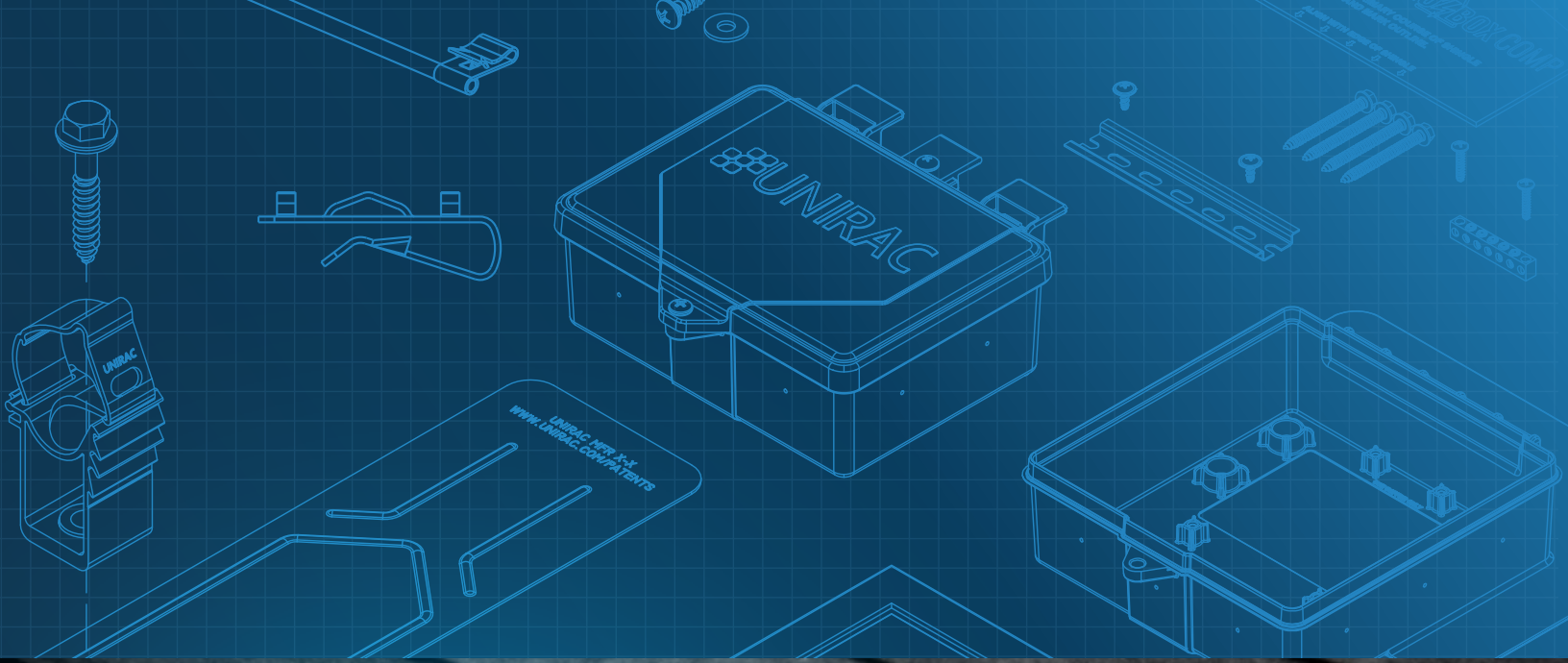

BOSS

ELECTRICAL ACCESSORIES BY UNIRAC

LAST UPDATE: 02.10.2025

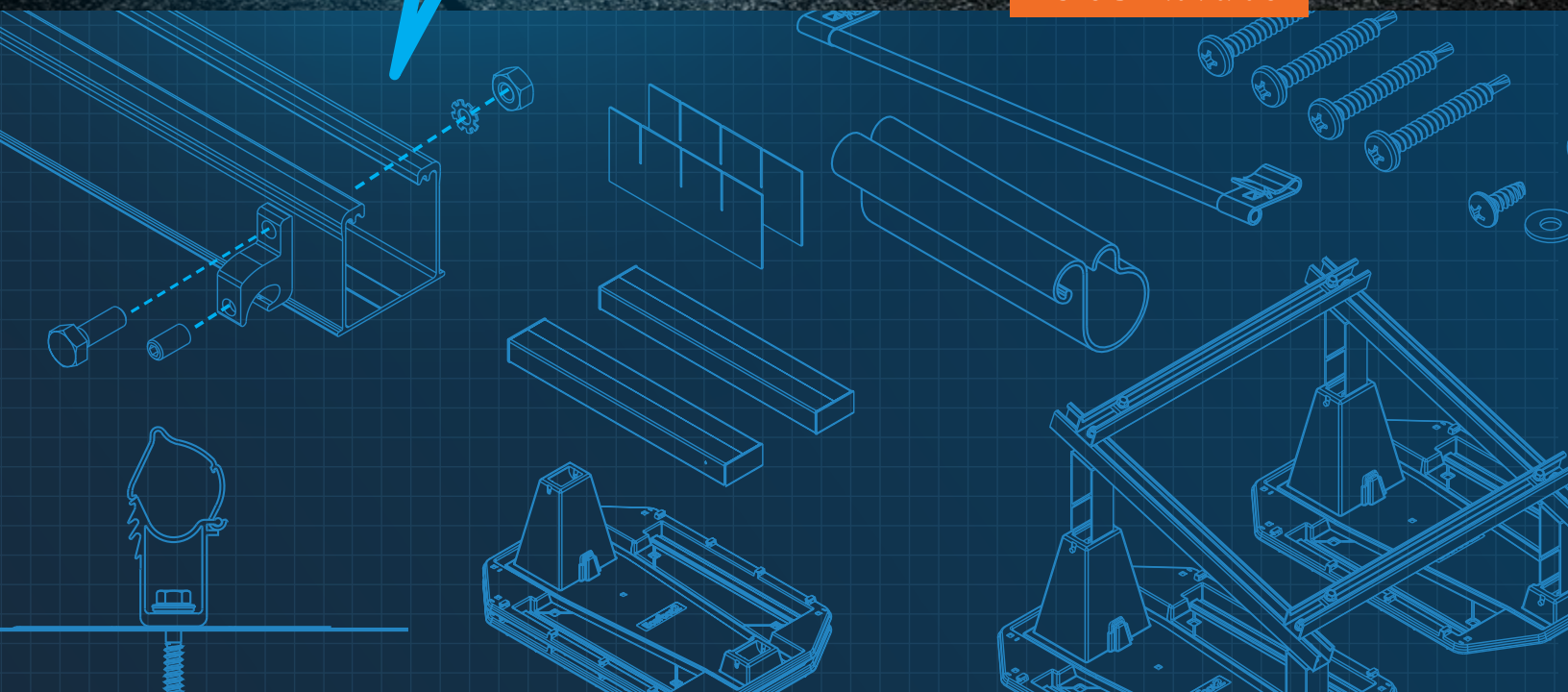

UNIRAC
UNIRAC NRTL X-Y
WWW.UNIRAC.COM/PATENTS

CONTENT GUIDE

RESIDENTIAL

SOLOBOX COMP 4
SOLOBOX RAIL 4
E-BOSS CONDUIT MOUNT 2.0 COMP KIT 5
E-BOSS COND MT 3.0 W/ BUTL KIT 5
E-BOSS TILE CONDUIT MOUNT KIT .. 5
E-BOSS BRIDGE CLIPS 6
E-BOSS BRIDGE TRAY 6
E-BOSS RAIL TRAY 6
ONE WIRE CLIP 8
TWO WIRE CLIP 8
HEYCO SUNRUNNER 2-S CLIP 100/B 8
HEYCO SUNRUNNER 4 CLIP 100/B 9
HEYCO SUNRUNNER 100/B 9
HEYCO SUNNRUNNER 2U CLIP 8
WIRE BND CLIP 9
GROUND WEEBLUG #1 10
GUARDIAN 11
GUARDIAN MESH 11

COMMERCIAL

ECOTRAY TRAY 96" 7
ECOTRAY TRAY BASE 6" 7
ECOTRAY CAP 96" 7
ECOTRAY RIVET 7
ECOFOOT 1 INVERTER KIT 10
ECOFOOT 2 INVERTER KIT 10

RESIDENTIAL & COMMERCIAL

MLPE MOUNT ASSY 9
MLPE TIGER CLIP 9
ILSO LAY IN LUG 11

ICON GUIDE

BOS & ELECTRICAL

AESTHETICS & PROTECTION

SOLOBOX™ COMP

PART NUMBER	SBOXCOMP-D
APPLICATION	
DESCRIPTION	PV-rated deck-mounted junction box solution for COMP shingle roofs.

FEATURES

- Built-in butyl tech for penetration protection and reliable installation
- No need for sealant!
- Integrated flashing preserves roof integrity
- 4 Layers of "Shed-and-Seal" weatherproofing
- Weather-Seal the Entire Enclosure with Just 1 Screw!
- The most innovatively designed and competitively priced J-box on the market

SOLOBOX™ RAIL

PART NUMBER	SBOXRAIL-D
APPLICATION	
DESCRIPTION	PV-rated rail-mounted junction box solution.

FEATURES

- Universal compatibility with all major rails
- Easy, single-screw installation & maintenance
- Self-leveling clamp protects your modules
- Most competitively priced
- Rail-mounted box on the market

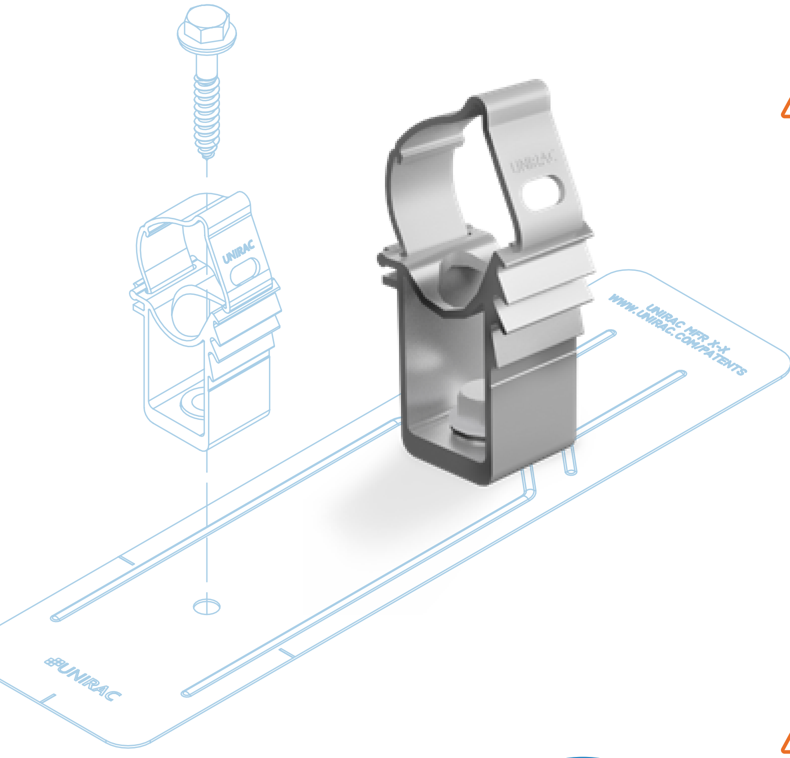

E-BOSS CONDUIT MOUNT 2.0 COMP KIT

PART NUMBER	00822CM
APPLICATION	
DESCRIPTION	Flashed conduit mount solution for COMP Shingle roofs.

FEATURES

- Click-in cap locks down to 1" or ¾" conduit
- Attach to rail with an L-foot or to the deck with FLASHKIT PRO SB
- Kitted parts. Flashing and hardware included.

E-BOSS COND MT 3.0 W/ BUTL KIT

PART NUMBER	CMBTLM1
APPLICATION	
DESCRIPTION	Polymeric flashing conduit mount solution for COMP shingle roofs.

FEATURES

- Efficiency amplified
- Designed for multiple conduit ranges
- Unirac cap technology – grabbing the bar!
- Everything you need in one box

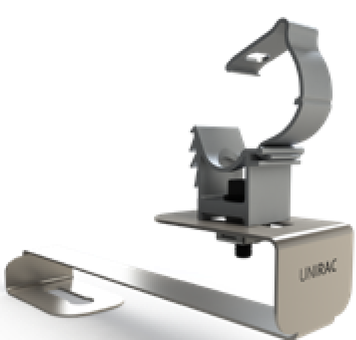

E-BOSS TILE CONDUIT MOUNT KIT

PART NUMBER	00823CM
APPLICATION	
DESCRIPTION	Conduit mount solution for tile roofs.

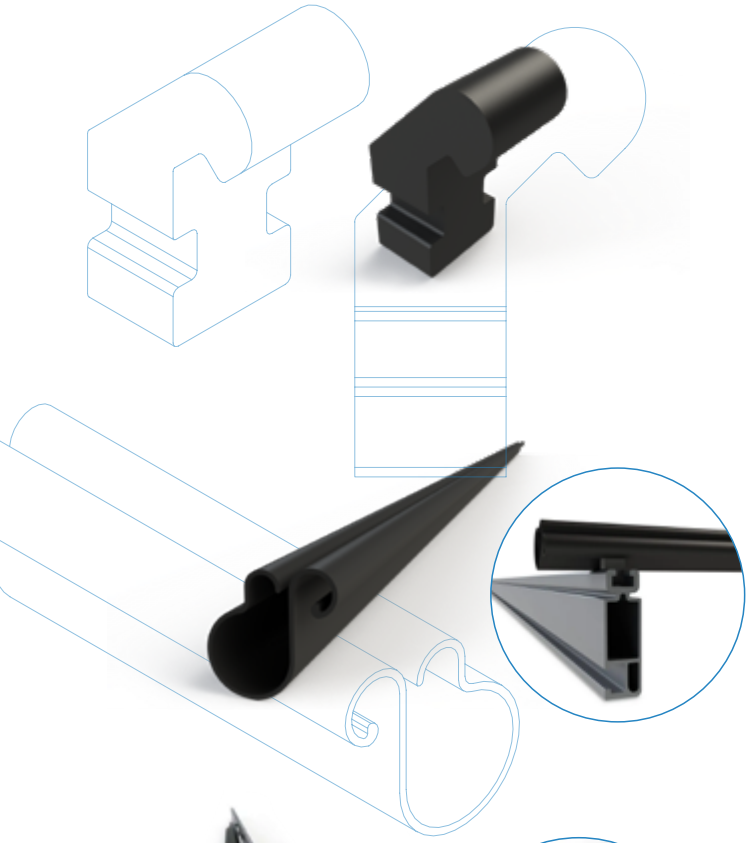

E-BOSS BRIDGE CLIPS

PART NUMBER	00802BC
APPLICATION	
DESCRIPTION	Clip connecting SolarTray Bridge Tray to rail.

E-BOSS BRIDGE TRAY

PART NUMBER	00802BT
APPLICATION	
DESCRIPTION	North-South rail-mounted wire management tray.

FEATURES

- Protect wires from critters and the elements
- Speed up installation and reduce service call backs
- Eliminate sagging wires, Improve aesthetics and increase curb appeal

E-BOSS RAIL TRAY

PART NUMBER	00802RT
APPLICATION	
DESCRIPTION	East-west rail-mounted wire management tray.

FEATURES

- Protect wires from critters and the elements
- Speed up installation and reduce service call backs
- Eliminate sagging wires, Improve aesthetics and increase curb appeal

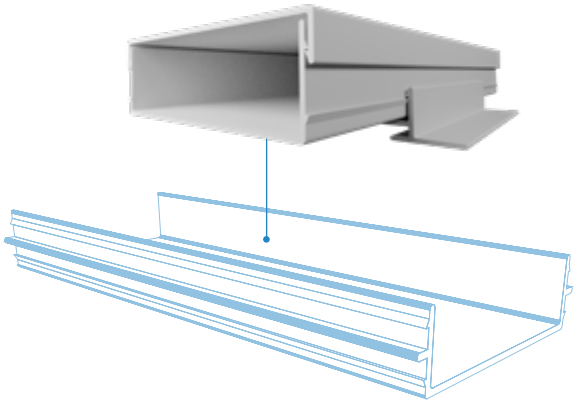

ECOTRAY TRAY 96”

PART NUMBER	ES10812
APPLICATION	
DESCRIPTION	96” ECOTRAY Tray for flat roof wire management raceway.

FEATURES

- Simple, easy to install
- Organize & protect your pv arrays
- An easy change in direction with the T-FITING or ELBOW

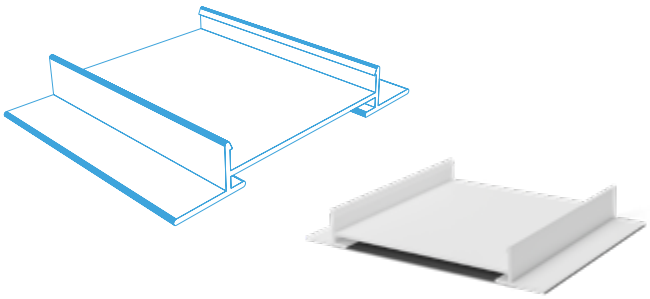

ECOTRAY BASE 6”

PART NUMBER	ES10810
APPLICATION	
DESCRIPTION	6” ECOTRAY Base for flat roof wire management raceway.

FEATURES

- Simple, easy to install
- Organize & protect your pv arrays
- An easy change in direction with the T-FITING or ELBOW

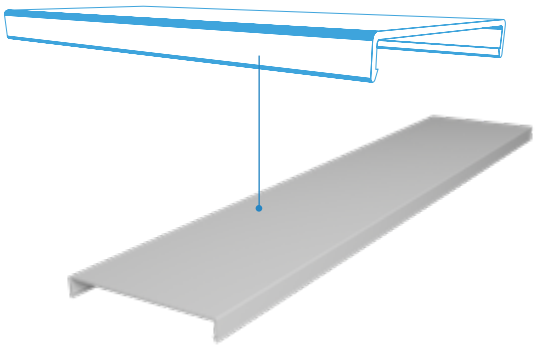

ECOTRAY CAP 96”

PART NUMBER	ES10811
APPLICATION	
DESCRIPTION	96” ECOTRAY CAP for flat roof wire manangement raceway.

FEATURES

- Simple, easy to install
- Organize & protect your PV arrays
- An easy change in direction with the T-FITING or ELBOW

ECOTRAY RIVET

PART NUMBER	ES10813
APPLICATION	
DESCRIPTION	ECOTRAY tray to base Rivet for flat roof wire manangement raceway.

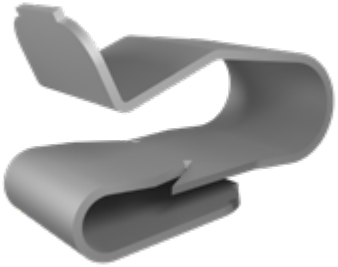

ONE WIRE CLIP, SS, DCS 1306

PART NUMBER	008003S
APPLICATION	
DESCRIPTION	Wire management clip for module return flange applications.

TWO WIRE CLIP, SS, DCS1 307

PART NUMBER	008004S
APPLICATION	
DESCRIPTION	Wire management clip for module return flange applications.

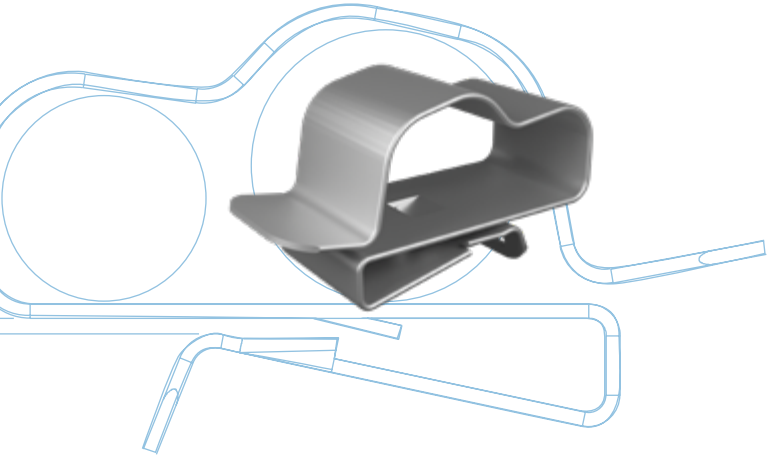

HEYCO SUNRUNNER 2-S CLIP 100/B

PART NUMBER	008017S
APPLICATION	
DESCRIPTION	Wire management clip for module return flange applications.

FEATURES

- Designed to hold Micro-Inverter Cables .413″(10,5 mm) to .472″(12,0 mm) and Module Cables up to .300″(7,6 mm) in diameter for rail-less mounting systems.
- Constructed from heat treated 410 stainless steel for excellent strength and corrosion protection for outdoor exposure.
- Smooth clip edges prevent damage to cable installation.
- Designed for panel and cable retention up to 15 lbs.
- Neatly dress cables on PV panels or module frames from .050″(1,3 mm) to 250″ (6,4 mm) thick.

HEYCO SUNRUNNER 4 CLIP 100/B

PART NUMBER	008020S
APPLICATION	
DESCRIPTION	Wire management clip for module return flange and/or on mounting system rail.

HEYCO SUNRUNNER 100/B

PART NUMBER	008019S
APPLICATION	
DESCRIPTION	Wire management clip for module return flange applications.

FEATURES

- Item Weight: 7 lb
- Dimensions (LxWxH): 12 x 4 x 4 inches

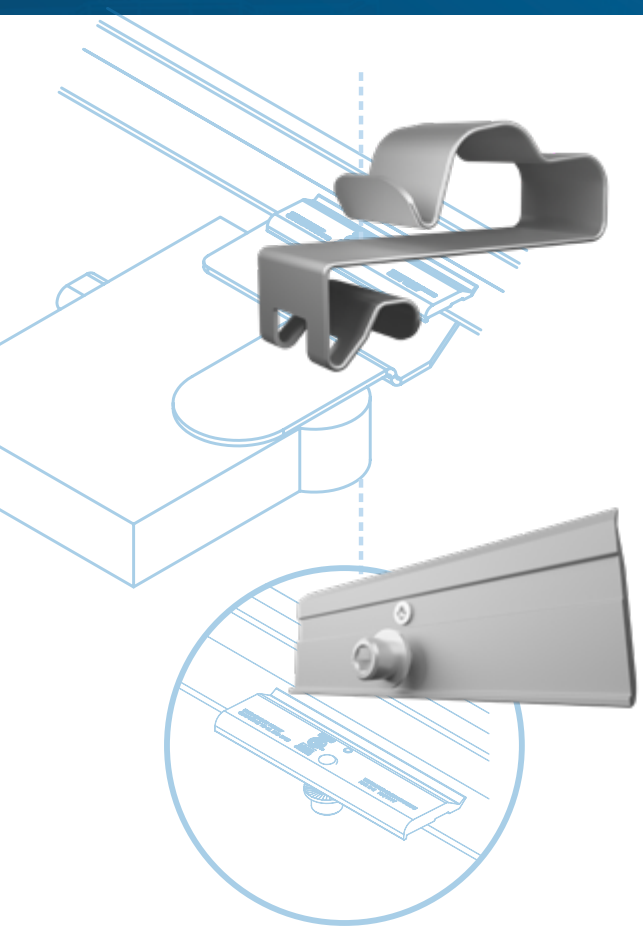

HEYCO SUNNRUNNER 2U CLIP

PART NUMBER	008018S
APPLICATION	
DESCRIPTION	Wire management clip for module return flange and/or on mounting system rail.

MLPE MOUNT ASSY

PART NUMBER	008114M
APPLICATION	
DESCRIPTION	Microinverter/optimizer mount for module return flange applications.

FEATURES

- Mount and bond to the frame
- Allows for pre-assembly on the ground
- UL2703 approved

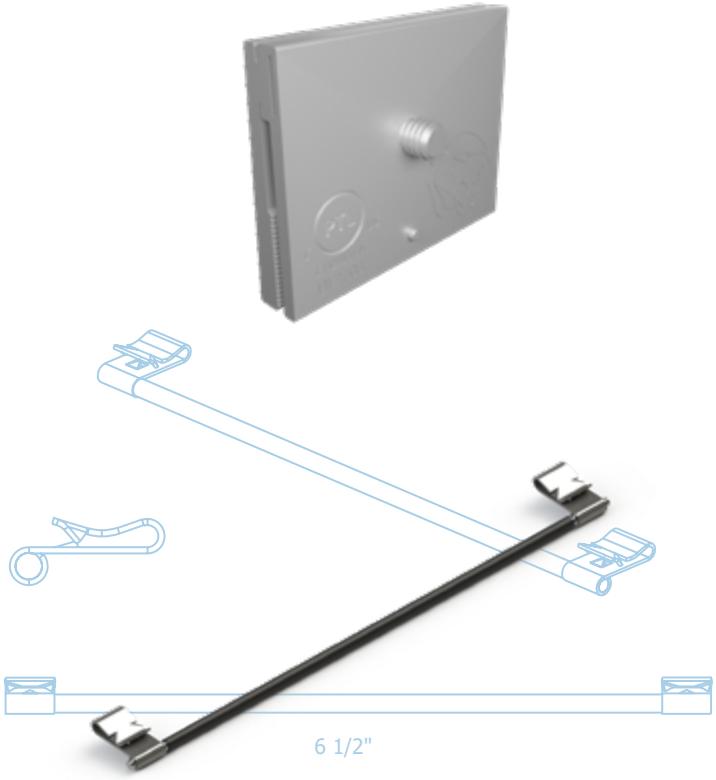

MLPE TIGER CLIP

PART NUMBER	008115M
APPLICATION	
DESCRIPTION	Microinverter/optimizer mount for module return flange applications.

FEATURES

- Mount and bond to the frame
- Allows for pre-assembly on the ground
- UL2703 approved

WIRE BND CLIP

PART NUMBER	008015S
APPLICATION	
DESCRIPTION	Bonding jumper for module-to-module bonding.

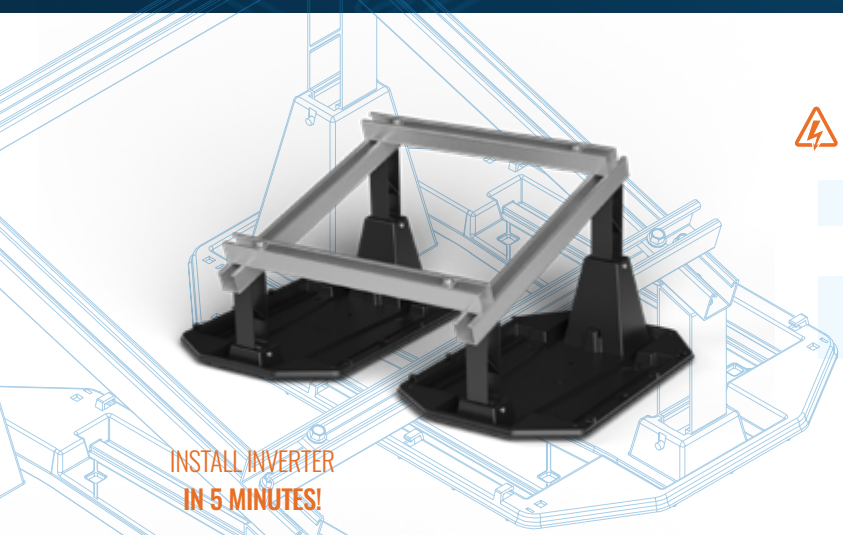

ECOFOOT 1 INVERTER KIT

PART NUMBER	ES20913
APPLICATION	
DESCRIPTION	Ballasted inverter mounting kit solution for flat roofs applications.

FEATURES

- Compact Design
- Flexible Deployment
- Simplified Logistics

ECOFOOT 2 INVERTER KIT

PART NUMBER	ES20914
APPLICATION	
DESCRIPTION	Ballasted inverter mounting kit solution for flat roofs applications.

FEATURES

- Mount 2 inverters on a low slope roof
- Combine mounts to support multiple inverters
- Compatible with all major pv inverter brands
- Streamline logistics for small and large projects

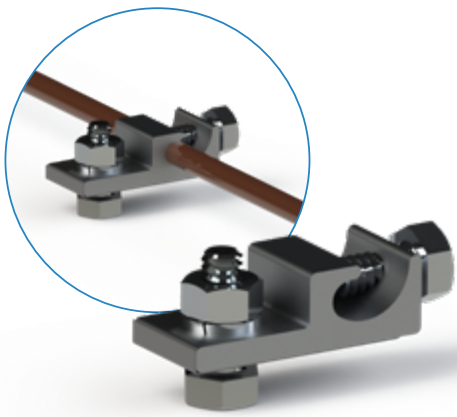

GROUND WEEBLUG #1

PART NUMBER	008002S
APPLICATION	
DESCRIPTION	Grounding Weeblug kit for rail applications.

FEATURES

- Comes with a tin-coated copper finish that prevents corrosion. Order two grounding lugs for each rail splice plus one additional lug per rail. Sold in quantities of one (1) each.

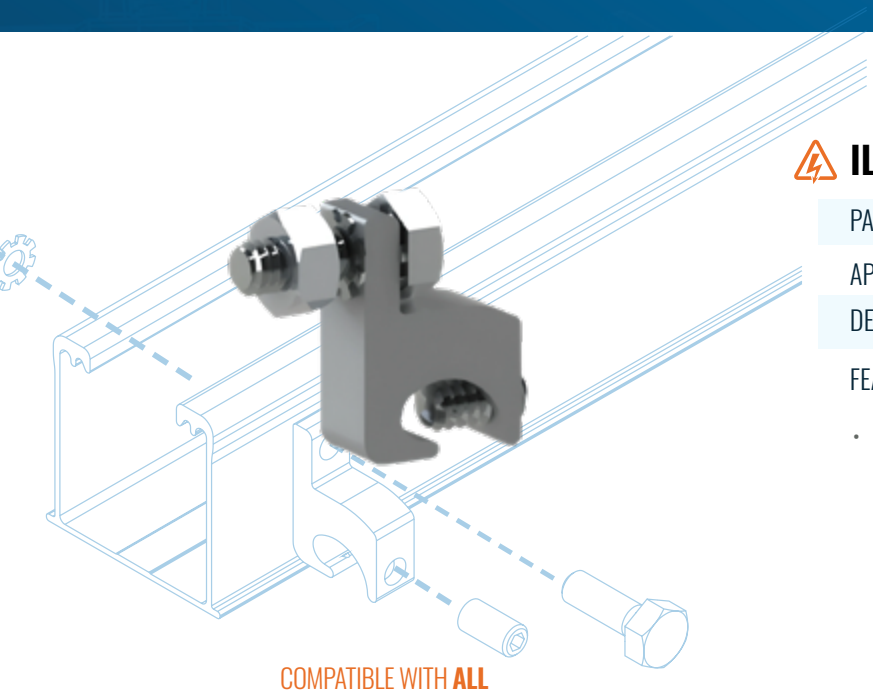

COMPATIBLE WITH **ALL** MAJOR SYSTEMS!

ILSCO LAY IN LUG

PART NUMBER	008009P
APPLICATION	
DESCRIPTION	Grounding Lay-In lug kit for rail applications.

FEATURES

- The ILSCO Lay-In Lug is a versatile component designed for ease of use and compatibility. This package includes a rail attachment bolt, nut, and star washer. Two of these units are recommended for installation per expansion joint, ensuring proper thermal break.

GUARDIAN

PART NUMBER	GUARD-CLP
APPLICATION	
DESCRIPTION	Clip for universal pest barrier for pitched roof PV Systems

FEATURES

- Effortless, tool-free installation in 3 easy steps: Clip, Cover & Cap!
- Reusable metal clip & plastic cap
- Long-lasting performance and color retention (UV resistant material)
- Tight, secure fit with flexible metal clip
- Versatile components

GUARDIAN MESH

PART NUMBER	5"in x 100'ft:	GUARD-M5
	6"in x 100'ft:	GUARD-M6
	8"in x 100'ft:	GUARD-M8
APPLICATION		
DESCRIPTION	Mesh for universal pest barrier for pitched roof PV Systems.	

UNIRAC

BETTER SOLAR STARTS HERE

SCAN FOR MORE

or visit: https://unirac.com/

CONNECT WITH US

UNIRACINC UNIRACSOLAR UNIRAC UNIRACSOLAR