Design Criteria for Span Tables:

Values in the maximum allowable rail span tables provided herein are subject to the following general criteria and additional criteria shown on individual span tables sheets. Values in span tables are based on the same engineering methodology and calculation algorithms used for U-Builder and are provided here for reference.

Building Assumptions

- Building Risk Category: II
- Mean Roof Height: 30 ft
- Roof Pitch: 0°-45°
- Site Elevation: 0 ft

Wind Design Assumptions

- Wind loads used are based on ASCE 7-22 Sec. 29.4.4
- Exposure Category B, C, or D
- Basic Wind Speed = 90 – 180 mph
- Level terrain. Topographic factor, kzt = 1.0
- γE = 1.0 for 'Interior' spans, γE = 1.5 for 'Exposed' spans (ASCE 7-22, Fig. 29.4-7)

Snow Design Assumptions

- Ground Snow Load = 0-100 psf
- Exposure Factor coefficients of Partially Exposed condition
- Thermal Factor = 1.0
- Results based on uniform snow load

Seismic Design Assumptions

- 0.2-s Spectral Response Acceleration
- S_S = 1.25 and 3 with Sds = 1, 2.4 respectively per criteria shown on individual span tables sheets.
- S_1 = 0.5 & Sd1 = 0.6
- Seismic site class D

Array Assumptions

- Module orientation and Rail direction per criteria shown on individual span tables sheets.
- Maximum module dimensions of 40.1" x 67" (~19 sq.ft, 47.65 lbs) and 41" x 80" (~23 sq.ft, 58.6 lbs) per criteria shown on individual span tables sheets.
- Minimum distance between modules and roof edge is at least twice the module height above roof surface.
- Modules are parallel to roof surface and maximum height above roof surface is 5" to 10" depending on attachment type.
- Gaps between module rows and columns is 0.25" in to 1" depending on clamp type.
- The most restrictive of all roof zone spans shall be used when any part of the module is attributed to that span.
- 'Exposed' spans as defined in ASCE 7-22 sec. 29.4.4 shall be used when any part of an exposed module or panel as is attributed to that span.

Span Tables

Zone should be considered as per ASCE 7-22, Fig. 30.3-2A to 30.3-2D

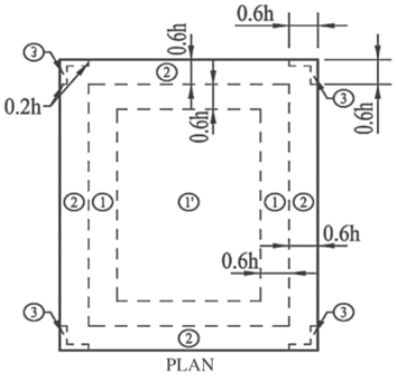

Gable Roofs θ ≤ 7°

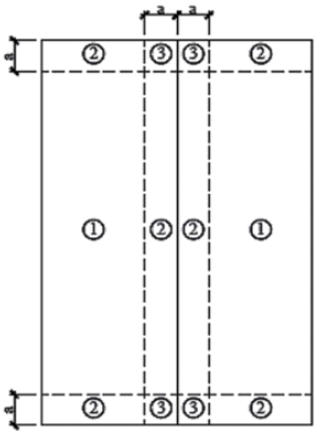

Gable Roofs 7°< θ ≤ 27°

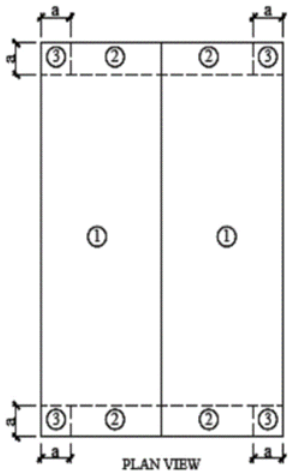

Gable Roofs 27°< θ ≤ 45°

Rails can be installed in these possible orientations.

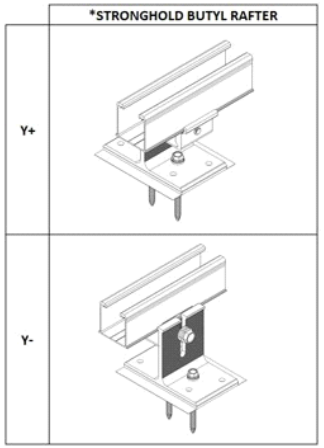

UNIRAC

ASCE 7-22	II	30 ft	Ss = 1.25	19 sq.ft	PORTRAIT	CROSS-SLOPE	NXT	NXT COMBO	Stronghold BUTYL Rafter #14S
Design Standard	Risk Category	Roof Height	Seismic	Module Area	Orientation	Rail Direction	Rail Type	Clamp	Attachment

SPAN TABLES

Maximum Allowable Rail Spans for Rooftop Solar Panels Parallel to the Roof Surface (inches)

Ground Snow Load (psf)	Wind Exposure Category	Roof Tilt Angle (deg)	Panel Exposure	Basic Wind Speed (mph)																																						
				90			95			100			105			110			115			120			130			140			150			160			170			180		
				Roof Wind Zone																																						
				1	2	3	1	2	3	1	2	3	1	2	3	1	2	3	1	2	3	1	2	3	1	2	3	1	2	3	1	2	3	1	2	3	1	2	3	1	2	3
0	B	0-7	Interior	86	86	86	86	86	86	86	86	83	86	86	80	86	86	77	86	84	74	86	81	71	86	76	67	81	71	63	76	67	60	72	64	56	69	61	51	66	58	44
			Exposed	86	86	77	86	83	73	86	80	70	86	76	67	83	74	65	80	71	63	78	69	61	73	64	56	68	61	51	65	57	42	62	53	37	59	47	32	55	40	43
		7-20	Interior	86	86	86	86	86	85	86	86	81	86	86	77	86	84	74	86	81	72	86	78	69	83	73	65	78	68	61	73	64	57	69	61	52	66	58	44	63	54	39
			Exposed	86	84	74	86	80	71	86	77	68	84	73	65	81	71	63	77	68	60	75	66	58	70	61	52	65	57	43	62	52	37	59	44	32	54	38	43	50	34	38
		20-27	Interior	87	87	87	87	87	87	87	87	87	87	87	84	87	87	81	87	84	78	87	81	75	87	75	70	86	71	66	81	67	62	77	63	59	73	60	54	70	57	50
			Exposed	87	87	80	87	83	77	87	79	73	87	76	70	87	73	68	86	70	65	83	68	63	77	63	59	73	60	54	69	55	46	65	51	39	62	42	34	59	37	31
		27-45	Interior	87	87	87	87	87	87	87	87	87	87	87	87	87	87	86	87	87	82	87	86	79	87	81	74	81	76	70	77	72	66	72	68	63	69	65	60	66	62	56
			Exposed	87	87	86	87	87	82	87	85	78	87	82	75	84	78	72	81	76	70	78	73	67	73	68	63	68	64	59	64	61	55	61	58	50	58	53	41	54	48	37
	C	0-7	Interior	86	86	78	86	85	75	86	81	72	86	78	69	85	75	66	82	72	64	79	70	62	74	66	58	70	62	53	66	59	45	63	54	39	60	50	34	57	43	30
			Exposed	85	75	66	81	72	63	78	69	61	75	66	59	72	64	55	70	62	52	67	60	48	63	55	39	60	49	33	55	41	44	51	36	38	43	31	34	38	42	30
		7-20	Interior	86	86	76	86	82	72	86	78	69	86	75	67	82	72	64	79	69	62	76	67	60	71	63	54	67	59	47	63	54	39	60	48	34	56	41	30	52	36	40
			Exposed	82	72	64	78	69	61	75	66	59	72	63	55	69	61	52	67	59	46	64	56	41	60	49	34	55	40	30	51	35	39	41	30	34	36	40	30	32	36	27
		20-27	Interior	87	87	82	87	85	79	87	81	75	87	78	72	87	75	69	87	72	67	85	69	64	79	65	60	74	61	55	70	57	51	67	52	41	63	45	36	61	39	32
			Exposed	87	75	69	87	71	66	83	68	63	80	65	61	77	63	58	74	61	55	71	59	52	67	53	42	63	44	36	60	37	31	55	33	41	51	44	36	44	39	32
		27-45	Interior	87	87	87	87	87	83	87	87	80	87	83	77	86	80	74	83	77	71	80	75	69	74	70	64	70	66	61	66	62	57	62	59	52	59	55	44	56	51	39
			Exposed	86	80	74	82	77	70	78	73	67	75	71	65	72	68	62	69	66	60	67	63	58	63	59	52	59	55	43	54	49	37	48	41	33	40	36	43	36	32	39
	D	0-7	Interior	86	83	73	86	79	70	86	76	67	82	73	64	79	70	62	76	68	60	74	65	57	69	61	52	65	58	42	62	53	37	59	47	32	55	40	43	51	36	38
			Exposed	79	70	62	76	67	59	73	64	56	70	62	52	67	60	48	65	57	42	63	54	38	59	47	33	54	39	42	48	34	37	41	30	32	36	40	28	32	35	25
		7-20	Interior	86	80	70	86	76	67	83	73	64	80	70	62	76	67	60	73	65	57	71	62	54	66	58	45	62	53	38	59	45	33	54	38	43	49	34	38	41	30	34
			Exposed	76	67	59	73	64	56	70	61	52	67	59	46	64	56	41	62	52	37	60	48	34	54	39	43	48	33	37	39	43	32	34	38	28	30	34	25	41	30	22
		20-27	Interior	87	83	76	87	79	73	87	75	70	87	72	67	85	69	64	81	67	62	79	64	60	73	60	55	69	56	47	65	51	39	62	42	34	59	37	30	55	33	41
			Exposed	84	69	64	81	66	61	77	63	59	74	61	55	71	59	52	69	55	46	66	52	41	62	42	35	59	36	30	54	31	39	48	41	34	41	36	30	36	32	27
		27-45	Interior	87	87	81	87	84	78	87	81	74	83	78	71	80	75	69	77	72	66	74	69	64	69	65	60	65	61	55	61	58	50	58	53	41	53	48	36	48	41	32
			Exposed	80	74	68	76	71	66	73	68	63	70	66	60	67	63	58	65	61	55	62	59	52	58	54	42	53	47	36	44	39	31	38	34	41	34	30	36	30	41	32
10	B	0-7	Interior	77	77	77	77	77	77	77	77	77	77	77	77	77	77	77	77	77	74	77	77	71	77	76	67	77	71	63	76	67	60	72	64	56	69	61	51	66	58	44
			Exposed	77	77	77	77	77	73	77	77	70	77	76	67	77	74	65	77	71	63	77	69	61	73	64	56	68	61	51	65	57	42	62	53	37	59	47	32	55	40	43
		7-20	Interior	78	78	78	78	78	78	78	78	78	78	78	77	78	78	74	78	78	72	78	78	69	78	73	65	78	68	61	73	64	57	69	61	52	66	58	44	63	54	39
			Exposed	78	78	74	78	78	71	78	77	68	78	73	65	78	71	63	77	68	60	75	66	58	70	61	52	65	57	43	62	52	37	59	44	32	54	38	43	50	34	38
		20-27	Interior	83	83	83	83	83	83	83	83	83	83	83	83	83	83	81	83	83	78	83	81	75	83	75	70	83	71	66	81	67	62	77	63	59	73	60	54	70	57	50
			Exposed	83	83	80	83	83	77	83	79	73	83	76	70	83	73	68	83	70	65	83	68	63	77	63	59	73	60	54	69	55	46	65	51	39	62	42	34	59	37	31
		27-45	Interior	86	86	86	86	86	86	86	86	86	86	86	86	86	86	86	86	86	82	86	86	79	86	81	74	81	76	70	77	72	66	72	68	63	69	65	60	66	62	56
			Exposed	86	86	86	86	86	82	86	85	78	86	82	75	84	78	72	81	76	70	78	73	67	73	68	63	68	64	59	64	61	55	61	58	50	58	53	41	54	48	37
	C	0-7	Interior	77	77	77	77	77	75	77	77	72	77	77	69	77	75	66	77	72	64	77	70	62	74	66	58	70	62	53	66	59	45	63	54	39	60	50	34	57	43	30
			Exposed	77	75	66	77	72	63	77	69	61	75	66	59	72	64	55	70	62	52	67	60	48	63	55	39	60	49	33	55	41	44	51	36	38	43	31	34	38	42	30
		7-20	Interior	78	78	76	78	78	72	78	78	69	78	75	67	78	72	64	78	69	62	76	67	60	71	63	54	67	59	47	63	54	39	60	48	34	56	41	30	52	36	40
			Exposed	78	72	64	78	69	61	75	66	59	72	63	55	69	61	52	67	59	46	64	56	41	60	49	34	55	40	30	51	35	39	41	30	34	36	40	30	32	36	27
		20-27	Interior	83	83	82	83	83	79	83	81	75	83	78	72	83	75	69	83	72	67	83	69	64	79	65	60	74	61	55	70	57	51	67	52	41	63	45	36	61	39	32
			Exposed	83	75	69	83	71	66	83	68	63	80	65	61	77	63	58	74	61	55	71	59	52	67	53	42	63	44	36	60	37	31	55	33	41	51	44	36	44	39	32
		27-45	Interior	86	86	86	86	86	83	86	86	80	86	83	77	86	80	74	83	77	71	80	75	69	74	70	64	70	66	61	66	62	57	62	59	52	59	55	44	56	51	39
			Exposed	86	80	74	82	77	70	78	73	67	75	71	65	72	68	62	69	66	60	67	63	58	63	59	52	59	55	43	54	49	37	48	41	33	40	36	43	36	32	39
	D	0-7	Interior	77	77	73	77	77	70	77	76	67	77	73	64	77	70	62	76	68	60	74	65	57	69	61	52	65	58	42	62	53	37	59	47	32	55	40	43	51	36	38
			Exposed	77	70	62	76	67	59	73	64	56	70	62	52	67	60	48	65	57	42	63	54	38	59	47	33	54	39	42	48	34	37	41	30	32	36	40	28	32	35	25
		7-20	Interior	78	78	70	78	76	67	78	73	64	78	70	62	76	67	60	73	65	57	71	62	54	66	58	45	62	53	38	59	45	33	54	38	43	49	34	38	41	30	34
			Exposed	76	67	59	73	64	56	70	61	52	67	59	46	64	56	41	62	52	37	60	48	34	54	39	43	48	33	37	39	43	32	34	38	28	30	34	25	41	30	22
		20-27	Interior	84	83	76	84	79	73	84	75	70	84	72	67	84	69	64	81	67	62	79	64	60	73	60	55	69	56	47	65	51	39	62	42	34	59	37	30	55	33	41
			Exposed	84	69	64	81	66	61	77	63	59	74	61	55	71	59	52	69	55	46	66	52	41	62	42	35	59	36	30	54	31	39	48	41	34	41	36	30	36	32	27
		27-45	Interior	87	87	81	87	84	78	87	81	74	83	78	71	80	75	69	77	72	66	74	69	64	69	65	60	65	61	55	61	58	50	58	53	41	53	48	36	48	41	32
			Exposed	80	74	68	76	71	66	73	68	63	70	66	60	67	63	58	65	61	55	62	59	52	58	54	42	53	47	36	44	39	31	38	34	41	34	30	36	30	41	32
20	B	0-7	Interior	67	67	67	67	67	67	67	67	67	67	67	67	67	67	67	67	67	67	67	67	67	67	67	67	67	67	63	67	67	60	67	64	56	67	61	51	66	58	44
			Exposed	67	67	67	67	67	67	67	67	67	67	67	67	67	67	65	67	67	63	67	67	61	67	64	56	67	61	51	65	57	42	62	53	37	59	47	32	55	40	43
		7-20	Interior	67	67	67	67	67	67	67	67	67	67	67	67	67	67	67	67	67	67	67	67	67	67	67	67	67	67	61	67	64	57	67	61	52	66	58	44	63	54	39
			Exposed	67	67	67	67	67	67	67	67	67	67	67	65	67	67	63	67	67	60	67	66	58	67	61	52	65	57	43	62	52	37	59	44	32	54	38	43	50	34	38
		20-27	Interior	74	74	74	74	74	74	74	74	74	74	74	74	74	74	74	74	74	74	74	74	74	74	74	70	74	71	66	74	67	62	74	63	59	73	60	54	70	57	50
			Exposed	74	74	74	74	74	74	74	74	73	74	74	70	74	73	68	74	70	65	74	68	63	74	63	59	73	60	54	69	55	46	65	51	39	62	42	34	59	37	31
		27-45	Interior	78	78	78	78	78	78	78	78	78	78	78	78	78	78	78	78	78	78	78	78	78	78	78	74	78	76	70	77	72	66	72	68	63	69	65	60	66	62	56
			Exposed	78	78	78	78	78	78	78	78	78	78	78	75	78	78	72	78	76	70	78	73	67	73	68	63	68	64	59	64	61	55	61	58	50	58	53	41	54	48	37
	C	0-7	Interior	67	67	67	67	67	67	67	67	67	67	67	67	67	67	66	67	67	64	67	67	62	67	66	58	67	62	53	66	59	45	63	54	39	60	50	34	57	43	30
			Exposed	67	67	66	67	67	63	67	67	61	67	66	59	67	64	55	67	62	52	67	60	48	63	55	39	60	49	33	55	41	44	51	36	38	43	31	34	38	42	30
		7-20	Interior	67	67	67	67	67	67	67	67	67	67	67	67	67	67	64	67	67	62	67	67	60	67	63	54	67	59	47	63	54	39	60	48	34	56	41	30	52	36	40
			Exposed	67	67	64	67	67	61	67	66	59	67	63	55	67	61	52	67	59	46	64	56	41	60	49	34	55	40	30	51	35	39	41	30	34	36	40	30	32	36	27
		20-27	Interior	74	74	74	74	74	74	74	74	74	74	74	72	74	74	69	74	72	67	74	69	64	74	65	60	74	61	55	70	57	51	67	52	41	63	45	36	61	39	32
			Exposed	74	74	69	74	71	66	74	68	63	74	65	61	74	63	58	74	61	55	71	59	52	67	53	42	63	44	36	60	37	31	55	33	41	51	44	36	44	39	32
		27-45	Interior	78	78	78	78	78	78	78	78	78	78	78	77	78	78	74	78	77	71	78	75	69	74	70	64	70	66	61	66	62	57	62	59	52	59	55	44	56	51	39
			Exposed	78	78	74	78	77	70	78	73	67	75	71	65	72	68	62	69	66	60	67	63	58	63	59	52	59	55	43	54	49	37	48	41	33	40	36	43	36	32	39
	D	0-7	Interior	67	67	67	67	67	67	67	67	67	67	67	64	67	67	62	67	67	60	67	65	57	67	61	52	65	58	42	62	53	37	59	47	32	55	40	43	51	36	38
			Exposed	67	67	62	67	67	59	67	64	56	67	62	52	67	60	48	65	57	42	63	54	38	59	47	33	54	39	42	48	34	37	41	30	32	36	40	28	32	35	25
		7-20	Interior	67	67	67	67	67	67	67	67	64	67	67	62	67	67	60	67	65	57	67	62	54	66	58	45	62	53	38	59	45	33	54	38	43	49	34	38	41	30	34
			Exposed	67	67	59	67	64	56	67	61	52	67	59	46	64	56	41	62	52	37	60	48	34	54	39	43	48	33	37	39	43	32	34	38	28	30	34	25	41	30	22
		20-27	Interior	75	75	75	75	75	73	75	75	70	75	72	67	75	69	64	75	67	62	75	64	60	73	60	55	69	56	47	65	51	39	62	42	34	59	37	30	55	33	41
			Exposed	75	69	64	75	66	61	75	63	59	74	61	55	71	59	52	69	55	46	66	52	41	62	42	35	59	36	30	54	31	39	48	41	34	41	36	30	36	32	27
		27-45	Interior	79	79	79	79	79	78	79	79	74	79	78	71	79	75	69	77	72	66	74	69	64	69	65	60	65	61	55	61	58	50	58	53	41	53	48	36	48	41	32
			Exposed	79	74	68	76	71	66	73	68	63	70	66	60	67	63	58	65	61	55	62	59	52	58	54	42	53	47	36	44	39	31	38	34	41	34	30	36	30	41	32

* Cells with an astrisks indicates that the L-foot must be oriented in the Y- direction as indicated in the image.

10 Highlighted cell indicate 3-rail system span. Contact Unirac Engineering Services for support.

~~10~~ Highlighted cell with strikethrough indicate 3-rail system span and module clamp allowable capacity exceeds with 3-rails. 4-Rail system required. Contact Unirac Engineering Services for support.

UNIRAC

ASCE 7-22	II	30 ft	Ss = 1.25	19 sq.ft	PORTRAIT	CROSS-SLOPE	NXT	NXT COMBO	Stronghold BUTYL Rafter #14S
Design Standard	Risk Category	Roof Height	Seismic	Module Area	Orientation	Rail Direction	Rail Type	Clamp	Attachment

SPAN TABLES

Maximum Allowable Rail Spans for Rooftop Solar Panels Parallel to the Roof Surface (inches)

Ground Snow Load (psf)	Wind Exposure Category	Roof Tilt Angle (deg)	Panel Exposure	Basic Wind Speed (mph)																																						
				90			95			100			105			110			115			120			130			140			150			160			170			180		
				Roof Wind Zone																																						
				1	2	3	1	2	3	1	2	3	1	2	3	1	2	3	1	2	3	1	2	3	1	2	3	1	2	3	1	2	3	1	2	3	1	2	3	1	2	3
30	B	0-7	Interior	59	59	59	59	59	59	59	59	59	59	59	59	59	59	59	59	59	59	59	59	59	59	59	59	59	59	59	59	59	59	59	59	56	59	59	51	59	58	44
			Exposed	59	59	59	59	59	59	59	59	59	59	59	59	59	59	59	59	59	59	59	59	59	59	59	56	59	59	51	59	57	42	59	53	37	59	47	32	55	40	43
		7-20	Interior	60	60	60	60	60	60	60	60	60	60	60	60	60	60	60	60	60	60	60	60	60	60	60	60	60	60	60	60	60	57	60	60	52	60	58	44	59	54	39
			Exposed	60	60	60	60	60	60	60	60	60	60	60	60	60	60	60	60	60	60	60	60	58	60	60	52	60	57	43	60	52	37	59	44	32	54	38	43	50	34	38
		20-27	Interior	67	67	67	67	67	67	67	67	67	67	67	67	67	67	67	67	67	67	67	67	67	67	67	67	67	67	66	67	67	62	67	63	59	67	60	54	66	57	50
			Exposed	67	67	67	67	67	67	67	67	67	67	67	67	67	67	67	67	67	65	67	67	63	67	63	59	67	60	54	67	55	46	65	51	39	62	42	34	59	37	31
		27-45	Interior	71	71	71	71	71	71	71	71	71	71	71	71	71	71	71	71	71	71	71	71	71	71	71	71	71	71	70	70	70	66	68	68	63	66	65	60	64	62	56
			Exposed	71	71	71	71	71	71	71	71	71	71	71	71	71	71	71	71	71	70	71	71	67	71	68	63	68	64	59	64	61	55	61	58	50	58	53	41	54	48	37
	C	0-7	Interior	59	59	59	59	59	59	59	59	59	59	59	59	59	59	59	59	59	59	59	59	59	59	59	58	59	59	53	59	59	45	59	54	39	59	50	34	57	43	30
			Exposed	59	59	59	59	59	59	59	59	59	59	59	59	59	59	55	59	59	52	59	59	48	59	55	39	59	49	33	55	41	44	51	36	38	43	31	34	38	42	30
		7-20	Interior	60	60	60	60	60	60	60	60	60	60	60	60	60	60	60	60	60	60	60	60	60	60	60	54	60	59	47	59	54	39	58	48	34	56	41	30	52	36	40
			Exposed	60	60	60	60	60	60	60	60	59	60	60	55	60	60	52	60	59	46	60	56	41	60	49	34	55	40	30	51	35	39	41	30	34	36	40	30	32	36	27
		20-27	Interior	67	67	67	67	67	67	67	67	67	67	67	67	67	67	67	67	67	67	67	67	64	67	65	60	67	61	55	67	57	51	65	52	41	63	45	36	61	39	32
			Exposed	67	67	67	67	67	66	67	67	63	67	65	61	67	63	58	67	61	55	67	59	52	67	53	42	63	44	36	60	37	31	55	33	41	51	44	36	44	39	32
		27-45	Interior	71	71	71	71	71	71	71	71	71	71	71	71	71	71	71	71	71	71	71	71	69	69	69	64	67	66	61	64	62	57	62	59	52	59	55	44	56	51	39
			Exposed	71	71	71	71	71	70	71	71	67	71	71	65	71	68	62	69	66	60	67	63	58	63	59	52	59	55	43	54	49	37	48	41	33	40	36	43	36	32	39
	D	0-7	Interior	59	59	59	59	59	59	59	59	59	59	59	59	59	59	59	59	59	59	59	59	57	59	59	52	59	58	42	59	53	37	59	47	32	55	40	43	51	36	38
			Exposed	59	59	59	59	59	59	59	59	56	59	59	52	59	59	48	59	57	42	59	54	38	59	47	33	54	39	42	48	34	37	41	30	32	36	40	28	32	35	25
		7-20	Interior	60	60	60	60	60	60	60	60	60	60	60	60	60	60	60	60	60	57	60	60	54	60	58	45	59	53	38	57	45	33	54	38	43	49	34	38	41	30	34
			Exposed	60	60	59	60	60	56	60	60	52	60	59	46	60	56	41	60	52	37	60	48	34	54	39	43	48	33	37	39	43	32	34	38	28	30	34	25	41	30	22
		20-27	Interior	69	69	69	69	69	69	69	69	69	69	69	67	69	69	64	69	67	62	69	64	60	69	60	55	68	56	47	65	51	39	62	42	34	59	37	30	55	33	41
			Exposed	69	69	64	69	66	61	69	63	59	69	61	55	69	59	52	69	55	46	66	52	41	62	42	35	59	36	30	54	31	39	48	41	34	41	36	30	36	32	27
		27-45	Interior	73	73	73	73	73	73	73	73	73	73	73	71	73	73	69	72	72	66	71	69	64	68	65	60	65	61	55	61	58	50	58	53	41	53	48	36	48	41	32
			Exposed	73	73	68	73	71	66	73	68	63	70	66	60	67	63	58	65	61	55	62	59	52	58	54	42	53	47	36	44	39	31	38	34	41	34	30	36	30	41	32
40	B	0-7	Interior	57	57	57	57	57	57	57	57	57	57	57	57	57	57	57	57	57	57	57	57	57	57	57	57	57	57	57	57	57	57	57	57	56	57	57	51	57	57	44
			Exposed	57	57	57	57	57	57	57	57	57	57	57	57	57	57	57	57	57	57	57	57	57	57	57	56	57	57	51	57	57	42	57	53	37	57	47	32	55	40	43
		7-20	Interior	58	58	58	58	58	58	58	58	58	58	58	58	58	58	58	58	58	58	58	58	58	58	58	58	58	58	58	58	58	57	58	58	52	58	58	44	57	54	39
			Exposed	58	58	58	58	58	58	58	58	58	58	58	58	58	58	58	58	58	58	58	58	58	58	58	52	58	57	43	58	52	37	58	44	32	54	38	43	50	34	38
		20-27	Interior	62	62	62	62	62	62	62	62	62	62	62	62	62	62	62	62	62	62	62	62	62	62	62	62	62	62	62	62	62	62	62	62	59	62	60	54	61	57	50
			Exposed	62	62	62	62	62	62	62	62	62	62	62	62	62	62	62	62	62	62	62	62	62	62	62	59	62	60	54	62	55	46	62	51	39	62	42	34	59	37	31
		27-45	Interior	66	66	66	66	66	66	66	66	66	66	66	66	66	66	66	66	66	66	66	66	66	66	66	66	66	66	66	65	65	65	64	64	63	62	62	60	60	60	56
			Exposed	66	66	66	66	66	66	66	66	66	66	66	66	66	66	66	66	66	66	66	66	66	66	66	63	66	64	59	64	61	55	61	58	50	58	53	41	54	48	37
	C	0-7	Interior	57	57	57	57	57	57	57	57	57	57	57	57	57	57	57	57	57	57	57	57	57	57	57	57	57	57	53	57	57	45	57	54	39	57	50	34	57	43	30
			Exposed	57	57	57	57	57	57	57	57	57	57	57	57	57	57	55	57	57	52	57	57	48	57	55	39	57	49	33	55	41	44	51	36	38	43	31	34	38	42	30
		7-20	Interior	58	58	58	58	58	58	58	58	58	58	58	58	58	58	58	58	58	58	58	58	58	58	58	54	58	58	47	57	54	39	56	48	34	55	41	30	52	36	40
			Exposed	58	58	58	58	58	58	58	58	58	58	58	55	58	58	52	58	58	46	58	56	41	58	49	34	55	40	30	51	35	39	41	30	34	36	40	30	32	36	27
		20-27	Interior	62	62	62	62	62	62	62	62	62	62	62	62	62	62	62	62	62	62	62	62	62	62	62	60	62	61	55	61	57	51	60	52	41	58	45	36	57	39	32
			Exposed	62	62	62	62	62	62	62	62	62	62	62	61	62	62	58	62	61	55	62	59	52	62	53	42	62	44	36	60	37	31	55	33	41	51	44	36	44	39	32
		27-45	Interior	66	66	66	66	66	66	66	66	66	66	66	66	66	66	66	66	66	66	66	66	66	64	64	64	62	62	61	60	60	57	58	58	52	56	55	44	54	51	39
			Exposed	66	66	66	66	66	66	66	66	66	66	66	65	66	66	62	66	66	60	66	63	58	63	59	52	59	55	43	54	49	37	48	41	33	40	36	43	36	32	39
	D	0-7	Interior	59	59	59	59	59	59	59	59	59	59	59	59	59	59	59	59	59	59	59	59	57	59	59	52	59	58	42	59	53	37	59	47	32	55	40	43	51	36	38
			Exposed	59	59	59	59	59	59	59	59	56	59	59	52	59	59	48	59	57	42	59	54	38	59	47	33	54	39	42	48	34	37	41	30	32	36	40	28	32	35	25
		7-20	Interior	60	60	60	60	60	60	60	60	60	60	60	60	60	60	60	60	60	57	60	60	54	60	58	45	59	53	38	57	45	33	54	38	43	49	34	38	41	30	34
			Exposed	60	60	59	60	60	56	60	60	52	60	59	46	60	56	41	60	52	37	60	48	34	54	39	43	48	33	37	39	43	32	34	38	28	30	34	25	41	30	22
		20-27	Interior	64	64	64	64	64	64	64	64	64	64	64	64	64	64	64	64	64	62	64	64	60	64	60	55	63	56	47	61	51	39	60	42	34	58	37	30	55	33	41
			Exposed	64	64	64	64	64	61	64	63	59	64	61	55	64	59	52	64	55	46	64	52	41	62	42	35	59	36	30	54	31	39	48	41	34	41	36	30	36	32	27
		27-45	Interior	68	68	68	68	68	68	68	68	68	68	68	68	68	68	68	67	67	66	66	66	64	64	64	60	61	61	55	59	58	50	57	53	41	53	48	36	48	41	32
			Exposed	68	68	68	68	68	66	68	68	63	68	66	60	67	63	58	65	61	55	62	59	52	58	54	42	53	47	36	44	39	31	38	34	41	34	30	36	30	41	32
50	B	0-7	Interior	53	53	53	53	53	53	53	53	53	53	53	53	53	53	53	53	53	53	53	53	53	53	53	53	53	53	53	53	53	53	53	53	53	53	53	51	53	53	44
			Exposed	53	53	53	53	53	53	53	53	53	53	53	53	53	53	53	53	53	53	53	53	53	53	53	53	53	53	51	53	53	42	53	53	37	53	47	32	53	40	43
		7-20	Interior	53	53	53	53	53	53	53	53	53	53	53	53	53	53	53	53	53	53	53	53	53	53	53	53	53	53	53	53	53	53	53	53	52	53	53	44	53	53	39
			Exposed	53	53	53	53	53	53	53	53	53	53	53	53	53	53	53	53	53	53	53	53	53	53	53	52	53	53	43	53	52	37	53	44	32	53	38	43	50	34	38
		20-27	Interior	58	58	58	58	58	58	58	58	58	58	58	58	58	58	58	58	58	58	58	58	58	58	58	58	58	58	58	58	58	58	58	58	58	58	58	54	57	57	50
			Exposed	58	58	58	58	58	58	58	58	58	58	58	58	58	58	58	58	58	58	58	58	58	58	58	58	58	58	54	58	55	46	58	51	39	58	42	34	57	37	31
		27-45	Interior	62	62	62	62	62	62	62	62	62	62	62	62	62	62	62	62	62	62	62	62	62	62	62	62	62	62	62	61	61	61	60	60	60	58	58	58	57	57	56
			Exposed	62	62	62	62	62	62	62	62	62	62	62	62	62	62	62	62	62	62	62	62	62	62	62	62	62	62	59	61	61	55	60	58	50	58	53	41	54	48	37
	C	0-7	Interior	53	53	53	53	53	53	53	53	53	53	53	53	53	53	53	53	53	53	53	53	53	53	53	53	53	53	53	53	53	45	53	53	39	53	50	34	53	43	30
			Exposed	53	53	53	53	53	53	53	53	53	53	53	53	53	53	53	53	53	52	53	53	48	53	53	39	53	49	33	53	41	44	51	36	38	43	31	34	38	42	30
		7-20	Interior	53	53	53	53	53	53	53	53	53	53	53	53	53	53	53	53	53	53	53	53	53	53	53	53	53	53	47	53	53	39	52	48	34	51	41	30	50	36	40
			Exposed	53	53	53	53	53	53	53	53	53	53	53	53	53	53	52	53	53	46	53	53	41	53	49	34	53	40	30	51	35	39	41	30	34	36	40	30	32	36	27
		20-27	Interior	58	58	58	58	58	58	58	58	58	58	58	58	58	58	58	58	58	58	58	58	58	58	58	58	58	58	55	57	57	51	56	52	41	55	45	36	54	39	32
			Exposed	58	58	58	58	58	58	58	58	58	58	58	58	58	58	58	58	58	55	58	58	52	58	53	42	58	44	36	57	37	31	55	33	41	51	44	36	44	39	32
		27-45	Interior	62	62	62	62	62	62	62	62	62	62	62	62	62	62	62	62	62	62	62	62	62	60	60	60	59	59	59	57	57	57	55	55	52	53	53	44	52	51	39
			Exposed	62	62	62	62	62	62	62	62	62	62	62	62	62	62	62	62	62	60	62	62	58	60	59	52	59	55	43	54	49	37	48	41	33	40	36	43	36	32	39
	D	0-7	Interior	55	55	55	55	55	55	55	55	55	55	55	55	55	55	55	55	55	55	55	55	55	55	55	52	55	55	42	55	53	37	55	47	32	55	40	43	51	36	38
			Exposed	55	55	55	55	55	55	55	55	55	55	55	52	55	55	48	55	55	42	55	54	38	55	47	33	54	39	42	48	34	37	41	30	32	36	40	28	32	35	25
		7-20	Interior	55	55	55	55	55	55	55	55	55	55	55	55	55	55	55	55	55	55	55	55	54	55	55	45	54	53	38	53	45	33	52	38	43	49	34	38	41	30	34
			Exposed	55	55	55	55	55	55	55	55	52	55	55	46	55	55	41	55	52	37	55	48	34	54	39	43	48	33	37	39	43	32	34	38	28	30	34	25	41	30	22
		20-27	Interior	60	60	60	60	60	60	60	60	60	60	60	60	60	60	60	60	60	60	60	60	60	60	60	55	59	56	47	57	51	39	56	42	34	54	37	30	53	33	41
			Exposed	60	60	60	60	60	60	60	60	59	60	60	55	60	59	52	60	55	46	60	52	41	60	42	35	59	36	30	54	31	39	48	41	34	41	36	30	36	32	27
		27-45	Interior	64	64	64	64	64	64	64	64	64	64	64	64	64	64	64	63	63	63	62	62	62	60	60	60	58	58	55	56	56	50	54	53	41	52	48	36	48	41	32
			Exposed	64	64	64	64	64	64	64	64	63	64	64	60	64	63	58	63	61	55	62	59	52	58	54	42	53	47	36	44	39	31	38	34	41	34	30	36	30	41	32

* Cells with an astrisks indicates that the L-foot must be oriented in the Y- direction as indicated in the image.

10 Highlighted cell indicate 3-rail system span. Contact Unirac Engineering Services for support.

~~10~~ Highlighted cell with strikethrough indicate 3-rail system span and module clamp allowable capacity exceeds with 3-rails. 4-Rail system required. Contact Unirac Engineering Services for support.

UNIRAC

ASCE 7-22	II	30 ft	Ss = 1.25	19 sq.ft	PORTRAIT	CROSS-SLOPE	NXT	NXT COMBO	Stronghold BUTYL Rafter #14S
Design Standard	Risk Category	Roof Height	Seismic	Module Area	Orientation	Rail Direction	Rail Type	Clamp	Attachment

SPAN TABLES

Maximum Allowable Rail Spans for Rooftop Solar Panels Parallel to the Roof Surface (inches)

Ground Snow Load (psf)	Wind Exposure Category	Roof Tilt Angle (deg)	Panel Exposure	Basic Wind Speed (mph)																																						
				90			95			100			105			110			115			120			130			140			150			160			170			180		
				Roof Wind Zone																																						
				1	2	3	1	2	3	1	2	3	1	2	3	1	2	3	1	2	3	1	2	3	1	2	3	1	2	3	1	2	3	1	2	3	1	2	3	1	2	3
60	B	0-7	Interior	49	49	49	49	49	49	49	49	49	49	49	49	49	49	49	49	49	49	49	49	49	49	49	49	49	49	49	49	49	49	49	49	49	49	49	49	49	49	44
			Exposed	49	49	49	49	49	49	49	49	49	49	49	49	49	49	49	49	49	49	49	49	49	49	49	49	49	49	49	49	49	42	49	49	37	49	47	32	49	40	43
		7-20	Interior	49	49	49	49	49	49	49	49	49	49	49	49	49	49	49	49	49	49	49	49	49	49	49	49	49	49	49	49	49	49	49	49	49	49	49	44	49	49	39
			Exposed	49	49	49	49	49	49	49	49	49	49	49	49	49	49	49	49	49	49	49	49	49	49	49	49	49	49	43	49	49	37	49	44	32	49	38	43	49	34	38
		20-27	Interior	54	54	54	54	54	54	54	54	54	54	54	54	54	54	54	54	54	54	54	54	54	54	54	54	54	54	54	54	54	54	54	54	54	54	54	54	53	53	50
			Exposed	54	54	54	54	54	54	54	54	54	54	54	54	54	54	54	54	54	54	54	54	54	54	54	54	54	54	54	54	54	46	54	51	39	54	42	34	53	37	31
		27-45	Interior	64*	64*	64*	64*	64*	64*	64*	64*	64*	64*	64*	64*	64*	64*	64*	64*	64*	64*	64*	64*	64*	64*	64*	64*	64*	64*	64*	63*	63*	63*	64*	64*	63*	55	55	55	54	54	54
			Exposed	64*	64*	64*	64*	64*	64*	64*	64*	64*	64*	64*	64*	64*	64*	64*	64*	64*	64*	64*	64*	64*	64*	64*	64*	64*	64*	59	63*	58	55	57	57	50	55	53	41	54	48	37
	C	0-7	Interior	49	49	49	49	49	49	49	49	49	49	49	49	49	49	49	49	49	49	49	49	49	49	49	49	49	49	49	49	49	45	49	49	39	49	49	34	49	43	30
			Exposed	49	49	49	49	49	49	49	49	49	49	49	49	49	49	49	49	49	49	49	49	48	49	49	39	49	49	33	49	41	44	49	36	38	43	31	34	38	42	30
		7-20	Interior	49	49	49	49	49	49	49	49	49	49	49	49	49	49	49	49	49	49	49	49	49	49	49	49	49	49	47	49	49	39	49	48	34	48	41	30	47	36	40
			Exposed	49	49	49	49	49	49	49	49	49	49	49	49	49	49	49	49	49	46	49	49	41	49	49	34	49	40	30	49	35	39	41	30	34	36	40	30	32	36	27
		20-27	Interior	54	54	54	54	54	54	54	54	54	54	54	54	54	54	54	54	54	54	54	54	54	54	54	54	54	54	54	54	54	51	53	52	41	52	45	36	51	39	32
			Exposed	54	54	54	54	54	54	54	54	54	54	54	54	54	54	54	54	54	54	54	54	52	54	53	42	54	44	36	54	37	31	53	33	41	51	44	36	44	39	32
		27-45	Interior	64*	64*	64*	64*	64*	64*	64*	64*	64*	64*	64*	64*	64*	64*	64*	64*	64*	64*	64*	64*	64*	62*	62*	62*	65*	65*	56	54	54	54	53	53	52	51	51	44	50	50	39
			Exposed	64*	64*	64*	64*	64*	64*	64*	64*	64*	64*	64*	64*	64*	64*	63*	64*	64*	59	64*	63*	58	62*	57	52	56	55	43	54	49	37	48	41	33	40	36	43	36	32	39
	D	0-7	Interior	51	51	51	51	51	51	51	51	51	51	51	51	51	51	51	51	51	51	51	51	51	51	51	51	51	51	42	51	51	37	51	47	32	51	40	43	51	36	38
			Exposed	51	51	51	51	51	51	51	51	51	51	51	51	51	51	48	51	51	42	51	51	38	51	47	33	51	39	42	48	34	37	41	30	32	36	40	28	32	35	25
		7-20	Interior	52	52	52	52	52	52	52	52	52	52	52	52	52	52	52	52	52	52	52	52	52	52	52	45	51	51	38	50	45	33	49	38	43	48	34	38	41	30	34
			Exposed	52	52	52	52	52	52	52	52	52	52	52	46	52	52	41	52	52	37	52	48	34	52	39	43	48	33	37	39	43	32	34	38	28	30	34	25	41	30	22
		20-27	Interior	56	56	56	56	56	56	56	56	56	56	56	56	56	56	56	56	56	56	56	56	56	56	56	55	55	55	47	54	51	39	53	42	34	52	37	30	50	33	41
			Exposed	56	56	56	56	56	56	56	56	56	56	56	56	56	56	56	56	56	46	56	52	41	56	42	35	55	36	30	54	31	39	48	41	34	41	36	30	36	32	27
		27-45	Interior	69*	69*	69*	69*	69*	69*	69*	69*	69*	69*	69*	69*	69*	69*	69*	73*	60	60	59	59	59	57	57	57	55	55	55	54	54	50	52	52	41	50	48	36	48	41	32
			Exposed	69*	69*	69*	69*	69*	61	69*	61	61	69*	61	60	61	61	58	60	60	55	59	59	52	57	54	42	53	47	36	44	39	31	38	34	41	34	30	36	30	41	32
70	B	0-7	Interior	45	45	45	45	45	45	45	45	45	45	45	45	45	45	45	45	45	45	45	45	45	45	45	45	45	45	45	45	45	45	45	45	45	45	45	45	45	45	44
			Exposed	45	45	45	45	45	45	45	45	45	45	45	45	45	45	45	45	45	45	45	45	45	45	45	45	45	45	45	45	45	42	45	45	37	45	45	32	45	40	43
		7-20	Interior	46	46	46	46	46	46	46	46	46	46	46	46	46	46	46	46	46	46	46	46	46	46	46	46	46	46	46	46	46	46	46	46	46	46	46	44	46	46	39
			Exposed	46	46	46	46	46	46	46	46	46	46	46	46	46	46	46	46	46	46	46	46	46	46	46	46	46	46	43	46	46	37	46	44	32	46	38	43	46	34	38
		20-27	Interior	51	51	51	51	51	51	51	51	51	51	51	51	51	51	51	51	51	51	51	51	51	51	51	51	51	51	51	51	51	51	51	51	51	51	51	51	51	51	50
			Exposed	51	51	51	51	51	51	51	51	51	51	51	51	51	51	51	51	51	51	51	51	51	51	51	51	51	51	51	51	51	46	51	51	39	51	42	34	51	37	31
		27-45	Interior	56*	56*	56*	56*	56*	56*	56*	56*	56*	56*	56*	56*	56*	56*	56*	56*	56*	56*	56*	56*	56*	56*	56*	56*	56*	56*	56*	55*	55*	55*	54*	54*	54*	55*	55*	55*	54*	54*	54*
			Exposed	56*	56*	56*	56*	56*	56*	56*	56*	56*	56*	56*	56*	56*	56*	56*	56*	56*	56*	56*	56*	56*	56*	56*	56*	56*	56*	56*	55*	55*	55*	54*	54*	50	55*	54*	41	54*	48	37
	C	0-7	Interior	45	45	45	45	45	45	45	45	45	45	45	45	45	45	45	45	45	45	45	45	45	45	45	45	45	45	45	45	45	45	45	45	39	45	45	34	45	43	30
			Exposed	45	45	45	45	45	45	45	45	45	45	45	45	45	45	45	45	45	45	45	45	45	45	45	39	45	45	33	45	41	44	45	36	38	43	31	34	38	42	30
		7-20	Interior	46	46	46	46	46	46	46	46	46	46	46	46	46	46	46	46	46	46	46	46	46	46	46	46	46	46	46	46	46	39	46	46	34	45	41	30	45	36	40
			Exposed	46	46	46	46	46	46	46	46	46	46	46	46	46	46	46	46	46	46	46	46	41	46	46	34	46	40	30	46	35	39	41	30	34	36	40	30	32	36	27
		20-27	Interior	51	51	51	51	51	51	51	51	51	51	51	51	51	51	51	51	51	51	51	51	51	51	51	51	51	51	51	51	51	51	50	50	41	49	45	36	48	39	32
			Exposed	51	51	51	51	51	51	51	51	51	51	51	51	51	51	51	51	51	51	51	51	51	51	51	42	51	44	36	51	37	31	50	33	41	49	44	36	44	39	32
		27-45	Interior	56*	56*	56*	56*	56*	56*	56*	56*	56*	56*	56*	56*	56*	56*	56*	56*	56*	56*	56*	56*	56*	54*	54*	54*	55*	55*	55*	54*	54*	54*	54*	54*	50	56*	49	44	48	48	39
			Exposed	56*	56*	56*	56*	56*	56*	56*	56*	56*	56*	56*	56*	56*	56*	56*	56*	56*	56*	56*	56*	56*	54*	54*	52	55*	55*	43	54*	49	37	48	41	33	40	36	43	36	32	39
	D	0-7	Interior	48	48	48	48	48	48	48	48	48	48	48	48	48	48	48	48	48	48	48	48	48	48	48	48	48	48	42	48	48	37	48	47	32	48	40	43	48	36	38
			Exposed	48	48	48	48	48	48	48	48	48	48	48	48	48	48	48	48	48	42	48	48	38	48	47	33	48	39	42	48	34	37	41	30	32	36	40	28	32	35	25
		7-20	Interior	48	48	48	48	48	48	48	48	48	48	48	48	48	48	48	48	48	48	48	48	48	48	48	45	48	48	38	47	45	33	47	38	43	46	34	38	41	30	34
			Exposed	48	48	48	48	48	48	48	48	48	48	48	46	48	48	41	48	48	37	48	48	34	48	39	43	48	33	37	39	43	32	34	38	28	30	34	25	41	30	22
		20-27	Interior	53	53	53	53	53	53	53	53	53	53	53	53	53	53	53	53	53	53	53	53	53	53	53	53	52	52	47	51	51	39	50	42	34	49	37	30	48	33	41
			Exposed	53	53	53	53	53	53	53	53	53	53	53	53	53	53	52	53	53	46	53	52	41	53	42	35	52	36	30	51	31	39	48	41	34	41	36	30	36	32	27
		27-45	Interior	61*	61*	61*	61*	61*	61*	61*	61*	61*	61*	61*	61*	60*	60*	60*	59*	59*	59*	59*	59*	59*	59*	59*	59*	53	53	53	51	51	50	50	50	41	48	48	36	47	41	32
			Exposed	61*	61*	61*	61*	61*	61*	61*	61*	61*	61*	61*	60*	60*	60*	58	59*	59*	55	59*	59*	52	55	54	42	53	47	36	44	39	31	38	34	41	34	30	36	30	41	32
80	B	0-7	Interior	43	43	43	43	43	43	43	43	43	43	43	43	43	43	43	43	43	43	43	43	43	43	43	43	43	43	43	43	43	43	43	43	43	43	43	43	43	43	43
			Exposed	43	43	43	43	43	43	43	43	43	43	43	43	43	43	43	43	43	43	43	43	43	43	43	43	43	43	43	43	43	42	43	43	37	43	43	32	43	40	43
		7-20	Interior	43	43	43	43	43	43	43	43	43	43	43	43	43	43	43	43	43	43	43	43	43	43	43	43	43	43	43	43	43	43	43	43	43	43	43	43	43	43	39
			Exposed	43	43	43	43	43	43	43	43	43	43	43	43	43	43	43	43	43	43	43	43	43	43	43	43	43	43	43	43	43	37	43	43	32	43	38	43	43	34	38
		20-27	Interior	50*	50*	50*	50*	50*	50*	50*	50*	50*	50*	50*	50*	50*	50*	50*	50*	50*	50*	50*	50*	50*	50*	50*	50*	50*	50*	50*	50*	50*	50*	50*	50*	50*	50*	50*	50*	50*	50*	50*
			Exposed	50*	50*	50*	50*	50*	50*	50*	50*	50*	50*	50*	50*	50*	50*	50*	50*	50*	50*	50*	50*	50*	50*	50*	50*	50*	50*	50*	50*	50*	46	50*	50*	39	50*	42	34	50*	37	31
		27-45	Interior	53*	53*	53*	53*	53*	53*	53*	53*	53*	53*	53*	53*	53*	53*	53*	53*	53*	53*	53*	53*	53*	53*	53*	53*	53*	53*	53*	52*	52*	52*	51*	51*	51*	50*	50*	50*	49*	49*	49*
			Exposed	53*	53*	53*	53*	53*	53*	53*	53*	53*	53*	53*	53*	53*	53*	53*	53*	53*	53*	53*	53*	53*	53*	53*	53*	53*	53*	53*	52*	52*	52*	51*	51*	50*	50*	50*	41	49*	49*	37
	C	0-7	Interior	43	43	43	43	43	43	43	43	43	43	43	43	43	43	43	43	43	43	43	43	43	43	43	43	43	43	43	43	43	43	43	43	39	43	43	34	43	43	30
			Exposed	43	43	43	43	43	43	43	43	43	43	43	43	43	43	43	43	43	43	43	43	43	43	43	39	43	43	33	43	41	44	43	36	38	43	31	34	38	42	30
		7-20	Interior	43	43	43	43	43	43	43	43	43	43	43	43	43	43	43	43	43	43	43	43	43	43	43	43	43	43	43	43	43	39	43	43	34	43	41	30	42	36	40
			Exposed	43	43	43	43	43	43	43	43	43	43	43	43	43	43	43	43	43	43	43	43	41	43	43	34	43	40	30	43	35	39	41	30	34	36	40	30	32	36	27
		20-27	Interior	50*	50*	50*	50*	50*	50*	50*	50*	50*	50*	50*	50*	50*	50*	50*	50*	50*	50*	50*	50*	50*	50*	50*	50*	50*	50*	50*	50*	50*	50*	50*	50*	41	47	45	36	46	39	32
			Exposed	50*	50*	50*	50*	50*	50*	50*	50*	50*	50*	50*	50*	50*	50*	50*	50*	50*	50*	50*	50*	50*	50*	50*	42	50*	44	36	50*	37	31	50*	33	41	47	44	36	44	39	32
		27-45	Interior	53*	53*	53*	53*	53*	53*	53*	53*	53*	53*	53*	53*	53*	53*	53*	53*	53*	53*	53*	53*	53*	52*	52*	52*	51*	51*	51*	50*	50*	50*	48*	48*	48*	49*	49*	44	48*	48*	39
			Exposed	53*	53*	53*	53*	53*	53*	53*	53*	53*	53*	53*	53*	53*	53*	53*	53*	53*	53*	53*	53*	53*	52*	52*	52*	51*	51*	43	50*	49*	37	48*	41	33	40	36	43	36	32	39
	D	0-7	Interior	45	45	45	45	45	45	45	45	45	45	45	45	45	45	45	45	45	45	45	45	45	45	45	45	45	45	42	45	45	37	45	45	32	45	40	43	45	36	38
			Exposed	45	45	45	45	45	45	45	45	45	45	45	45	45	45	45	45	45	42	45	45	38	45	45	33	45	39	42	45	34	37	41	30	32	36	40	28	32	35	25
		7-20	Interior	45	45	45	45	45	45	45	45	45	45	45	45	45	45	45	45	45	45	45	45	45	45	45	45	45	45	38	45	45	33	44	38	43	44	34	38	41	30	34
			Exposed	45	45	45	45	45	45	45	45	45	45	45	45	45	45	41	45	45	37	45	45	34	45	39	43	45	33	37	39	43	32	34	38	28	30	34	25	41	30	22
		20-27	Interior	50	50	50	50	50	50	50	50	50	50	50	50	50	50	50	50	50	50	50	50	50	50	50	50	50	50	47	49	49	39	48	42	34	47	37	30	46	33	41
			Exposed	50	50	50	50	50	50	50	50	50	50	50	50	50	50	50	50	50	46	50	50	41	50	42	35	50	36	30	49	31	39	48	41	34	41	36	30	36	32	27
		27-45	Interior	55*	55*	55*	55*	55*	55*	55*	55*	55*	55*	55*	55*	55*	55*	55*	54*	54*	54*	54*	54*	54*	55*	55*	55*	53*	53*	53*	53*	53*	49	53*	53*	41	47	47	36	45	41	32
			Exposed	55*	55*	55*	55*	55*	55*	55*	55*	55*	55*	55*	55*	55*	55*	55*	54*	54*	54*	54*	54*	52*	55*	54*	42	53*	47	36	44	39	31	38	34	41	34	30	36	30	41	32

* Cells with an astrisks indicates that the L-foot must be oriented in the Y- direction as indicated in the image.

10 Highlighted cell indicate 3-rail system span. Contact Unirac Engineering Services for support.

~~10~~ Highlighted cell with strikethrough indicate 3-rail system span and module clamp allowable capacity exceeds with 3-rails. 4-Rail system required. Contact Unirac Engineering Services for support.

UNIRAC

ASCE 7-22	II	30 ft	Ss = 1.25	19 sq.ft	PORTRAIT	CROSS-SLOPE	NXT	NXT COMBO	Stronghold BUTYL Rafter #14S
Design Standard	Risk Category	Roof Height	Seismic	Module Area	Orientation	Rail Direction	Rail Type	Clamp	Attachment

SPAN TABLES

Maximum Allowable Rail Spans for Rooftop Solar Panels Parallel to the Roof Surface (inches)

Ground Snow Load (psf)	Wind Exposure Category	Roof Tilt Angle (deg)	Panel Exposure	Basic Wind Speed (mph)																																								
				90			95			100			105			110			115			120			130			140			150			160			170			180		
				Roof Wind Zone																																								
				1	2	3	1	2	3	1	2	3	1	2	3	1	2	3	1	2	3	1	2	3	1	2	3	1	2	3	1	2	3	1	2	3	1	2	3	1	2	3
90	B	0-7	Interior	40	40	40	40	40	40	40	40	40	40	40	40	40	40	40	40	40	40	40	40	40	40	40	40	40	40	40	40	40	40	40	40	40	40	40	40	40	40	40	40	40
			Exposed	40	40	40	40	40	40	40	40	40	40	40	40	40	40	40	40	40	40	40	40	40	40	40	40	40	40	40	40	40	40	40	40	37	40	40	32	40	40	43
		7-20	Interior	40	40	40	40	40	40	40	40	40	40	40	40	40	40	40	40	40	40	40	40	40	40	40	40	40	40	40	40	40	40	40	40	40	40	40	40	40	40	39
			Exposed	40	40	40	40	40	40	40	40	40	40	40	40	40	40	40	40	40	40	40	40	40	40	40	40	40	40	40	40	40	37	40	40	32	40	38	43	40	34	38
		20-27	Interior	48*	48*	48*	48*	48*	48*	48*	48*	48*	48*	48*	48*	48*	48*	48*	48*	48*	48*	48*	48*	48*	48*	48*	48*	48*	48*	48*	48*	48*	48*	48*	48*	48*	48*	48*	48*	48*	48*	48*
			Exposed	48*	48*	48*	48*	48*	48*	48*	48*	48*	48*	48*	48*	48*	48*	48*	48*	48*	48*	48*	48*	48*	48*	48*	48*	48*	48*	48*	48*	48*	46*	48*	48*	39	48*	42	34	48*	37	31
		27-45	Interior	51*	51*	51*	51*	51*	51*	51*	51*	51*	51*	51*	51*	51*	51*	51*	51*	51*	51*	51*	51*	51*	51*	51*	51*	51*	51*	51*	50*	50*	50*	49*	49*	49*	48*	48*	48*	48*	48*	48*
			Exposed	51*	51*	51*	51*	51*	51*	51*	51*	51*	51*	51*	51*	51*	51*	51*	51*	51*	51*	51*	51*	51*	51*	51*	51*	51*	51*	51*	50*	50*	50*	49*	49*	49*	48*	48*	41	48*	48*	37
	C	0-7	Interior	40	40	40	40	40	40	40	40	40	40	40	40	40	40	40	40	40	40	40	40	40	40	40	40	40	40	40	40	40	40	40	40	39	40	40	34	40	40	30
			Exposed	40	40	40	40	40	40	40	40	40	40	40	40	40	40	40	40	40	40	40	40	40	40	40	33	40	40	44	40	36	38	40	31	34	38	42	30			
		7-20	Interior	40	40	40	40	40	40	40	40	40	40	40	40	40	40	40	40	40	40	40	40	40	40	40	40	40	40	39	40	40	34	40	40	30	40	36	40			
			Exposed	40	40	40	40	40	40	40	40	40	40	40	40	40	40	40	40	40	40	40	40	40	40	40	34	40	40	30	40	35	39	40	30	34	36	40	30	32	36	27
		20-27	Interior	48*	48*	48*	48*	48*	48*	48*	48*	48*	48*	48*	48*	48*	48*	48*	48*	48*	48*	48*	48*	48*	48*	48*	48*	48*	48*	48*	47*	47*	41	47*	45*	36	46*	39	32			
			Exposed	48*	48*	48*	48*	48*	48*	48*	48*	48*	48*	48*	48*	48*	48*	48*	48*	48*	48*	48*	48*	48*	48*	48*	42	48*	44	36	48*	37	31	47*	33	41	47*	44	36	44	39	32
		27-45	Interior	51*	51*	51*	51*	51*	51*	51*	51*	51*	51*	51*	51*	51*	51*	51*	51*	51*	51*	51*	51*	51*	50*	50*	50*	49*	49*	49*	48*	48*	48*	47*	47*	47*	46*	46*	44*	44*	44*	39
			Exposed	51*	51*	51*	51*	51*	51*	51*	51*	51*	51*	51*	51*	51*	51*	51*	51*	51*	51*	51*	51*	51*	50*	50*	50*	49*	49*	43*	48*	48*	37	47*	41	33	40	36	43	36	32	39
	D	0-7	Interior	42	42	42	42	42	42	42	42	42	42	42	42	42	42	42	42	42	42	42	42	42	42	42	42	42	42	42	42	42	37	42	42	32	42	40	43	42	36	38
			Exposed	42	42	42	42	42	42	42	42	42	42	42	42	42	42	42	42	42	42	42	42	38	42	42	33	42	39	42	42	34	37	41	30	32	36	40	28	32	35	25
		7-20	Interior	43	43	43	43	43	43	43	43	43	43	43	43	43	43	43	43	43	43	43	43	43	43	43	43	43	43	38	43	43	33	43	38	43	42	34	38	41	30	34
			Exposed	43	43	43	43	43	43	43	43	43	43	43	43	43	43	41	43	43	37	43	43	34	43	39	43	43	33	37	39	43	32	34	38	28	30	34	25	41	30	22
		20-27	Interior	50*	50*	50*	50*	50*	50*	50*	50*	50*	50*	50*	50*	50*	50*	50*	50*	50*	50*	50*	50*	50*	50*	50*	50*	50*	50*	47	49*	49*	39	46	42	34	45	37	30	44	33	41
			Exposed	50*	50*	50*	50*	50*	50*	50*	50*	50*	50*	50*	50*	50*	50*	50*	50*	50*	46	50*	50*	41	50*	42	35	50*	36	30	49*	31	39	46	41	34	41	36	30	36	32	27
		27-45	Interior	53*	53*	53*	53*	53*	53*	53*	53*	53*	53*	53*	53*	53*	53*	53*	52*	52*	52*	52*	52*	52*	50*	50*	50*	49*	49*	49*	48*	48*	48*	48*	48*	41	47*	47*	36	47*	41	32
			Exposed	53*	53*	53*	53*	53*	53*	53*	53*	53*	53*	53*	53*	53*	53*	53*	52*	52*	52*	52*	52*	52*	50*	50*	42	49*	47*	36	44	39	31	38	34	41	34	30	36	30	41	32
100	B	0-7	Interior	38	38	38	38	38	38	38	38	38	38	38	38	38	38	38	38	38	38	38	38	38	38	38	38	38	38	38	38	38	38	38	38	38	38	38	38	38	38	38
			Exposed	38	38	38	38	38	38	38	38	38	38	38	38	38	38	38	38	38	38	38	38	38	38	38	38	38	38	38	38	38	37	38	38	32	38	38	43			
		7-20	Interior	38	38	38	38	38	38	38	38	38	38	38	38	38	38	38	38	38	38	38	38	38	38	38	38	38	38	38	38	38	38	38	38	38	38	38	38	38	38	38
			Exposed	38	38	38	38	38	38	38	38	38	38	38	38	38	38	38	38	38	38	38	38	38	38	38	38	38	38	38	38	38	37	38	38	32	38	38	43	38	34	38
		20-27	Interior	43*	43*	43*	43*	43*	43*	43*	43*	43*	43*	43*	43*	43*	43*	43*	43*	43*	43*	43*	43*	43*	43*	43*	43*	43*	43*	43*	43*	43*	43*	43*	43*	43*	43*	43*	43*	43*	43*	43*
			Exposed	43*	43*	43*	43*	43*	43*	43*	43*	43*	43*	43*	43*	43*	43*	43*	43*	43*	43*	43*	43*	43*	43*	43*	43*	43*	43*	43*	43*	43*	43*	43*	43*	39	43*	42*	34	43*	37	31
		27-45	Interior	47*	47*	47*	47*	47*	47*	47*	47*	47*	47*	47*	47*	47*	47*	47*	47*	47*	47*	47*	47*	47*	47*	47*	47*	47*	47*	47*	47*	47*	47*	47*	47*	47*	47*	47*	47*	46*	46*	46*
			Exposed	47*	47*	47*	47*	47*	47*	47*	47*	47*	47*	47*	47*	47*	47*	47*	47*	47*	47*	47*	47*	47*	47*	47*	47*	47*	47*	47*	47*	47*	47*	47*	47*	47*	47*	47*	41*	46*	46*	37
	C	0-7	Interior	38	38	38	38	38	38	38	38	38	38	38	38	38	38	38	38	38	38	38	38	38	38	38	38	38	38	38	38	38	38	38	38	38	38	38	34	38	38	30
			Exposed	38	38	38	38	38	38	38	38	38	38	38	38	38	38	38	38	38	38	38	38	38	38	38	33	38	38	44	38	36	38	38	31	34	38	42	30			
		7-20	Interior	38	38	38	38	38	38	38	38	38	38	38	38	38	38	38	38	38	38	38	38	38	38	38	38	38	38	38	38	38	38	38	38	34	38	38	30	38	36	40
			Exposed	38	38	38	38	38	38	38	38	38	38	38	38	38	38	38	38	38	38	38	38	38	38	38	34	38	38	30	38	35	39	38	30	34	36	40	30	32	36	27
		20-27	Interior	43*	43*	43*	43*	43*	43*	43*	43*	43*	43*	43*	43*	43*	43*	43*	43*	43*	43*	43*	43*	43*	43*	43*	43*	43*	43*	43*	43*	43*	43*	43*	43*	41*	43*	43*	36	44*	39	32
			Exposed	43*	43*	43*	43*	43*	43*	43*	43*	43*	43*	43*	43*	43*	43*	43*	43*	43*	43*	43*	43*	43*	43*	43*	42*	43*	43*	36	43*	37	31	43*	33	41	43*	44	36	44*	39	32
		27-45	Interior	47*	47*	47*	47*	47*	47*	47*	47*	47*	47*	47*	47*	47*	47*	47*	47*	47*	47*	47*	47*	47*	47*	47*	47*	47*	47*	47*	46*	46*	46*	45*	45*	45*	44*	44*	44*	43*	43*	39*
			Exposed	47*	47*	47*	47*	47*	47*	47*	47*	47*	47*	47*	47*	47*	47*	47*	47*	47*	47*	47*	47*	47*	47*	47*	47*	47*	47*	43*	46*	46*	37	45*	41*	33	40*	36	43	36	32	39
	D	0-7	Interior	40	40	40	40	40	40	40	40	40	40	40	40	40	40	40	40	40	40	40	40	40	40	40	40	40	40	40	40	40	37	40	40	32	40	40	43	40	36	38
			Exposed	40	40	40	40	40	40	40	40	40	40	40	40	40	40	40	40	40	40	40	40	38	40	40	33	40	39	42	40	34	37	40	30	32	36	40	28	32	35	25
		7-20	Interior	40	40	40	40	40	40	40	40	40	40	40	40	40	40	40	40	40	40	40	40	40	40	40	40	40	40	38	40	40	33	40	38	43	40	34	38	40	30	34
			Exposed	40	40	40	40	40	40	40	40	40	40	40	40	40	40	40	40	40	37	40	40	34	40	39	43	40	33	37	39	43	32	34	38	28	30	34	25	41	30	22
		20-27	Interior	48*	48*	48*	48*	48*	48*	48*	48*	48*	48*	48*	48*	48*	48*	48*	48*	48*	48*	48*	48*	48*	48*	48*	48*	48*	48*	47*	47*	47*	39	46*	42	34	46*	37	30	45*	33	41
			Exposed	48*	48*	48*	48*	48*	48*	48*	48*	48*	48*	48*	48*	48*	48*	48*	48*	48*	46*	48*	48*	41	48*	42	35	48*	36	30	47*	31	39	46*	41	34	41	36	30	36	32	27
		27-45	Interior	51*	51*	51*	51*	51*	51*	51*	51*	51*	51*	51*	51*	51*	51*	51*	50*	50*	50*	50*	50*	50*	49*	49*	49*	47*	47*	47*	46*	46*	46*	45*	45*	41	44*	44*	36	43*	41	32
			Exposed	51*	51*	51*	51*	51*	51*	51*	51*	51*	51*	51*	51*	51*	51*	51*	50*	50*	50*	50*	50*	50*	49*	49*	42	47*	47*	36	45*	39	31	38	34	41	34	30	36	30	41	32

*	Cells with an astrisks indicates that the L-foot must be oriented in the Y- direction as indicated in the image.
10	Highlighted cell indicate 3-rail system span. Contact Unirac Engineering Services for support.
~~10~~	Highlighted cell with strikethrough indicate 3-rail system span and module clamp allowable capacity exceeds with 3-rails. 4-Rail system required. Contact Unirac Engineering Services for support.

UNIRAC

ASCE 7-22	II	30 ft	Ss = 1.25	19 sq.ft	LANDSCAPE	CROSS-SLOPE	NXT	NXT COMBO	Stronghold BUTYL Rafter #14S
Design Standard	Risk Category	Roof Height	Seismic	Module Area	Orientation	Rail Direction	Rail Type	Clamp	Attachment

SPAN TABLES

Maximum Allowable Rail Spans for Rooftop Solar Panels Parallel to the Roof Surface (inches)

Ground Snow Load (psf)	Wind Exposure Category	Roof Tilt Angle (deg)	Panel Exposure	Basic Wind Speed (mph)																																										
				90			95			100			105			110			115			120			130			140			150			160			170			180		
				Roof Wind Zone																																										
				1	2	3	1	2	3	1	2	3	1	2	3	1	2	3	1	2	3	1	2	3	1	2	3	1	2	3	1	2	3	1	2	3	1	2	3	1	2	3
0	B	0-7	Interior	102	102	102	102	102	102	102	102	102	102	102	97	102	102	93	102	102	89	102	98	85	102	91	79	98	85	74	92	80	69	86	75	65	82	71	62	78	68	60
			Exposed	102	102	92	102	101	88	102	96	83	102	92	80	102	88	76	98	84	73	94	81	70	87	76	65	81	71	62	76	67	59	72	63	56	68	61	52	65	59	60
		7-20	Interior	102	102	102	102	102	102	102	102	99	102	102	94	102	102	89	102	99	85	102	95	82	102	87	75	95	81	70	88	75	65	82	71	63	77	67	60	73	64	57
			Exposed	102	102	89	102	98	84	102	93	80	102	88	76	99	84	73	94	80	70	90	77	67	83	71	63	77	66	60	71	63	56	67	60	52	64	57	60	61	54	57
		20-27	Interior	103	103	103	103	103	103	103	103	103	103	103	103	103	103	99	103	103	94	103	100	90	103	91	83	103	84	77	99	78	71	93	73	67	87	69	64	83	65	61
			Exposed	103	103	99	103	103	93	103	97	88	103	92	84	103	87	80	103	83	76	101	80	73	93	74	67	87	69	63	81	64	60	76	62	58	72	59	54	69	56	51
		27-45	Interior	103	103	103	103	103	103	103	103	103	103	103	103	103	103	103	103	103	102	103	103	97	103	99	89	100	92	83	93	86	77	87	80	73	81	76	69	77	72	65
			Exposed	103	103	103	103	103	100	103	103	95	103	100	90	103	95	86	100	91	82	95	87	79	87	81	73	81	75	68	75	71	64	70	67	61	66	64	59	63	61	56
	C	0-7	Interior	102	102	95	102	102	90	102	99	85	102	94	82	102	90	78	100	86	75	96	83	72	89	77	67	83	72	63	78	68	60	74	65	57	70	62	54	66	60	51
			Exposed	102	90	78	99	86	74	94	82	71	90	78	68	86	75	65	83	72	63	79	69	61	74	65	58	69	62	53	65	59	49	62	55	57	60	52	54	57	59	51
		7-20	Interior	102	102	92	102	101	87	102	95	82	102	90	78	102	86	75	97	82	71	93	79	68	85	73	64	79	68	61	73	64	58	69	61	54	65	59	51	63	55	59
			Exposed	102	86	74	96	81	71	90	77	67	86	74	64	82	70	62	78	67	60	75	65	59	69	61	54	65	58	50	62	54	57	59	51	54	56	58	50	52	55	45
		20-27	Interior	103	103	102	103	103	96	103	100	91	103	95	86	103	90	82	103	86	78	103	82	75	96	76	69	89	70	65	83	66	62	78	63	59	74	60	56	70	58	52
			Exposed	103	90	82	103	85	77	102	80	73	97	76	70	92	73	67	89	70	64	85	67	62	79	63	59	73	60	55	69	56	51	65	53	59	62	49	55	60	57	52
		27-45	Interior	103	103	103	103	103	103	103	103	98	103	102	93	103	98	88	103	93	85	98	90	81	90	83	75	83	77	70	77	73	66	72	68	63	68	65	60	65	62	57
			Exposed	103	97	88	101	92	84	96	88	79	91	84	76	86	80	73	82	77	70	79	74	67	73	69	63	68	64	60	64	61	56	61	59	53	59	55	60	55	52	57
	D	0-7	Interior	102	101	87	102	95	83	102	91	79	100	87	75	96	83	72	92	80	69	88	77	67	82	72	63	77	67	60	72	64	56	68	61	52	65	58	60	62	55	57
			Exposed	96	83	72	91	79	68	87	75	65	83	72	63	79	69	61	76	67	59	73	65	57	68	61	53	64	58	59	61	54	56	59	50	52	55	58	48	52	55	42
		7-20	Interior	102	97	84	102	92	79	102	87	75	97	83	72	92	79	68	88	75	66	84	72	64	78	67	60	72	63	57	67	60	53	64	57	60	61	54	57	59	51	54
			Exposed	92	79	68	87	74	65	82	71	63	78	68	61	75	65	59	72	63	56	69	61	54	64	57	60	61	53	56	58	60	52	54	57	48	51	53	42	59	50	37
		20-27	Interior	103	102	92	103	96	87	103	91	83	103	86	78	103	82	75	99	78	72	95	75	69	88	69	64	82	65	61	77	62	58	72	59	54	68	56	51	65	53	59
			Exposed	103	82	75	98	77	71	93	74	67	89	70	65	85	67	62	81	65	61	78	63	59	73	59	54	68	55	50	64	52	58	61	59	54	59	56	51	56	52	45
		27-45	Interior	103	103	100	103	103	94	103	98	89	103	94	85	98	90	81	93	86	78	89	82	74	82	76	69	76	71	65	71	67	62	66	64	59	63	61	56	61	59	52
			Exposed	98	89	81	92	85	77	87	81	73	83	77	70	79	74	67	75	71	64	72	68	63	67	64	59	63	61	55	60	58	51	57	54	59	54	51	56	50	59	52
10	B	0-7	Interior	95	95	95	95	95	95	95	95	95	95	95	95	95	95	93	95	95	89	95	95	85	95	91	79	95	85	74	92	80	69	86	75	65	82	71	62	78	68	60
			Exposed	95	95	92	95	95	88	95	95	83	95	92	80	95	88	76	95	84	73	94	81	70	87	76	65	81	71	62	76	67	59	72	63	56	68	61	52	65	59	60
		7-20	Interior	96	96	96	96	96	96	96	96	96	96	96	94	96	96	89	96	96	85	96	95	82	96	87	75	95	81	70	88	75	65	82	71	63	77	67	60	73	64	57
			Exposed	96	96	89	96	96	84	96	93	80	96	88	76	96	84	73	94	80	70	90	77	67	83	71	63	77	66	60	71	63	56	67	60	52	64	57	60	61	54	57
		20-27	Interior	100	100	100	100	100	100	100	100	100	100	100	100	100	100	99	100	100	94	100	100	90	100	91	83	100	84	77	99	78	71	93	73	67	87	69	64	83	65	61
			Exposed	100	100	99	100	100	93	100	97	88	100	92	84	100	87	80	100	83	76	100	80	73	93	74	67	87	69	63	81	64	60	76	62	58	72	59	54	69	56	51
		27-45	Interior	102	102	102	102	102	102	102	102	102	102	102	102	102	102	102	102	102	102	102	102	97	102	99	89	100	92	83	93	86	77	87	80	73	81	76	69	77	72	65
			Exposed	102	102	102	102	102	100	102	102	95	102	100	90	102	95	86	100	91	82	95	87	79	87	81	73	81	75	68	75	71	64	70	67	61	66	64	59	63	61	56
	C	0-7	Interior	95	95	95	95	95	90	95	95	85	95	94	82	95	90	78	95	86	75	95	83	72	89	77	67	83	72	63	78	68	60	74	65	57	70	62	54	66	60	51
			Exposed	95	90	78	95	86	74	94	82	71	90	78	68	86	75	65	83	72	63	79	69	61	74	65	58	69	62	53	65	59	49	62	55	57	60	52	54	57	59	51
		7-20	Interior	96	96	92	96	96	87	96	95	82	96	90	78	96	86	75	96	82	71	93	79	68	85	73	64	79	68	61	73	64	58	69	61	54	65	59	51	63	55	59
			Exposed	96	86	74	96	81	71	90	77	67	86	74	64	82	70	62	78	67	60	75	65	59	69	61	54	65	58	50	62	54	57	59	51	54	56	58	50	52	55	45
		20-27	Interior	100	100	100	100	100	96	100	100	91	100	95	86	100	90	82	100	86	78	100	82	75	96	76	69	89	70	65	83	66	62	78	63	59	74	60	56	70	58	52
			Exposed	100	90	82	100	85	77	100	80	73	97	76	70	92	73	67	89	70	64	85	67	62	79	63	59	73	60	55	69	56	51	65	53	59	62	49	55	60	57	52
		27-45	Interior	102	102	102	102	102	102	102	102	98	102	102	93	102	98	88	102	93	85	98	90	81	90	83	75	83	77	70	77	73	66	72	68	63	68	65	60	65	62	57
			Exposed	102	97	88	101	92	84	96	88	79	91	84	76	86	80	73	82	77	70	79	74	67	73	69	63	68	64	60	64	61	56	61	59	53	59	55	60	55	52	57
	D	0-7	Interior	95	95	87	95	95	83	95	91	79	95	87	75	95	83	72	92	80	69	88	77	67	82	72	63	77	67	60	72	64	56	68	61	52	65	58	60	62	55	57
			Exposed	95	83	72	91	79	68	87	75	65	83	72	63	79	69	61	76	67	59	73	65	57	68	61	53	64	58	59	61	54	56	59	50	52	55	58	48	52	55	42
		7-20	Interior	96	96	84	96	92	79	96	87	75	96	83	72	92	79	68	88	75	66	84	72	64	78	67	60	72	63	57	67	60	53	64	57	60	61	54	57	59	51	54
			Exposed	92	79	68	87	74	65	82	71	63	78	68	61	75	65	59	72	63	56	69	61	54	64	57	60	61	53	56	58	60	52	54	57	48	51	53	42	59	50	37
		20-27	Interior	101	101	92	101	96	87	101	91	83	101	86	78	101	82	75	99	78	72	95	75	69	88	69	64	82	65	61	77	62	58	72	59	54	68	56	51	65	53	59
			Exposed	101	82	75	98	77	71	93	74	67	89	70	65	85	67	62	81	65	61	78	63	59	73	59	54	68	55	50	64	52	58	61	59	54	59	56	51	56	52	45
		27-45	Interior	103	103	100	103	103	94	103	98	89	103	94	85	98	90	81	93	86	78	89	82	74	82	76	69	76	71	65	71	67	62	66	64	59	63	61	56	61	59	52
			Exposed	98	89	81	92	85	77	87	81	73	83	77	70	79	74	67	75	71	64	72	68	63	67	64	59	63	61	55	60	58	51	57	54	59	54	51	56	50	59	52
20	B	0-7	Interior	86	86	86	86	86	86	86	86	86	86	86	86	86	86	86	86	86	86	86	86	85	86	86	79	86	85	74	86	80	69	86	75	65	82	71	62	78	68	60
			Exposed	86	86	86	86	86	86	86	86	83	86	86	80	86	86	76	86	84	73	86	81	70	86	76	65	81	71	62	76	67	59	72	63	56	68	61	52	65	59	60
		7-20	Interior	86	86	86	86	86	86	86	86	86	86	86	86	86	86	86	86	86	85	86	86	82	86	86	75	86	81	70	86	75	65	82	71	63	77	67	60	73	64	57
			Exposed	86	86	86	86	86	84	86	86	80	86	86	76	86	84	73	86	80	70	86	77	67	83	71	63	77	66	60	71	63	56	67	60	52	64	57	60	61	54	57
		20-27	Interior	92	92	92	92	92	92	92	92	92	92	92	92	92	92	92	92	92	92	92	92	90	92	91	83	92	84	77	92	78	71	92	73	67	87	69	64	83	65	61
			Exposed	92	92	92	92	92	92	92	92	88	92	92	84	92	87	80	92	83	76	92	80	73	92	74	67	87	69	63	81	64	60	76	62	58	72	59	54	69	56	51
		27-45	Interior	96	96	96	96	96	96	96	96	96	96	96	96	96	96	96	96	96	96	96	96	96	96	96	89	96	92	83	93	86	77	87	80	73	81	76	69	77	72	65
			Exposed	96	96	96	96	96	96	96	96	95	96	96	90	96	95	86	96	91	82	95	87	79	87	81	73	81	75	68	75	71	64	70	67	61	66	64	59	63	61	56
	C	0-7	Interior	86	86	86	86	86	86	86	86	85	86	86	82	86	86	78	86	86	75	86	83	72	86	77	67	83	72	63	78	68	60	74	65	57	70	62	54	66	60	51
			Exposed	86	86	78	86	86	74	86	82	71	86	78	68	86	75	65	83	72	63	79	69	61	74	65	58	69	62	53	65	59	49	62	55	57	60	52	54	57	59	51
		7-20	Interior	86	86	86	86	86	86	86	86	82	86	86	78	86	86	75	86	82	71	86	79	68	85	73	64	79	68	61	73	64	58	69	61	54	65	59	51	63	55	59
			Exposed	86	86	74	86	81	71	86	77	67	86	74	64	82	70	62	78	67	60	75	65	59	69	61	54	65	58	50	62	54	57	59	51	54	56	58	50	52	55	45
		20-27	Interior	92	92	92	92	92	92	92	92	91	92	92	86	92	90	82	92	86	78	92	82	75	92	76	69	89	70	65	83	66	62	78	63	59	74	60	56	70	58	52
			Exposed	92	90	82	92	85	77	92	80	73	92	76	70	92	73	67	89	70	64	85	67	62	79	63	59	73	60	55	69	56	51	65	53	59	62	49	55	60	57	52
		27-45	Interior	96	96	96	96	96	96	96	96	96	96	96	96	96	96	96	96	96	96	96	96	81	90	83	75	83	77	70	77	73	66	72	68	63	68	65	60	65	62	57
			Exposed	96	96	88	96	92	84	96	88	79	91	84	76	86	80	73	82	77	70	79	74	67	73	69	63	68	64	60	64	61	56	61	59	53	59	55	60	55	52	57
	D	0-7	Interior	86	86	86	86	86	83	86	86	79	86	86	75	86	83	72	86	80	69	86	77	67	82	72	63	77	67	60	72	64	56	68	61	52	65	58	60	62	55	57
			Exposed	86	83	72	86	79	68	86	75	65	83	72	63	79	69	61	76	67	59	73	65	57	68	61	53	64	58	59	61	54	56	59	50	52	55	58	48	52	55	42
		7-20	Interior	86	86	84	86	86	79	86	86	75	86	83	72	86	79	68	86	75	66	84	72	64	78	67	60	72	63	57	67	60	53	64	57	60	61	54	57	59	51	54
			Exposed	86	79	68	86	74	65	82	71	63	78	68	61	75	65	59	72	63	56	69	61	54	64	57	60	61	53	56	58	60	52	54	57	48	51	53	42	59	50	37
		20-27	Interior	94	94	92	94	94	87	94	91	83	94	86	78	94	82	75	94	78	72	94	75	69	88	69	64	82	65	61	77	62	58	72	59	54	68	56	51	65	53	59
			Exposed	94	82	75	94	77	71	93	74	67	89	70	65	85	67	62	81	65	61	78	63	59	73	59	54	68	55	50	64	52	58	61	59	54	59	56	51	56	52	45
		27-45	Interior	97	97	97	97	97	94	97	97	89	97	94	85	97	90	81	93	86	78	89	82	74	82	76	69	76	71	65	71	67	62	66	64	59	63	61	56	61	59	52
			Exposed	97	89	81	92	85	77	87	81	73	83	77	70	79	74	67	75	71	64	72	68	63	67	64	59	63	61	55	60	58	51	57	54	59	54	51	56	50	59	52

* Cells with an astrisks indicates that the L-foot must be oriented in the Y- direction as indicated in the image.

10 Highlighted cell indicate 3-rail system span. Contact Unirac Engineering Services for support.

~~10~~ Highlighted cell with strikethrough indicate 3-rail system span and module clamp allowable capacity exceeds with 3-rails. 4-Rail system required. Contact Unirac Engineering Services for support.

UNIRAC

ASCE 7-22	II	30 ft	Ss = 1.25	19 sq.ft	LANDSCAPE	CROSS-SLOPE	NXT	NXT COMBO	Stronghold BUTYL Rafter #14S
Design Standard	Risk Category	Roof Height	Seismic	Module Area	Orientation	Rail Direction	Rail Type	Clamp	Attachment

SPAN TABLES

Maximum Allowable Rail Spans for Rooftop Solar Panels Parallel to the Roof Surface (inches)

Ground Snow Load (psf)	Wind Exposure Category	Roof Tilt Angle (deg)	Panel Exposure	Basic Wind Speed (mph)																																						
				90			95			100			105			110			115			120			130			140			150			160			170			180		
				Roof Wind Zone																																						
				1	2	3	1	2	3	1	2	3	1	2	3	1	2	3	1	2	3	1	2	3	1	2	3	1	2	3	1	2	3	1	2	3	1	2	3	1	2	3
30	B	0-7	Interior	77	77	77	77	77	77	77	77	77	77	77	77	77	77	77	77	77	77	77	77	77	77	77	77	77	77	74	77	77	69	77	75	65	77	71	62	77	68	60
			Exposed	77	77	77	77	77	77	77	77	77	77	77	77	77	77	76	77	77	73	77	77	70	77	76	65	77	71	62	76	67	59	72	63	56	68	61	52	65	59	60
		7-20	Interior	77	77	77	77	77	77	77	77	77	77	77	77	77	77	77	77	77	77	77	77	77	77	77	75	77	77	70	77	75	65	77	71	63	77	67	60	73	64	57
			Exposed	77	77	77	77	77	77	77	77	77	77	77	76	77	77	73	77	77	70	77	77	67	77	71	63	77	66	60	71	63	56	67	60	52	64	57	60	61	54	57
		20-27	Interior	87	87	87	87	87	87	87	87	87	87	87	87	87	87	87	87	87	87	87	87	87	87	87	83	87	84	77	87	78	71	87	73	67	87	69	64	83	65	61
			Exposed	87	87	87	87	87	87	87	87	87	87	87	84	87	87	80	87	83	76	87	80	73	87	74	67	87	69	63	81	64	60	76	62	58	72	59	54	69	56	51
		27-45	Interior	90	90	90	90	90	90	90	90	90	90	90	90	90	90	90	90	90	90	90	90	90	90	90	89	90	90	83	90	86	77	87	80	73	81	76	69	77	72	65
			Exposed	90	90	90	90	90	90	90	90	90	90	90	90	90	90	86	90	90	82	90	87	79	87	81	73	81	75	68	75	71	64	70	67	61	66	64	59	63	61	56
	C	0-7	Interior	77	77	77	77	77	77	77	77	77	77	77	77	77	77	77	77	77	75	77	77	72	77	77	67	77	72	63	77	68	60	74	65	57	70	62	54	66	60	51
			Exposed	77	77	77	77	77	74	77	77	71	77	77	68	77	75	65	77	72	63	77	69	61	74	65	58	69	62	53	65	59	49	62	55	57	60	52	54	57	59	51
		7-20	Interior	77	77	77	77	77	77	77	77	77	77	77	77	77	77	75	77	77	71	77	77	68	77	73	64	77	68	61	73	64	58	69	61	54	65	59	51	63	55	59
			Exposed	77	77	74	77	77	71	77	77	67	77	74	64	77	70	62	77	67	60	75	65	59	69	61	54	65	58	50	62	54	57	59	51	54	56	58	50	52	55	45
		20-27	Interior	87	87	87	87	87	87	87	87	87	87	87	86	87	87	82	87	86	78	87	82	75	87	76	69	87	70	65	83	66	62	78	63	59	74	60	56	70	58	52
			Exposed	87	87	82	87	85	77	87	80	73	87	76	70	87	73	67	87	70	64	85	67	62	79	63	59	73	60	55	69	56	51	65	53	59	62	49	55	60	57	52
		27-45	Interior	90	90	90	90	90	90	90	90	90	90	90	90	90	90	88	90	90	85	90	90	81	89	83	75	83	77	70	77	73	66	72	68	63	68	65	60	65	62	57
			Exposed	90	90	88	90	90	84	90	88	79	90	84	76	86	80	73	82	77	70	79	74	67	73	69	63	68	64	60	64	61	56	61	59	53	59	55	60	55	52	57
	D	0-7	Interior	77	77	77	77	77	77	77	77	77	77	75	77	77	72	77	77	69	77	77	67	77	72	63	77	67	60	72	64	56	68	61	52	65	58	60	62	55	57
			Exposed	77	77	72	77	77	68	77	75	65	77	72	63	77	69	61	76	67	59	73	65	57	68	61	53	64	58	59	61	54	56	59	50	52	55	58	48	52	55	42
		7-20	Interior	77	77	77	77	77	77	77	77	75	77	77	72	77	77	68	77	75	66	77	72	64	77	67	60	72	63	57	67	60	53	64	57	60	61	54	57	59	51	54
			Exposed	77	77	68	77	74	65	77	71	63	77	68	61	75	65	59	72	63	56	69	61	54	64	57	60	61	53	56	58	60	52	54	57	48	51	53	42	59	50	37
		20-27	Interior	88	88	88	88	88	87	88	88	83	88	86	78	88	82	75	88	78	72	88	75	69	88	69	64	82	65	61	77	62	58	72	59	54	68	56	51	65	53	59
			Exposed	88	82	75	88	77	71	88	74	67	88	70	65	85	67	62	81	65	61	78	63	59	73	59	54	68	55	50	64	52	58	61	59	54	59	56	51	56	52	45
		27-45	Interior	92	92	92	92	92	92	92	92	89	92	92	85	92	90	81	92	86	78	89	82	74	82	76	69	76	71	65	71	67	62	66	64	59	63	61	56	61	59	52
			Exposed	92	89	81	92	85	77	87	81	73	83	77	70	79	74	67	75	71	64	72	68	63	67	64	59	63	61	55	60	58	51	57	54	59	54	51	56	50	59	52
40	B	0-7	Interior	74	74	74	74	74	74	74	74	74	74	74	74	74	74	74	74	74	74	74	74	74	74	74	74	74	74	74	74	74	69	74	74	65	74	71	62	74	68	60
			Exposed	74	74	74	74	74	74	74	74	74	74	74	74	74	74	74	74	74	73	74	74	70	74	74	65	74	71	62	74	67	59	72	63	56	68	61	52	65	59	60
		7-20	Interior	74	74	74	74	74	74	74	74	74	74	74	74	74	74	74	74	74	74	74	74	74	74	74	74	74	74	70	74	74	65	74	71	63	74	67	60	73	64	57
			Exposed	74	74	74	74	74	74	74	74	74	74	74	74	74	74	73	74	74	70	74	74	67	74	71	63	74	66	60	71	63	56	67	60	52	64	57	60	61	54	57
		20-27	Interior	80	80	80	80	80	80	80	80	80	80	80	80	80	80	80	80	80	80	80	80	80	80	80	80	80	80	77	80	78	71	80	73	67	80	69	64	79	65	61
			Exposed	80	80	80	80	80	80	80	80	80	80	80	80	80	80	80	80	80	76	80	80	73	80	74	67	80	69	63	80	64	60	76	62	58	72	59	54	69	56	51
		27-45	Interior	86	86	86	86	86	86	86	86	86	86	86	86	86	86	86	86	86	86	86	86	86	86	86	86	86	86	83	85	85	77	83	80	73	80	76	69	77	72	65
			Exposed	86	86	86	86	86	86	86	86	86	86	86	86	86	86	86	86	86	82	86	86	79	86	81	73	81	75	68	75	71	64	70	67	61	66	64	59	63	61	56
	C	0-7	Interior	74	74	74	74	74	74	74	74	74	74	74	74	74	74	74	74	74	74	74	74	72	74	74	67	74	72	63	74	68	60	74	65	57	70	62	54	66	60	51
			Exposed	74	74	74	74	74	74	74	74	71	74	74	68	74	74	65	74	72	63	74	69	61	74	65	58	69	62	53	65	59	49	62	55	57	60	52	54	57	59	51
		7-20	Interior	74	74	74	74	74	74	74	74	74	74	74	74	74	74	74	74	74	71	74	74	68	74	73	64	74	68	61	73	64	58	69	61	54	65	59	51	63	55	59
			Exposed	74	74	74	74	74	71	74	74	67	74	74	64	74	70	62	74	67	60	74	65	59	69	61	54	65	58	50	62	54	57	59	51	54	56	58	50	52	55	45
		20-27	Interior	80	80	80	80	80	80	80	80	80	80	80	80	80	80	80	80	80	78	80	80	75	80	76	69	80	70	65	79	66	62	77	63	59	74	60	56	70	58	52
			Exposed	80	80	80	80	80	77	80	80	73	80	76	70	80	73	67	80	70	64	80	67	62	79	63	59	73	60	55	69	56	51	65	53	59	62	49	55	60	57	52
		27-45	Interior	86	86	86	86	86	86	86	86	86	86	86	86	86	86	86	86	86	85	86	86	81	84	83	75	81	77	70	77	73	66	72	68	63	68	65	60	65	62	57
			Exposed	86	86	86	86	86	84	86	86	79	86	84	76	86	80	73	82	77	70	79	74	67	73	69	63	68	64	60	64	61	56	61	59	53	59	55	60	55	52	57
	D	0-7	Interior	77	77	77	77	77	77	77	77	77	77	75	77	77	72	77	77	69	77	77	67	77	72	63	77	67	60	72	64	56	68	61	52	65	58	60	62	55	57
			Exposed	77	77	72	77	77	68	77	75	65	77	72	63	77	69	61	76	67	59	73	65	57	68	61	53	64	58	59	61	54	56	59	50	52	55	58	48	52	55	42
		7-20	Interior	77	77	77	77	77	77	77	77	75	77	77	72	77	77	68	77	75	66	77	72	64	77	67	60	72	63	57	67	60	53	64	57	60	61	54	57	59	51	54
			Exposed	77	77	68	77	74	65	77	71	63	77	68	61	75	65	59	72	63	56	69	61	54	64	57	60	61	53	56	58	60	52	54	57	48	51	53	42	59	50	37
		20-27	Interior	82	82	82	82	82	82	82	82	82	82	82	78	82	82	75	82	78	72	82	75	69	82	69	64	81	65	61	77	62	58	72	59	54	68	56	51	65	53	59
			Exposed	82	82	75	82	77	71	82	74	67	82	70	65	82	67	62	81	65	61	78	63	59	73	59	54	68	55	50	64	52	58	61	59	54	59	56	51	56	52	45
		27-45	Interior	88	88	88	88	88	88	88	88	88	88	88	85	88	88	81	87	86	78	86	82	74	82	76	69	76	71	65	71	67	62	66	64	59	63	61	56	61	59	52
			Exposed	88	88	81	88	85	77	87	81	73	83	77	70	79	74	67	75	71	64	72	68	63	67	64	59	63	61	55	60	58	51	57	54	59	54	51	56	50	59	52
50	B	0-7	Interior	69	69	69	69	69	69	69	69	69	69	69	69	69	69	69	69	69	69	69	69	69	69	69	69	69	69	69	69	69	69	69	69	65	69	69	62	69	68	60
			Exposed	69	69	69	69	69	69	69	69	69	69	69	69	69	69	69	69	69	69	69	69	69	69	69	65	69	69	62	69	67	59	69	63	56	68	61	52	65	59	60
		7-20	Interior	69	69	69	69	69	69	69	69	69	69	69	69	69	69	69	69	69	69	69	69	69	69	69	69	69	69	69	69	69	65	69	69	63	69	67	60	68	64	57
			Exposed	69	69	69	69	69	69	69	69	69	69	69	69	69	69	69	69	69	69	69	69	67	69	69	63	69	66	60	69	63	56	67	60	52	64	57	60	61	54	57
		20-27	Interior	75	75	75	75	75	75	75	75	75	75	75	75	75	75	75	75	75	75	75	75	75	75	75	75	75	75	75	75	75	71	75	73	67	75	69	64	73	65	61
			Exposed	75	75	75	75	75	75	75	75	75	75	75	75	75	75	75	75	75	75	75	75	73	75	74	67	75	69	63	75	64	60	75	62	58	72	59	54	69	56	51
		27-45	Interior	81	81	81	81	81	81	81	81	81	81	81	81	81	81	81	81	81	81	81	81	81	81	81	81	81	81	81	79	79	77	77	77	73	75	75	69	73	72	65
			Exposed	81	81	81	81	81	81	81	81	81	81	81	81	81	81	81	81	81	81	81	81	79	81	81	73	81	75	68	75	71	64	70	67	61	66	64	59	63	61	56
	C	0-7	Interior	69	69	69	69	69	69	69	69	69	69	69	69	69	69	69	69	69	69	69	69	69	69	69	67	69	69	63	69	68	60	69	65	57	69	62	54	66	60	51
			Exposed	69	69	69	69	69	69	69	69	69	69	69	68	69	69	65	69	69	63	69	69	61	69	65	58	69	62	53	65	59	49	62	55	57	60	52	54	57	59	51
		7-20	Interior	69	69	69	69	69	69	69	69	69	69	69	69	69	69	69	69	69	69	69	69	68	69	69	64	69	68	61	68	64	58	67	61	54	65	59	51	63	55	59
			Exposed	69	69	69	69	69	69	69	69	67	69	69	64	69	69	62	69	67	60	69	65	59	69	61	54	65	58	50	62	54	57	59	51	54	56	58	50	52	55	45
		20-27	Interior	75	75	75	75	75	75	75	75	75	75	75	75	75	75	75	75	75	75	75	75	75	75	75	69	75	70	65	73	66	62	72	63	59	70	60	56	69	58	52
			Exposed	75	75	75	75	75	75	75	75	73	75	75	70	75	73	67	75	70	64	75	67	62	75	63	59	73	60	55	69	56	51	65	53	59	62	49	55	60	57	52
		27-45	Interior	81	81	81	81	81	81	81	81	81	81	81	81	81	81	81	81	81	81	81	81	81	78	78	75	76	76	70	73	73	66	71	68	63	68	65	60	65	62	57
			Exposed	81	81	81	81	81	81	81	81	79	81	81	76	81	80	73	81	77	70	79	74	67	73	69	63	68	64	60	64	61	56	61	59	53	59	55	60	55	52	57
	D	0-7	Interior	71	71	71	71	71	71	71	71	71	71	71	71	71	71	71	71	71	69	71	71	67	71	71	63	71	67	60	71	64	56	68	61	52	65	58	60	62	55	57
			Exposed	71	71	71	71	71	68	71	71	65	71	71	63	71	69	61	71	67	59	71	65	57	68	61	53	64	58	59	61	54	56	59	50	52	55	58	48	52	55	42
		7-20	Interior	72	72	72	72	72	72	72	72	72	72	72	72	72	72	68	72	72	66	72	72	64	72	67	60	70	63	57	67	60	53	64	57	60	61	54	57	59	51	54
			Exposed	72	72	68	72	72	65	72	71	63	72	68	61	72	65	59	72	63	56	69	61	54	64	57	60	61	53	56	58	60	52	54	57	48	51	53	42	59	50	37
		20-27	Interior	77	77	77	77	77	77	77	77	77	77	77	77	77	77	75	77	77	72	77	75	69	77	69	64	76	65	61	74	62	58	72	59	54	68	56	51	65	53	59
			Exposed	77	77	75	77	77	71	77	74	67	77	70	65	77	67	62	77	65	61	77	63	59	73	59	54	68	55	50	64	52	58	61	59	54	59	56	51	56	52	45
		27-45	Interior	83	83	83	83	83	83	83	83	83	83	83	83	83	83	81	82	82	78	81	81	74	78	76	69	75	71	65	71	67	62	66	64	59	63	61	56	61	59	52
			Exposed	83	83	81	83	83	77	83	81	73	83	77	70	79	74	67	75	71	64	72	68	63	67	64	59	63	61	55	60	58	51	57	54	59	54	51	56	50	59	52

* Cells with an astrisks indicates that the L-foot must be oriented in the Y- direction as indicated in the image.

10 Highlighted cell indicate 3-rail system span. Contact Unirac Engineering Services for support.

~~10~~ Highlighted cell with strikethrough indicate 3-rail system span and module clamp allowable capacity exceeds with 3-rails. 4-Rail system required. Contact Unirac Engineering Services for support.

UNIRAC

ASCE 7-22	II	30 ft	Ss = 1.25	19 sq.ft	LANDSCAPE	CROSS-SLOPE	NXT	NXT COMBO	Stronghold BUTYL Rafter #14S
Design Standard	Risk Category	Roof Height	Seismic	Module Area	Orientation	Rail Direction	Rail Type	Clamp	Attachment

SPAN TABLES

Maximum Allowable Rail Spans for Rooftop Solar Panels Parallel to the Roof Surface (inches)

Ground Snow Load (psf)	Wind Exposure Category	Roof Tilt Angle (deg)	Panel Exposure	Basic Wind Speed (mph)																																								
				90			95			100			105			110			115			120			130			140			150			160			170			180		
				Roof Wind Zone																																								
				1	2	3	1	2	3	1	2	3	1	2	3	1	2	3	1	2	3	1	2	3	1	2	3	1	2	3	1	2	3	1	2	3	1	2	3	1	2	3
60	B	0-7	Interior	63	63	63	63	63	63	63	63	63	63	63	63	63	63	63	63	63	63	63	63	63	63	63	63	63	63	63	63	63	63	63	63	63	63	63	62	63	63	60
			Exposed	63	63	63	63	63	63	63	63	63	63	63	63	63	63	63	63	63	63	63	63	63	63	63	63	63	63	62	63	63	59	63	63	56	63	61	52	63	59	60
		7-20	Interior	63	63	63	63	63	63	63	63	63	63	63	63	63	63	63	63	63	63	63	63	63	63	63	63	63	63	63	63	63	63	63	63	63	63	63	60	63	63	57
			Exposed	63	63	63	63	63	63	63	63	63	63	63	63	63	63	63	63	63	63	63	63	63	63	63	63	63	63	60	63	63	56	63	60	52	63	57	60	61	54	57
		20-27	Interior	70	70	70	70	70	70	70	70	70	70	70	70	70	70	70	70	70	70	70	70	70	70	70	70	70	70	70	70	70	70	70	70	67	70	69	64	69	65	61
			Exposed	70	70	70	70	70	70	70	70	70	70	70	70	70	70	70	70	70	70	70	70	70	70	70	67	70	69	63	70	64	60	70	62	58	70	59	54	69	56	51
		27-45	Interior	76	76	76	76	76	76	76	76	76	76	76	76	76	76	76	76	76	76	76	76	76	76	76	76	76	76	76	75	75	75	73	73	73	71	71	69	69	69	65
			Exposed	76	76	76	76	76	76	76	76	76	76	76	76	76	76	76	76	76	76	76	76	76	76	76	73	76	75	68	75	71	64	70	67	61	66	64	59	63	61	56
	C	0-7	Interior	63	63	63	63	63	63	63	63	63	63	63	63	63	63	63	63	63	63	63	63	63	63	63	63	63	63	63	63	63	60	63	63	57	63	62	54	63	60	51
			Exposed	63	63	63	63	63	63	63	63	63	63	63	63	63	63	63	63	63	63	63	63	61	63	63	58	63	63	53	63	59	49	62	55	57	60	52	54	57	59	51
		7-20	Interior	63	63	63	63	63	63	63	63	63	63	63	63	63	63	63	63	63	63	63	63	63	63	63	63	63	63	61	63	63	58	63	61	54	62	59	51	60	55	59
			Exposed	63	63	63	63	63	63	63	63	63	63	63	63	63	63	62	63	63	60	63	63	59	63	61	54	63	58	50	62	54	57	59	51	54	56	58	50	52	55	45
		20-27	Interior	70	70	70	70	70	70	70	70	70	70	70	70	70	70	70	70	70	70	70	70	70	70	70	69	70	70	65	69	66	62	67	63	59	66	60	56	65	58	52
			Exposed	70	70	70	70	70	70	70	70	70	70	70	70	70	70	67	70	70	64	70	67	62	70	63	59	70	60	55	69	56	51	65	53	59	62	49	55	60	57	52
		27-45	Interior	76	76	76	76	76	76	76	76	76	76	76	76	76	76	76	76	76	76	76	76	76	74	74	74	72	72	70	69	69	66	67	67	63	65	65	60	63	62	57
			Exposed	76	76	76	76	76	76	76	76	76	76	76	76	76	73	76	76	70	76	74	67	73	69	63	68	64	60	64	61	56	61	59	53	59	55	60	55	52	57	
	D	0-7	Interior	66	66	66	66	66	66	66	66	66	66	66	66	66	66	66	66	66	66	66	66	66	66	66	63	66	66	60	66	64	56	66	61	52	65	58	60	62	55	57
			Exposed	66	66	66	66	66	66	66	66	65	66	66	63	66	66	61	66	66	59	66	65	57	66	61	53	64	58	59	61	54	56	59	50	52	55	58	48	52	55	42
		7-20	Interior	67	67	67	67	67	67	67	67	67	67	67	67	67	67	67	67	67	66	67	67	64	67	67	60	66	63	57	64	60	53	63	57	60	61	54	57	59	51	54
			Exposed	67	67	67	67	67	65	67	67	63	67	67	61	67	65	59	67	63	56	67	61	54	64	57	60	61	53	56	58	60	52	54	57	48	51	53	42	59	50	37
		20-27	Interior	73	73	73	73	73	73	73	73	73	73	73	73	73	73	73	73	73	72	73	73	69	73	69	64	71	65	61	69	62	58	68	59	54	66	56	51	65	53	59
			Exposed	73	73	73	73	73	71	73	73	67	73	70	65	73	67	62	73	65	61	73	63	59	73	59	54	68	55	50	64	52	58	61	59	54	59	56	51	56	52	45
		27-45	Interior	79	79	79	79	79	79	79	79	79	79	79	79	78	78	78	77	77	77	76	76	74	74	74	69	71	71	65	69	67	62	66	64	59	63	61	56	61	59	52
			Exposed	79	79	79	79	79	77	79	79	73	79	77	70	78	74	67	75	71	64	72	68	63	67	64	59	63	61	55	60	58	51	57	54	59	54	51	56	50	59	52
70	B	0-7	Interior	59	59	59	59	59	59	59	59	59	59	59	59	59	59	59	59	59	59	59	59	59	59	59	59	59	59	59	59	59	59	59	59	59	59	59	59	59	59	59
			Exposed	59	59	59	59	59	59	59	59	59	59	59	59	59	59	59	59	59	59	59	59	59	59	59	59	59	59	59	59	59	59	59	59	56	59	59	52	59	59	60
		7-20	Interior	59	59	59	59	59	59	59	59	59	59	59	59	59	59	59	59	59	59	59	59	59	59	59	59	59	59	59	59	59	59	59	59	59	59	59	59	59	59	57
			Exposed	59	59	59	59	59	59	59	59	59	59	59	59	59	59	59	59	59	59	59	59	59	59	59	59	59	59	59	59	59	56	59	59	52	59	57	60	59	54	57
		20-27	Interior	65	65	65	65	65	65	65	65	65	65	65	65	65	65	65	65	65	65	65	65	65	65	65	65	65	65	65	65	65	65	65	65	65	65	65	64	65	65	61
			Exposed	65	65	65	65	65	65	65	65	65	65	65	65	65	65	65	65	65	65	65	65	65	65	65	65	65	65	63	65	64	60	65	62	58	65	59	54	65	56	51
		27-45	Interior	72	72	72	72	72	72	72	72	72	72	72	72	72	72	72	72	72	72	72	72	72	72	72	72	72	72	72	71	71	71	69	69	69	68	68	68	66	66	65
			Exposed	72	72	72	72	72	72	72	72	72	72	72	72	72	72	72	72	72	72	72	72	72	72	72	72	72	72	68	71	71	64	69	67	61	66	64	59	63	61	56
	C	0-7	Interior	59	59	59	59	59	59	59	59	59	59	59	59	59	59	59	59	59	59	59	59	59	59	59	59	59	59	59	59	59	59	59	59	57	59	59	54	59	59	51
			Exposed	59	59	59	59	59	59	59	59	59	59	59	59	59	59	59	59	59	59	59	59	59	59	59	58	59	59	53	59	59	49	59	55	57	59	52	54	57	59	51
		7-20	Interior	59	59	59	59	59	59	59	59	59	59	59	59	59	59	59	59	59	59	59	59	59	59	59	59	59	59	59	59	59	58	59	59	54	58	58	51	58	55	59
			Exposed	59	59	59	59	59	59	59	59	59	59	59	59	59	59	59	59	59	59	59	59	59	59	59	54	59	58	50	59	54	57	59	51	54	56	58	50	52	55	45
		20-27	Interior	65	65	65	65	65	65	65	65	65	65	65	65	65	65	65	65	65	65	65	65	65	65	65	65	65	65	65	65	65	62	64	63	59	63	60	56	62	58	52
			Exposed	65	65	65	65	65	65	65	65	65	65	65	65	65	65	65	65	65	64	65	65	62	65	63	59	65	60	55	65	56	51	64	53	59	62	49	55	60	57	52
		27-45	Interior	72	72	72	72	72	72	72	72	72	72	72	72	72	72	72	72	72	72	72	72	70	70	70	70	68	68	68	66	66	66	64	64	63	63	63	60	61	61	57
			Exposed	72	72	72	72	72	72	72	72	72	72	72	72	72	72	72	72	72	70	72	72	67	70	69	63	68	64	60	64	61	56	61	59	53	59	55	60	55	52	57
	D	0-7	Interior	62	62	62	62	62	62	62	62	62	62	62	62	62	62	62	62	62	62	62	62	62	62	62	62	62	62	60	62	62	56	62	61	52	62	58	60	62	55	57
			Exposed	62	62	62	62	62	62	62	62	62	62	62	62	62	62	61	62	62	59	62	62	57	62	61	53	62	58	59	61	54	56	59	50	52	55	58	48	52	55	42
		7-20	Interior	62	62	62	62	62	62	62	62	62	62	62	62	62	62	62	62	62	62	62	62	62	62	62	60	62	62	57	61	60	53	60	57	60	59	54	57	58	51	54
			Exposed	62	62	62	62	62	62	62	62	62	62	61	62	62	59	62	62	56	62	61	54	62	57	60	61	53	56	58	60	52	54	57	48	51	53	42	59	50	37	
		20-27	Interior	69	69	69	69	69	69	69	69	69	69	69	69	69	69	69	69	69	69	69	69	69	69	69	64	67	65	61	66	62	58	64	59	54	63	56	51	62	53	59
			Exposed	69	69	69	69	69	69	69	69	67	69	69	65	69	67	62	69	65	61	69	63	59	69	59	54	67	55	50	64	52	58	61	59	54	59	56	51	56	52	45
		27-45	Interior	75	75	75	75	75	75	75	75	75	75	75	75	74	74	74	73	73	73	72	72	72	70	70	69	68	68	65	66	66	62	64	64	59	62	61	56	60	59	52
			Exposed	75	75	75	75	75	75	75	75	73	75	75	70	74	74	67	73	71	64	72	68	63	67	64	59	63	61	55	60	58	51	57	54	59	54	51	56	50	59	52
80	B	0-7	Interior	55	55	55	55	55	55	55	55	55	55	55	55	55	55	55	55	55	55	55	55	55	55	55	55	55	55	55	55	55	55	55	55	55	55	55	55	55	55	55
			Exposed	55	55	55	55	55	55	55	55	55	55	55	55	55	55	55	55	55	55	55	55	55	55	55	55	55	55	55	55	55	55	55	55	55	55	55	52	55	55	60
		7-20	Interior	55	55	55	55	55	55	55	55	55	55	55	55	55	55	55	55	55	55	55	55	55	55	55	55	55	55	55	55	55	55	55	55	55	55	55	55	55	55	55
			Exposed	55	55	55	55	55	55	55	55	55	55	55	55	55	55	55	55	55	55	55	55	55	55	55	55	55	55	55	55	55	55	55	55	52	55	55	60	55	54	57
		20-27	Interior	62	62	62	62	62	62	62	62	62	62	62	62	62	62	62	62	62	62	62	62	62	62	62	62	62	62	62	62	62	62	62	62	62	62	62	62	62	62	61
			Exposed	62	62	62	62	62	62	62	62	62	62	62	62	62	62	62	62	62	62	62	62	62	62	62	62	62	62	62	62	62	60	62	62	58	62	59	54	62	56	51
		27-45	Interior	83*	83*	83*	83*	83*	83*	83*	83*	83*	83*	83*	83*	83*	83*	83*	83*	83*	83*	83*	83*	83*	83*	83*	83*	83*	83*	83*	67	67	67	66	66	66	65	65	65	63	63	63
			Exposed	83*	83*	83*	83*	83*	83*	83*	83*	83*	83*	83*	83*	83*	83*	83*	83*	83*	69	83*	83*	69	83*	69	69	69	69	68	67	67	64	66	66	61	65	64	59	63	61	56
	C	0-7	Interior	55	55	55	55	55	55	55	55	55	55	55	55	55	55	55	55	55	55	55	55	55	55	55	55	55	55	55	55	55	55	55	55	55	55	55	54	55	55	51
			Exposed	55	55	55	55	55	55	55	55	55	55	55	55	55	55	55	55	55	55	55	55	55	55	55	53	55	55	53	55	55	49	55	55	57	55	52	54	55	59	51
		7-20	Interior	55	55	55	55	55	55	55	55	55	55	55	55	55	55	55	55	55	55	55	55	55	55	55	55	55	55	55	55	55	55	55	55	54	55	55	51	55	55	59
			Exposed	55	55	55	55	55	55	55	55	55	55	55	55	55	55	55	55	55	55	55	55	55	55	55	54	55	55	50	55	54	57	55	51	54	55	58	50	52	55	45
		20-27	Interior	62	62	62	62	62	62	62	62	62	62	62	62	62	62	62	62	62	62	62	62	62	62	62	62	62	62	62	62	62	62	61	61	59	60	60	56	59	58	52
			Exposed	62	62	62	62	62	62	62	62	62	62	62	62	62	62	62	62	62	62	62	62	62	62	62	59	62	60	55	62	56	51	61	53	59	60	49	55	59	57	52
		27-45	Interior	83*	83*	83*	83*	83*	83*	83*	83*	83*	83*	83*	83*	83*	83*	83*	83*	83*	83*	83*	83*	68	67	67	67	65	65	65	64	64	64	62	62	62	61	61	60	59	59	57
			Exposed	83*	83*	83*	83*	83*	83*	83*	83*	69	83*	83*	69	83*	69	69	69	69	69	68	68	67	67	67	63	65	64	60	64	61	56	61	59	53	59	55	60	55	52	57
	D	0-7	Interior	58	58	58	58	58	58	58	58	58	58	58	58	58	58	58	58	58	58	58	58	58	58	58	58	58	58	58	58	58	56	58	58	52	58	58	60	58	55	57
			Exposed	58	58	58	58	58	58	58	58	58	58	58	58	58	58	58	58	58	58	58	58	57	58	58	53	58	58	59	58	54	56	58	50	52	55	58	48	52	55	42
		7-20	Interior	58	58	58	58	58	58	58	58	58	58	58	58	58	58	58	58	58	58	58	58	58	58	58	58	58	58	57	58	58	53	57	57	60	56	54	57	56	51	54
			Exposed	58	58	58	58	58	58	58	58	58	58	58	58	58	58	58	58	58	56	58	58	57	58	58	57	58	58	53	58	58	52	54	57	48	51	53	42	59	50	37
		20-27	Interior	65	65	65	65	65	65	65	65	65	65	65	65	65	65	65	65	65	65	65	65	65	65	65	64	64	64	61	63	62	58	62	59	54	61	56	51	60	53	59
			Exposed	65	65	65	65	65	65	65	65	65	65	65	65	65	62	65	65	61	65	63	59	65	59	59	54	64	55	50	63	52	58	61	59	54	59	56	51	56	52	45
		27-45	Interior	72	72	72	72	72	72	72	72	72	72	72	71	71	71	70	70	70	69	69	69	67	67	67	65	65	65	63	63	63	62	62	62	59	60	60	56	58	58	52
			Exposed	72	72	72	72	72	72	72	72	72	72	72	70	71	71	67	70	70	64	69	68	63	67	64	59	63	61	55	60	58	51	57	54	59	54	51	56	50	59	52

* Cells with an astrisks indicates that the L-foot must be oriented in the Y- direction as indicated in the image.

10 Highlighted cell indicate 3-rail system span. Contact Unirac Engineering Services for support.

~~10~~ Highlighted cell with strikethrough indicate 3-rail system span and module clamp allowable capacity exceeds with 3-rails. 4-Rail system required. Contact Unirac Engineering Services for support.

UNIRAC

ASCE 7-22	II	30 ft	Ss = 1.25	19 sq.ft	LANDSCAPE	CROSS-SLOPE	NXT	NXT COMBO	Stronghold BUTYL Rafter #14S
Design Standard	Risk Category	Roof Height	Seismic	Module Area	Orientation	Rail Direction	Rail Type	Clamp	Attachment

SPAN TABLES

Maximum Allowable Rail Spans for Rooftop Solar Panels Parallel to the Roof Surface (inches)

Ground Snow Load (psf)	Wind Exposure Category	Roof Tilt Angle (deg)	Panel Exposure	Basic Wind Speed (mph)																																						
				90			95			100			105			110			115			120			130			140			150			160			170			180		
				Roof Wind Zone																																						
				1	2	3	1	2	3	1	2	3	1	2	3	1	2	3	1	2	3	1	2	3	1	2	3	1	2	3	1	2	3	1	2	3	1	2	3	1	2	3
90	B	0-7	Interior	52	52	52	52	52	52	52	52	52	52	52	52	52	52	52	52	52	52	52	52	52	52	52	52	52	52	52	52	52	52	52	52	52	52	52	52	52	52	52
			Exposed	52	52	52	52	52	52	52	52	52	52	52	52	52	52	52	52	52	52	52	52	52	52	52	52	52	52	52	52	52	52	52	52	52	52	52	52	52	52	60
		7-20	Interior	52	52	52	52	52	52	52	52	52	52	52	52	52	52	52	52	52	52	52	52	52	52	52	52	52	52	52	52	52	52	52	52	52	52	52	52	52	52	52
			Exposed	52	52	52	52	52	52	52	52	52	52	52	52	52	52	52	52	52	52	52	52	52	52	52	52	52	52	52	52	52	52	52	52	52	52	52	60	52	52	57
		20-27	Interior	58	58	58	58	58	58	58	58	58	58	58	58	58	58	58	58	58	58	58	58	58	58	58	58	58	58	58	58	58	58	58	58	58	58	58	58	58	58	58
			Exposed	58	58	58	58	58	58	58	58	58	58	58	58	58	58	58	58	58	58	58	58	58	58	58	58	58	58	58	58	58	58	58	58	58	58	58	54	58	56	51
		27-45	Interior	73*	73*	73*	73*	73*	73*	73*	73*	73*	73*	73*	73*	73*	73*	73*	73*	73*	73*	73*	73*	73*	73*	73*	73*	73*	73*	73*	71*	71*	71*	73*	73*	73*	78*	62	62	61	61	61
			Exposed	73*	73*	73*	73*	73*	73*	73*	73*	73*	73*	73*	73*	73*	73*	73*	73*	73*	73*	73*	73*	73*	73*	73*	73*	73*	73*	65	71*	71*	64	63	63	61	62	62	59	61	61	56
	C	0-7	Interior	52	52	52	52	52	52	52	52	52	52	52	52	52	52	52	52	52	52	52	52	52	52	52	52	52	52	52	52	52	52	52	52	52	52	52	52	52	52	51
			Exposed	52	52	52	52	52	52	52	52	52	52	52	52	52	52	52	52	52	52	52	52	52	52	52	52	52	52	52	52	52	49	52	52	57	52	52	54	52	59	51
		7-20	Interior	52	52	52	52	52	52	52	52	52	52	52	52	52	52	52	52	52	52	52	52	52	52	52	52	52	52	52	52	52	52	52	52	52	52	52	51	52	52	59
			Exposed	52	52	52	52	52	52	52	52	52	52	52	52	52	52	52	52	52	52	52	52	52	52	52	52	52	52	50	52	52	57	52	51	54	52	58	50	52	55	45
		20-27	Interior	58	58	58	58	58	58	58	58	58	58	58	58	58	58	58	58	58	58	58	58	58	58	58	58	58	58	58	58	58	58	58	58	58	58	58	56	57	57	52
			Exposed	58	58	58	58	58	58	58	58	58	58	58	58	58	58	58	58	58	58	58	58	58	58	58	58	58	58	55	58	56	51	58	53	59	58	49	55	57	57	52
		27-45	Interior	73*	73*	73*	73*	73*	73*	73*	73*	73*	73*	73*	73*	73*	73*	73*	73*	73*	73*	72*	72*	72*	74*	74*	74*	75*	75*	63	61	61	61	60	60	60	59	59	59	57	57	57
			Exposed	73*	73*	73*	73*	73*	73*	73*	73*	73*	73*	73*	73*	73*	73*	73*	73*	73*	65	72*	72*	65	73*	64	63	63	63	60	61	61	56	60	59	53	59	55	60	55	52	57
	D	0-7	Interior	55	55	55	55	55	55	55	55	55	55	55	55	55	55	55	55	55	55	55	55	55	55	55	55	55	55	55	55	55	55	55	55	52	55	55	60	55	55	57
			Exposed	55	55	55	55	55	55	55	55	55	55	55	55	55	55	55	55	55	55	55	55	55	55	55	53	55	55	59	55	54	56	55	50	52	55	58	48	52	55	42
		7-20	Interior	55	55	55	55	55	55	55	55	55	55	55	55	55	55	55	55	55	55	55	55	55	55	55	55	55	55	55	55	55	53	55	55	60	54	54	57	53	51	54
			Exposed	55	55	55	55	55	55	55	55	55	55	55	55	55	55	55	55	55	55	55	55	54	55	55	60	55	53	56	55	60	52	54	57	48	51	53	42	59	50	37
		20-27	Interior	61	61	61	61	61	61	61	61	61	61	61	61	61	61	61	61	61	61	61	61	61	61	61	61	61	61	61	61	61	58	59	59	54	58	56	51	57	53	59
			Exposed	61	61	61	61	61	61	61	61	61	61	61	61	61	61	61	61	61	61	61	61	59	61	59	54	61	55	50	61	52	58	59	59	54	58	56	51	56	52	45
		27-45	Interior	82*	82*	82*	82*	82*	82*	82*	82*	82*	82*	82*	82*	82*	82*	68	67	67	67	66	66	66	65	65	65	63	63	63	61	61	61	60	60	59	58	58	56	57	57	52
			Exposed	82*	82*	69	82*	82*	69	82*	69	69	82*	69	69	68	68	67	67	67	64	66	66	63	65	64	59	63	61	55	60	58	51	57	54	59	54	51	56	50	59	52
100	B	0-7	Interior	49	49	49	49	49	49	49	49	49	49	49	49	49	49	49	49	49	49	49	49	49	49	49	49	49	49	49	49	49	49	49	49	49	49	49	49	49	49	49
			Exposed	49	49	49	49	49	49	49	49	49	49	49	49	49	49	49	49	49	49	49	49	49	49	49	49	49	49	49	49	49	49	49	49	49	49	49	49	49	49	60
		7-20	Interior	50	50	50	50	50	50	50	50	50	50	50	50	50	50	50	50	50	50	50	50	50	50	50	50	50	50	50	50	50	50	50	50	50	50	50	50	50	50	50
			Exposed	50	50	50	50	50	50	50	50	50	50	50	50	50	50	50	50	50	50	50	50	50	50	50	50	50	50	50	50	50	50	50	50	50	50	50	60	50	50	57
		20-27	Interior	55	55	55	55	55	55	55	55	55	55	55	55	55	55	55	55	55	55	55	55	55	55	55	55	55	55	55	55	55	55	55	55	55	55	55	55	55	55	55
			Exposed	55	55	55	55	55	55	55	55	55	55	55	55	55	55	55	55	55	55	55	55	55	55	55	55	55	55	55	55	55	55	55	55	55	55	55	54	55	55	51
		27-45	Interior	66*	66*	66*	66*	66*	66*	66*	66*	66*	66*	66*	66*	66*	66*	66*	66*	66*	66*	66*	66*	66*	66*	66*	66*	66*	66*	66*	65*	65*	65*	64*	64*	64*	66*	66*	66*	67*	67*	59
			Exposed	66*	66*	66*	66*	66*	66*	66*	66*	66*	66*	66*	66*	66*	66*	66*	66*	66*	66*	66*	66*	66*	66*	66*	66*	66*	66*	66*	65*	65*	64*	64*	64*	61	66*	60	59	59	59	56
	C	0-7	Interior	49	49	49	49	49	49	49	49	49	49	49	49	49	49	49	49	49	49	49	49	49	49	49	49	49	49	49	49	49	49	49	49	49	49	49	49	49	49	49
			Exposed	49	49	49	49	49	49	49	49	49	49	49	49	49	49	49	49	49	49	49	49	49	49	49	49	49	49	49	49	49	49	49	49	57	49	49	54	49	59	51
		7-20	Interior	50	50	50	50	50	50	50	50	50	50	50	50	50	50	50	50	50	50	50	50	50	50	50	50	50	50	50	50	50	50	50	50	50	50	50	50	50	50	59
			Exposed	50	50	50	50	50	50	50	50	50	50	50	50	50	50	50	50	50	50	50	50	50	50	50	50	50	50	50	50	50	57	50	50	54	50	58	50	50	55	45
		20-27	Interior	55	55	55	55	55	55	55	55	55	55	55	55	55	55	55	55	55	55	55	55	55	55	55	55	55	55	55	55	55	55	55	55	55	55	55	55	55	55	52
			Exposed	55	55	55	55	55	55	55	55	55	55	55	55	55	55	55	55	55	55	55	55	55	55	55	55	55	55	55	55	55	51	55	53	59	55	49	55	55	57	52
		27-45	Interior	66*	66*	66*	66*	66*	66*	66*	66*	66*	66*	66*	66*	66*	66*	66*	66*	66*	66*	66*	66*	66*	65*	65*	65*	66*	66*	66*	67*	67*	66*	68*	68*	58	57	57	57	56	56	56
			Exposed	66*	66*	66*	66*	66*	66*	66*	66*	66*	66*	66*	66*	66*	66*	66*	66*	66*	66*	66*	66*	66*	65*	65*	62	66*	65*	60	59	59	56	58	58	53	57	55	60	55	52	57
	D	0-7	Interior	52	52	52	52	52	52	52	52	52	52	52	52	52	52	52	52	52	52	52	52	52	52	52	52	52	52	52	52	52	52	52	52	52	52	52	60	52	52	57
			Exposed	52	52	52	52	52	52	52	52	52	52	52	52	52	52	52	52	52	52	52	52	52	52	52	59	52	52	56	52	50	52	52	58	48	52	55	42	52	55	42
		7-20	Interior	52	52	52	52	52	52	52	52	52	52	52	52	52	52	52	52	52	52	52	52	52	52	52	52	52	52	52	52	52	52	52	52	60	52	52	57	52	51	54
			Exposed	52	52	52	52	52	52	52	52	52	52	52	52	52	52	52	52	52	52	52	52	60	52	52	56	52	60	52	52	57	48	51	53	42	59	50	37	59	50	37
		20-27	Interior	58	58	58	58	58	58	58	58	58	58	58	58	58	58	58	58	58	58	58	58	58	58	58	58	58	58	58	58	58	58	57	57	54	56	56	51	56	53	59
			Exposed	58	58	58	58	58	58	58	58	58	58	58	58	58	58	58	58	58	58	58	58	58	58	58	54	58	55	50	58	52	58	57	59	54	56	56	51	56	52	45
		27-45	Interior	73*	73*	73*	73*	73*	73*	73*	73*	73*	73*	73*	73*	72*	72*	72*	71*	71*	71*	74*	74*	74*	78*	62	62	61	61	61	60	60	60	58	58	58	57	57	56	55	55	52
			Exposed	73*	73*	73*	73*	73*	73*	73*	73*	73*	73*	73*	65	72*	72*	65	71*	71*	64	64	64	63	62	62	59	61	61	55	60	58	51	57	54	59	54	51	56	50	59	52

*	Cells with an astrisks indicates that the L-foot must be oriented in the Y- direction as indicated in the image.
10	Highlighted cell indicate 3-rail system span. Contact Unirac Engineering Services for support.
~~10~~	Highlighted cell with strikethrough indicate 3-rail system span and module clamp allowable capacity exceeds with 3-rails. 4-Rail system required. Contact Unirac Engineering Services for support.

UNIRAC

ASCE 7-22	II	30 ft	Ss = 1.25	23 sq.ft	PORTRAIT	CROSS-SLOPE	NXT	NXT COMBO	Stronghold BUTYL Rafter #14S
Design Standard	Risk Category	Roof Height	Seismic	Module Area	Orientation	Rail Direction	Rail Type	Clamp	Attachment

SPAN TABLES

Maximum Allowable Rail Spans for Rooftop Solar Panels Parallel to the Roof Surface (inches)

Ground Snow Load (psf)	Wind Exposure Category	Roof Tilt Angle (deg)	Panel Exposure	Basic Wind Speed (mph)																																						
				90			95			100			105			110			115			120			130			140			150			160			170			180		
				Roof Wind Zone																																						
				1	2	3	1	2	3	1	2	3	1	2	3	1	2	3	1	2	3	1	2	3	1	2	3	1	2	3	1	2	3	1	2	3	1	2	3	1	2	3
0	B	0-7	Interior	79	79	79	79	79	79	79	79	79	79	79	77	79	79	74	79	79	71	79	77	68	79	72	64	77	68	60	73	64	56	69	61	52	66	58	44	63	54	37
			Exposed	79	79	73	79	79	70	79	76	67	79	73	65	79	70	62	77	68	60	74	66	58	69	61	52	65	58	43	62	53	35	59	47	31	55	39	41	51	34	36
		7-20	Interior	79	79	79	79	79	79	79	79	78	79	79	75	79	79	72	79	78	69	79	75	66	79	70	62	75	66	58	71	62	53	67	59	46	63	54	37	61	50	32
			Exposed	79	79	71	79	77	68	79	74	65	79	71	63	78	68	60	75	65	58	72	63	55	67	59	46	63	54	36	59	46	31	55	37	41	51	32	36	41	28	32
		20-27	Interior	79	79	79	79	79	79	79	79	79	79	79	79	79	79	78	79	79	75	79	78	72	79	73	67	79	68	63	78	64	60	74	61	55	70	57	51	67	53	41
			Exposed	79	79	78	79	79	74	79	77	71	79	73	68	79	70	65	79	68	63	79	65	61	74	61	56	70	57	50	66	52	39	62	42	33	59	35	29	56	31	39
		27-45	Interior	80	80	80	80	80	80	80	80	80	80	80	80	80	80	80	80	80	79	80	80	77	80	78	72	79	73	67	74	69	63	70	65	60	66	62	57	63	59	52
			Exposed	80	80	80	80	80	79	80	80	75	80	78	72	80	75	69	78	73	67	75	70	65	70	66	60	66	62	56	62	58	51	59	54	42	54	49	35	50	40	31
	C	0-7	Interior	79	79	75	79	79	72	79	78	69	79	75	66	79	72	64	79	69	61	76	67	59	71	63	54	67	59	47	63	55	38	60	50	32	57	42	43	53	36	38
			Exposed	79	72	63	78	69	61	75	66	58	72	63	55	69	61	51	67	59	46	64	56	40	60	51	33	56	41	42	51	34	37	43	30	32	36	40	28	32	35	25
		7-20	Interior	79	79	73	79	79	70	79	75	67	79	72	64	79	69	62	76	67	59	74	65	57	69	60	51	64	56	39	61	51	33	57	41	29	53	34	38	46	30	34
			Exposed	79	69	62	76	66	59	72	63	55	69	61	52	67	59	45	64	55	38	62	52	34	57	41	29	52	33	37	42	29	32	34	38	28	30	34	25	41	30	22
		20-27	Interior	79	79	79	79	79	76	79	78	72	79	75	69	79	72	67	79	69	64	79	67	62	76	62	58	71	59	52	67	54	42	64	47	34	61	37	30	58	33	41
			Exposed	79	72	67	79	69	64	79	66	61	77	63	58	74	61	55	71	58	52	68	55	46	64	48	35	60	36	30	56	31	39	52	41	34	44	36	30	37	32	27
		27-45	Interior	80	80	80	80	80	80	80	80	77	80	80	74	80	77	71	80	74	68	77	72	66	72	67	62	67	63	58	64	60	53	60	56	46	56	52	37	52	44	32
			Exposed	80	77	71	79	73	68	76	70	65	72	68	62	70	65	60	67	63	57	65	61	54	60	56	46	56	51	36	51	41	31	40	34	41	34	30	36	30	41	32
	D	0-7	Interior	79	79	70	79	75	67	79	72	64	79	69	61	76	67	59	73	65	56	71	62	53	66	59	45	62	53	36	59	47	31	55	39	41	51	33	36	43	30	32
			Exposed	76	67	59	72	64	55	69	61	52	67	59	46	64	56	40	62	53	35	60	50	32	55	39	41	50	33	35	40	43	31	34	38	27	30	33	24	40	29	21
		7-20	Interior	79	77	68	79	73	65	79	70	62	77	67	60	74	64	57	71	62	53	68	60	50	64	55	37	60	48	31	55	37	41	51	32	36	41	43	32	34	38	28
			Exposed	73	64	56	70	62	52	67	59	46	64	55	39	62	52	34	60	47	31	57	40	43	51	32	36	40	42	31	33	36	27	29	32	24	38	28	21	34	25	19
		20-27	Interior	79	79	74	79	76	70	79	73	67	79	70	64	79	67	62	78	64	60	75	62	57	70	58	51	66	52	40	63	43	33	59	35	29	55	31	38	52	41	34
			Exposed	79	67	62	77	64	59	74	61	55	71	59	52	68	55	46	66	52	39	64	46	34	60	35	29	55	30	38	50	39	33	40	34	29	34	30	25	30	27	22
		27-45	Interior	80	80	78	80	80	75	80	78	71	80	74	69	77	72	66	74	69	64	71	67	61	67	62	57	63	59	52	59	54	42	54	49	35	49	40	30	40	34	41
			Exposed	77	71	66	73	68	63	70	66	60	67	63	58	65	61	54	62	59	51	60	56	45	55	49	35	48	39	30	37	33	39	32	43	34	42	38	30	38	34	27
10	B	0-7	Interior	71	71	71	71	71	71	71	71	71	71	71	71	71	71	71	71	71	71	71	71	68	71	71	64	71	68	60	71	64	56	69	61	52	66	58	44	63	54	37
			Exposed	71	71	71	71	71	70	71	71	67	71	71	65	71	70	62	71	68	60	71	66	58	69	61	52	65	58	43	62	53	35	59	47	31	55	39	41	51	34	36
		7-20	Interior	71	71	71	71	71	71	71	71	71	71	71	71	71	71	71	71	71	69	71	71	66	71	70	62	71	66	58	71	62	53	67	59	46	63	54	37	61	50	32
			Exposed	71	71	71	71	71	68	71	71	65	71	71	63	71	68	60	71	65	58	71	63	55	67	59	46	63	54	36	59	46	31	55	37	41	51	32	36	41	28	32
		20-27	Interior	76	76	76	76	76	76	76	76	76	76	76	76	76	76	76	76	76	75	76	76	72	76	73	67	76	68	63	76	64	60	74	61	55	70	57	51	67	53	41
			Exposed	76	76	76	76	76	74	76	76	71	76	73	68	76	70	65	76	68	63	76	65	61	74	61	56	70	57	50	66	52	39	62	42	33	59	35	29	56	31	39
		27-45	Interior	79	79	79	79	79	79	79	79	79	79	79	79	79	79	79	79	79	79	79	79	77	79	78	72	79	73	67	74	69	63	70	65	60	66	62	57	63	59	52
			Exposed	79	79	79	79	79	79	79	79	75	79	78	72	79	75	69	78	73	67	75	70	65	70	66	60	66	62	56	62	58	51	59	54	42	54	49	35	50	40	31
	C	0-7	Interior	71	71	71	71	71	71	71	71	69	71	71	66	71	71	64	71	69	61	71	67	59	71	63	54	67	59	47	63	55	38	60	50	32	57	42	43	53	36	38
			Exposed	71	71	63	71	69	61	71	66	58	71	63	55	69	61	51	67	59	46	64	56	40	60	51	33	56	41	42	51	34	37	43	30	32	36	40	28	32	35	25
		7-20	Interior	71	71	71	71	71	70	71	71	67	71	71	64	71	69	62	71	67	59	71	65	57	69	60	51	64	56	39	61	51	33	57	41	29	53	34	38	46	30	34
			Exposed	71	69	62	71	66	59	71	63	55	69	61	52	67	59	45	64	55	38	62	52	34	57	41	29	52	33	37	42	29	32	34	38	28	30	34	25	41	30	22
		20-27	Interior	76	76	76	76	76	76	76	76	72	76	75	69	76	72	67	76	69	64	76	67	62	76	62	58	71	59	52	67	54	42	64	47	34	61	37	30	58	33	41
			Exposed	76	72	67	76	69	64	76	66	61	76	63	58	74	61	55	71	58	52	68	55	46	64	48	35	60	36	30	56	31	39	52	41	34	44	36	30	37	32	27
		27-45	Interior	79	79	79	79	79	79	79	79	77	79	79	74	79	77	71	79	74	68	77	72	66	72	67	62	67	63	58	64	60	53	60	56	46	56	52	37	52	44	32
			Exposed	79	77	71	79	73	68	76	70	65	72	68	62	70	65	60	67	63	57	65	61	54	60	56	46	56	51	36	51	41	31	40	34	41	34	30	36	30	41	32
	D	0-7	Interior	71	71	70	71	71	67	71	71	64	71	69	61	71	67	59	71	65	56	71	62	53	66	59	45	62	53	36	59	47	31	55	39	41	51	33	36	43	30	32
			Exposed	71	67	59	71	64	55	69	61	52	67	59	46	64	56	40	62	53	35	60	50	32	55	39	41	50	33	35	40	43	31	34	38	27	30	33	24	40	29	21
		7-20	Interior	71	71	68	71	71	65	71	70	62	71	67	60	71	64	57	71	62	53	68	60	50	64	55	37	60	48	31	55	37	41	51	32	36	41	43	32	34	38	28
			Exposed	71	64	56	70	62	52	67	59	46	64	55	39	62	52	34	60	47	31	57	40	43	51	32	36	40	42	31	33	36	27	29	32	24	38	28	21	34	25	19
		20-27	Interior	77	77	74	77	76	70	77	73	67	77	70	64	77	67	62	77	64	60	75	62	57	70	58	51	66	52	40	63	43	33	59	35	29	55	31	38	52	41	34
			Exposed	77	67	62	77	64	59	74	61	55	71	59	52	68	55	46	66	52	39	64	46	34	60	35	29	55	30	38	50	39	33	40	34	29	34	30	25	30	27	22
		27-45	Interior	80	80	78	80	80	75	80	78	71	80	74	69	77	72	66	74	69	64	71	67	61	67	62	57	63	59	52	59	54	42	54	49	35	49	40	30	40	34	41
			Exposed	77	71	66	73	68	63	70	66	60	67	63	58	65	61	54	62	59	51	60	56	45	55	49	35	48	39	30	37	33	39	32	43	34	42	38	30	38	34	27
20	B	0-7	Interior	61	61	61	61	61	61	61	61	61	61	61	61	61	61	61	61	61	61	61	61	61	61	61	61	61	61	60	61	61	56	61	61	52	61	58	44	61	54	37
			Exposed	61	61	61	61	61	61	61	61	61	61	61	61	61	61	61	61	61	60	61	61	58	61	61	52	61	58	43	61	53	35	59	47	31	55	39	41	51	34	36
		7-20	Interior	61	61	61	61	61	61	61	61	61	61	61	61	61	61	61	61	61	61	61	61	61	61	61	61	61	61	58	61	61	53	61	59	46	61	54	37	61	50	32
			Exposed	61	61	61	61	61	61	61	61	61	61	61	61	61	61	60	61	61	58	61	61	55	61	59	46	61	54	36	59	46	31	55	37	41	51	32	36	41	28	32
		20-27	Interior	67	67	67	67	67	67	67	67	67	67	67	67	67	67	67	67	67	67	67	67	67	67	67	67	67	67	63	67	64	60	67	61	55	67	57	51	67	53	41
			Exposed	67	67	67	67	67	67	67	67	67	67	67	67	67	67	65	67	67	63	67	65	61	67	61	56	67	57	50	66	52	39	62	42	33	59	35	29	56	31	39
		27-45	Interior	71	71	71	71	71	71	71	71	71	71	71	71	71	71	71	71	71	71	71	71	71	71	71	71	71	71	67	71	69	63	69	65	60	66	62	57	63	59	52
			Exposed	71	71	71	71	71	71	71	71	71	71	71	71	71	71	69	71	71	67	71	70	65	70	66	60	66	62	56	62	58	51	59	54	42	54	49	35	50	40	31
	C	0-7	Interior	61	61	61	61	61	61	61	61	61	61	61	61	61	61	61	61	61	61	61	61	59	61	61	54	61	59	47	61	55	38	60	50	32	57	42	43	53	36	38
			Exposed	61	61	61	61	61	61	61	61	58	61	61	55	61	61	51	61	59	46	61	56	40	60	51	33	56	41	42	51	34	37	43	30	32	36	40	28	32	35	25
		7-20	Interior	61	61	61	61	61	61	61	61	61	61	61	61	61	61	61	61	61	59	61	61	57	61	60	51	61	56	39	61	51	33	57	41	29	53	34	38	46	30	34
			Exposed	61	61	61	61	61	59	61	61	55	61	61	52	61	59	45	61	55	38	61	52	34	57	41	29	52	33	37	42	29	32	34	38	28	30	34	25	41	30	22
		20-27	Interior	67	67	67	67	67	67	67	67	67	67	67	67	67	67	67	67	67	64	67	67	62	67	62	58	67	59	52	67	54	42	64	47	34	61	37	30	58	33	41
			Exposed	67	67	67	67	67	64	67	66	61	67	63	58	67	61	55	67	58	52	67	55	46	64	48	35	60	36	30	56	31	39	52	41	34	44	36	30	37	32	27
		27-45	Interior	71	71	71	71	71	71	71	71	71	71	71	71	71	71	71	71	71	68	71	71	66	70	67	62	67	63	58	64	60	53	60	56	46	56	52	37	52	44	32
			Exposed	71	71	71	71	71	68	71	70	65	71	68	62	70	65	60	67	63	57	65	61	54	60	56	46	56	51	36	51	41	31	40	34	41	34	30	36	30	41	32
	D	0-7	Interior	61	61	61	61	61	61	61	61	61	61	61	61	61	61	59	61	61	56	61	61	53	61	59	45	61	53	36	59	47	31	55	39	41	51	33	36	43	30	32
			Exposed	61	61	59	61	61	55	61	61	52	61	59	46	61	56	40	61	53	35	60	50	32	55	39	41	50	33	35	40	43	31	34	38	27	30	33	24	40	29	21
		7-20	Interior	61	61	61	61	61	61	61	61	61	61	61	60	61	61	57	61	61	53	61	60	50	61	55	37	60	48	31	55	37	41	51	32	36	41	43	32	34	38	28
			Exposed	61	61	56	61	61	52	61	59	46	61	55	39	61	52	34	60	47	31	57	40	43	51	32	36	40	42	31	33	36	27	29	32	24	38	28	21	34	25	19
		20-27	Interior	69	69	69	69	69	69	69	69	67	69	69	64	69	67	62	69	64	60	69	62	57	69	58	51	66	52	40	63	43	33	59	35	29	55	31	38	52	41	34
			Exposed	69	67	62	69	64	59	69	61	55	69	59	52	68	55	46	66	52	39	64	46	34	60	35	29	55	30	38	50	39	33	40	34	29	34	30	25	30	27	22
		27-45	Interior	72	72	72	72	72	72	72	72	71	72	72	69	72	72	66	72	69	64	71	67	61	67	62	57	63	59	52	59	54	42	54	49	35	49	40	30	40	34	41
			Exposed	72	71	66	72	68	63	70	66	60	67	63	58	65	61	54	62	59	51	60	56	45	55	49	35	48	39	30	37	33	39	32	43	34	42	38	30	38	34	27

* Cells with an astrisks indicates that the L-foot must be oriented in the Y- direction as indicated in the image.

10 Highlighted cell indicate 3-rail system span. Contact Unirac Engineering Services for support.

~~10~~ Highlighted cell with strikethrough indicate 3-rail system span and module clamp allowable capacity exceeds with 3-rails. 4-Rail system required. Contact Unirac Engineering Services for support.

UNIRAC

ASCE 7-22	II	30 ft	Ss = 1.25	23 sq.ft	PORTRAIT	CROSS-SLOPE	NXT	NXT COMBO	Stronghold BUTYL Rafter #14S
Design Standard	Risk Category	Roof Height	Seismic	Module Area	Orientation	Rail Direction	Rail Type	Clamp	Attachment

SPAN TABLES

Maximum Allowable Rail Spans for Rooftop Solar Panels Parallel to the Roof Surface (inches)

Ground Snow Load (psf)	Wind Exposure Category	Roof Tilt Angle (deg)	Panel Exposure	Basic Wind Speed (mph)																																								
				90			95			100			105			110			115			120			130			140			150			160			170			180		
				Roof Wind Zone																																								
				1	2	3	1	2	3	1	2	3	1	2	3	1	2	3	1	2	3	1	2	3	1	2	3	1	2	3	1	2	3	1	2	3	1	2	3	1	2	3
30	B	0-7	Interior	54	54	54	54	54	54	54	54	54	54	54	54	54	54	54	54	54	54	54	54	54	54	54	54	54	54	54	54	54	54	54	54	52	54	54	44	54	54	37
			Exposed	54	54	54	54	54	54	54	54	54	54	54	54	54	54	54	54	54	54	54	54	54	54	54	52	54	54	43	54	53	35	54	47	31	54	39	41	51	34	36
		7-20	Interior	55	55	55	55	55	55	55	55	55	55	55	55	55	55	55	55	55	55	55	55	55	55	55	55	55	55	55	55	55	53	55	55	46	55	54	37	54	50	32
			Exposed	55	55	55	55	55	55	55	55	55	55	55	55	55	55	55	55	55	55	55	55	55	55	55	46	55	54	36	55	46	31	55	37	41	51	32	36	41	28	32
		20-27	Interior	61	61	61	61	61	61	61	61	61	61	61	61	61	61	61	61	61	61	61	61	61	61	61	61	61	61	61	61	61	60	61	61	55	61	57	51	61	53	41
			Exposed	61	61	61	61	61	61	61	61	61	61	61	61	61	61	61	61	61	61	61	61	61	61	61	56	61	57	50	61	52	39	61	42	33	59	35	29	56	31	39
		27-45	Interior	65	65	65	65	65	65	65	65	65	65	65	65	65	65	65	65	65	65	65	65	65	65	65	65	65	65	65	65	65	63	63	63	60	61	61	57	59	59	52
			Exposed	65	65	65	65	65	65	65	65	65	65	65	65	65	65	65	65	65	65	65	65	65	65	65	60	65	62	56	62	58	51	59	54	42	54	49	35	50	40	31
	C	0-7	Interior	54	54	54	54	54	54	54	54	54	54	54	54	54	54	54	54	54	54	54	54	54	54	54	54	54	54	47	54	54	38	54	50	32	54	42	43	53	36	38
			Exposed	54	54	54	54	54	54	54	54	54	54	54	54	54	54	51	54	54	46	54	54	40	54	51	33	54	41	42	51	34	37	43	30	32	36	40	28	32	35	25
		7-20	Interior	55	55	55	55	55	55	55	55	55	55	55	55	55	55	55	55	55	55	55	55	55	55	55	51	55	55	39	54	51	33	53	41	29	52	34	38	46	30	34
			Exposed	55	55	55	55	55	55	55	55	55	55	55	52	55	55	45	55	55	38	55	52	34	55	41	29	52	33	37	42	29	32	34	38	28	30	34	25	41	30	22
		20-27	Interior	61	61	61	61	61	61	61	61	61	61	61	61	61	61	61	61	61	61	61	61	61	61	61	52	61	59	52	61	54	42	60	47	34	58	37	30	57	33	41
			Exposed	61	61	61	61	61	61	61	61	61	61	61	58	61	61	55	61	58	52	61	55	46	61	48	35	60	36	30	56	31	39	52	41	34	44	36	30	37	32	27
		27-45	Interior	65	65	65	65	65	65	65	65	65	65	65	65	65	65	65	65	65	65	65	65	65	64	64	62	62	62	58	59	59	53	57	56	46	55	52	37	52	44	32
			Exposed	65	65	65	65	65	65	65	65	65	65	65	62	65	65	60	65	63	57	65	61	54	60	56	46	56	51	36	51	41	31	40	34	41	34	30	36	30	41	32
	D	0-7	Interior	54	54	54	54	54	54	54	54	54	54	54	54	54	54	54	54	54	54	54	54	53	54	54	45	54	53	36	54	47	31	54	39	41	51	33	36	43	30	32
			Exposed	54	54	54	54	54	54	54	54	52	54	54	46	54	54	40	54	53	35	54	50	32	54	39	41	50	33	35	40	43	31	34	38	27	30	33	24	40	29	21
		7-20	Interior	55	55	55	55	55	55	55	55	55	55	55	55	55	55	55	55	55	53	55	55	50	55	55	37	54	48	31	53	37	41	51	32	36	41	43	32	34	38	28
			Exposed	55	55	55	55	55	52	55	55	46	55	55	39	55	52	34	55	47	31	55	40	43	51	32	36	40	42	31	33	36	27	29	32	24	38	28	21	34	25	19
		20-27	Interior	63	63	63	63	63	63	63	63	63	63	63	63	63	63	62	63	63	60	63	62	57	63	58	51	63	52	40	61	43	33	59	35	29	55	31	38	52	41	34
			Exposed	63	63	62	63	63	59	63	61	55	63	59	52	63	55	46	63	52	39	63	46	34	60	35	29	55	30	38	50	39	33	40	34	29	34	30	25	30	27	22
		27-45	Interior	67	67	67	67	67	67	67	67	67	67	67	67	67	67	66	67	67	64	65	65	61	63	62	57	60	59	52	57	54	42	54	49	35	49	40	30	40	34	41
			Exposed	67	67	66	67	67	63	67	66	60	67	63	58	65	61	54	62	59	51	60	56	45	55	49	35	48	39	30	37	33	39	32	43	34	42	38	30	38	34	27
40	B	0-7	Interior	52	52	52	52	52	52	52	52	52	52	52	52	52	52	52	52	52	52	52	52	52	52	52	52	52	52	52	52	52	52	52	52	52	52	52	44	52	52	37
			Exposed	52	52	52	52	52	52	52	52	52	52	52	52	52	52	52	52	52	52	52	52	52	52	52	52	52	52	43	52	52	35	52	47	31	52	39	41	51	34	36
		7-20	Interior	53	53	53	53	53	53	53	53	53	53	53	53	53	53	53	53	53	53	53	53	53	53	53	53	53	53	53	53	53	53	53	53	46	53	53	37	52	50	32
			Exposed	53	53	53	53	53	53	53	53	53	53	53	53	53	53	53	53	53	53	53	53	53	53	53	46	53	53	36	53	46	31	53	37	41	51	32	36	41	28	32
		20-27	Interior	56	56	56	56	56	56	56	56	56	56	56	56	56	56	56	56	56	56	56	56	56	56	56	56	56	56	56	56	56	56	56	56	55	56	56	51	56	53	41
			Exposed	56	56	56	56	56	56	56	56	56	56	56	56	56	56	56	56	56	56	56	56	56	56	56	56	56	56	50	56	52	39	56	42	33	56	35	29	56	31	39
		27-45	Interior	61	61	61	61	61	61	61	61	61	61	61	61	61	61	61	61	61	61	61	61	61	61	61	61	61	61	61	60	60	60	58	58	58	57	57	57	55	55	52
			Exposed	61	61	61	61	61	61	61	61	61	61	61	61	61	61	61	61	61	61	61	61	61	61	61	60	61	61	56	60	58	51	58	54	42	54	49	35	50	40	31
	C	0-7	Interior	52	52	52	52	52	52	52	52	52	52	52	52	52	52	52	52	52	52	52	52	52	52	52	52	52	52	47	52	52	38	52	50	32	52	42	43	52	36	38
			Exposed	52	52	52	52	52	52	52	52	52	52	52	52	52	52	51	52	52	46	52	52	40	52	51	33	52	41	42	51	34	37	43	30	32	36	40	28	32	35	25
		7-20	Interior	53	53	53	53	53	53	53	53	53	53	53	53	53	53	53	53	53	53	53	53	53	53	53	51	53	53	39	52	51	33	51	41	29	50	34	38	46	30	34
			Exposed	53	53	53	53	53	53	53	53	53	53	53	52	53	53	45	53	53	38	53	52	34	53	41	29	52	33	37	42	29	32	34	38	28	30	34	25	41	30	22
		20-27	Interior	56	56	56	56	56	56	56	56	56	56	56	56	56	56	56	56	56	56	56	56	56	56	56	52	56	54	42	55	47	34	54	37	30	53	33	41	53	33	41
			Exposed	56	56	56	56	56	56	56	56	56	56	56	56	56	56	55	56	56	52	56	55	46	56	48	35	56	36	30	56	31	39	52	41	34	44	36	30	37	32	27
		27-45	Interior	61	61	61	61	61	61	61	61	61	61	61	61	61	61	61	61	61	61	61	61	61	59	59	59	57	57	57	56	56	53	54	54	46	52	52	37	50	44	32
			Exposed	61	61	61	61	61	61	61	61	61	61	61	61	61	61	60	61	61	57	61	61	54	59	56	46	56	51	36	51	41	31	40	34	41	34	30	36	30	41	32
	D	0-7	Interior	54	54	54	54	54	54	54	54	54	54	54	54	54	54	54	54	54	54	54	54	53	54	54	45	54	53	36	54	47	31	54	39	41	51	33	36	43	30	32
			Exposed	54	54	54	54	54	54	54	54	52	54	54	46	54	54	40	54	53	35	54	50	32	54	39	41	50	33	35	40	43	31	34	38	27	30	33	24	40	29	21
		7-20	Interior	54	54	54	54	54	54	54	54	54	54	54	54	54	54	54	54	54	53	54	54	50	54	54	37	54	48	31	53	37	41	51	32	36	41	43	32	34	38	28
			Exposed	54	54	54	54	54	52	54	54	46	54	54	39	54	52	34	54	47	31	54	40	43	51	32	36	40	42	31	33	36	27	29	32	24	38	28	21	34	25	19
		20-27	Interior	58	58	58	58	58	58	58	58	58	58	58	58	58	58	58	58	58	58	58	58	57	58	58	51	58	52	40	56	43	33	55	35	29	53	31	38	52	41	34
			Exposed	58	58	58	58	58	58	58	58	55	58	58	52	58	55	46	58	52	39	58	46	34	58	35	29	55	30	38	50	39	33	40	34	29	34	30	25	30	27	22
		27-45	Interior	62	62	62	62	62	62	62	62	62	62	62	62	62	62	62	62	62	62	61	61	61	59	59	57	56	56	52	54	54	42	52	49	35	49	40	30	40	34	41
			Exposed	62	62	62	62	62	62	62	62	60	62	62	58	62	61	54	62	59	51	60	56	45	55	49	35	48	39	30	37	33	39	32	43	34	42	38	30	38	34	27
50	B	0-7	Interior	48	48	48	48	48	48	48	48	48	48	48	48	48	48	48	48	48	48	48	48	48	48	48	48	48	48	48	48	48	48	48	48	48	48	48	44	48	48	37
			Exposed	48	48	48	48	48	48	48	48	48	48	48	48	48	48	48	48	48	48	48	48	48	48	48	48	48	48	43	48	48	35	48	47	31	48	39	41	48	34	36
		7-20	Interior	49	49	49	49	49	49	49	49	49	49	49	49	49	49	49	49	49	49	49	49	49	49	49	49	49	49	49	49	49	49	49	49	46	49	49	37	48	48	32
			Exposed	49	49	49	49	49	49	49	49	49	49	49	49	49	49	49	49	49	49	49	49	49	49	49	46	49	49	36	49	46	31	49	37	41	49	32	36	41	28	32
		20-27	Interior	53	53	53	53	53	53	53	53	53	53	53	53	53	53	53	53	53	53	53	53	53	53	53	53	53	53	53	53	53	53	53	53	53	53	53	51	52	52	41
			Exposed	53	53	53	53	53	53	53	53	53	53	53	53	53	53	53	53	53	53	53	53	53	53	53	53	53	53	50	53	52	39	53	42	33	53	35	29	52	31	39
		27-45	Interior	62*	62*	62*	62*	62*	62*	62*	62*	62*	62*	62*	62*	62*	62*	62*	62*	62*	62*	62*	62*	62*	62*	62*	62*	62*	62*	62*	61*	61*	61*	62*	62*	55	54	54	54	52	52	52
			Exposed	62*	62*	62*	62*	62*	62*	62*	62*	62*	62*	62*	62*	62*	62*	62*	62*	62*	62*	62*	62*	62*	62*	62*	61*	62*	62*	56	61*	56	51	55	54	42	54	49	35	50	40	31
	C	0-7	Interior	48	48	48	48	48	48	48	48	48	48	48	48	48	48	48	48	48	48	48	48	48	48	48	48	48	48	47	48	48	38	48	48	32	48	42	43	48	36	38
			Exposed	48	48	48	48	48	48	48	48	48	48	48	48	48	48	48	48	48	46	48	48	40	48	48	33	48	41	42	48	34	37	43	30	32	36	40	28	32	35	25
		7-20	Interior	49	49	49	49	49	49	49	49	49	49	49	49	49	49	49	49	49	49	49	49	49	49	49	49	49	49	39	48	48	33	48	41	29	47	34	38	46	30	34
			Exposed	49	49	49	49	49	49	49	49	49	49	49	49	49	49	45	49	49	38	49	49	34	49	41	29	49	33	37	42	29	32	34	38	28	30	34	25	41	30	22
		20-27	Interior	53	53	53	53	53	53	53	53	53	53	53	53	53	53	53	53	53	53	53	53	53	53	53	52	53	53	52	52	52	42	51	47	34	50	37	30	49	33	41
			Exposed	53	53	53	53	53	53	53	53	53	53	53	53	53	53	53	53	53	52	53	53	46	53	48	35	53	36	30	52	31	39	51	41	34	44	36	30	37	32	27
		27-45	Interior	62*	62*	62*	62*	62*	62*	62*	62*	62*	62*	62*	62*	62*	62*	62*	62*	62*	62*	62*	62*	62*	62*	62*	62*	62*	62*	54	54	54	52	52	52	46	49	49	37	48	44	32
			Exposed	62*	62*	62*	62*	62*	62*	62*	62*	62*	62*	62*	62*	62*	62*	57	62*	62*	57	62*	61*	54	56	56	46	54	51	36	51	41	31	40	34	41	34	30	36	30	41	32
	D	0-7	Interior	50	50	50	50	50	50	50	50	50	50	50	50	50	50	50	50	50	50	50	50	50	50	50	45	50	50	36	50	47	31	50	39	41	50	33	36	43	30	32
			Exposed	50	50	50	50	50	50	50	50	50	50	50	46	50	50	40	50	50	35	50	50	32	50	39	41	50	33	35	40	43	31	34	38	27	30	33	24	40	29	21
		7-20	Interior	51	51	51	51	51	51	51	51	51	51	51	51	51	51	51	51	51	51	51	51	50	51	51	37	50	48	31	49	37	41	48	32	36	41	43	32	34	38	28
			Exposed	51	51	51	51	51	51	51	51	46	51	51	39	51	51	34	51	47	31	51	40	43	51	32	36	40	42	31	33	36	27	29	32	24	38	28	21	34	25	19
		20-27	Interior	54	54	54	54	54	54	54	54	54	54	54	54	54	54	54	54	54	54	54	54	54	54	54	51	54	52	40	53	43	33	51	35	29	50	31	38	49	41	34
			Exposed	54	54	54	54	54	54	54	54	54	54	54	52	54	54	46	54	52	39	54	46	34	54	35	29	54	30	38	50	39	33	40	34	29	34	30	25	30	27	22
		27-45	Interior	59	59	59	59	59	59	59	59	59	59	59	59	59	59	59	58	58	58	57	57	57	55	55	55	53	53	52	52	52	42	50	49	35	48	40	30	40	34	41
			Exposed	59	59	59	59	59	59	59	59	59	59	59	58	59	59	54	58	58	51	57	56	45	55	49	35	48	39	30	37	33	39	32	43	34	42	38	30	38	34	27

* Cells with an astrisks indicates that the L-foot must be oriented in the Y- direction as indicated in the image.

10 Highlighted cell indicate 3-rail system span. Contact Unirac Engineering Services for support.

~~10~~ Highlighted cell with strikethrough indicate 3-rail system span and module clamp allowable capacity exceeds with 3-rails. 4-Rail system required. Contact Unirac Engineering Services for support.

UNIRAC

ASCE 7-22	II	30 ft	Ss = 1.25	23 sq.ft	PORTRAIT	CROSS-SLOPE	NXT	NXT COMBO	Stronghold BUTYL Rafter #14S
Design Standard	Risk Category	Roof Height	Seismic	Module Area	Orientation	Rail Direction	Rail Type	Clamp	Attachment

SPAN TABLES

Maximum Allowable Rail Spans for Rooftop Solar Panels Parallel to the Roof Surface (inches)

Ground Snow Load (psf)	Wind Exposure Category	Roof Tilt Angle (deg)	Panel Exposure	Basic Wind Speed (mph)																																						
				90			95			100			105			110			115			120			130			140			150			160			170			180		
				Roof Wind Zone																																						
				1	2	3	1	2	3	1	2	3	1	2	3	1	2	3	1	2	3	1	2	3	1	2	3	1	2	3	1	2	3	1	2	3	1	2	3	1	2	3
60	B	0-7	Interior	45	45	45	45	45	45	45	45	45	45	45	45	45	45	45	45	45	45	45	45	45	45	45	45	45	45	45	45	45	45	45	45	45	45	45	44	45	45	37
			Exposed	45	45	45	45	45	45	45	45	45	45	45	45	45	45	45	45	45	45	45	45	45	45	45	45	45	45	43	45	45	35	45	45	31	45	39	41	45	34	36
		7-20	Interior	45	45	45	45	45	45	45	45	45	45	45	45	45	45	45	45	45	45	45	45	45	45	45	45	45	45	45	45	45	45	45	45	45	45	45	37	45	45	32
			Exposed	45	45	45	45	45	45	45	45	45	45	45	45	45	45	45	45	45	45	45	45	45	45	45	45	45	45	36	45	45	31	45	37	41	45	32	36	41	28	32
		20-27	Interior	50	50	50	50	50	50	50	50	50	50	50	50	50	50	50	50	50	50	50	50	50	50	50	50	50	50	50	50	50	50	50	50	50	50	50	50	49	49	41
			Exposed	50	50	50	50	50	50	50	50	50	50	50	50	50	50	50	50	50	50	50	50	50	50	50	50	50	50	50	50	50	39	50	42	33	50	35	29	49	31	39
		27-45	Interior	54*	54*	54*	54*	54*	54*	54*	54*	54*	54*	54*	54*	54*	54*	54*	54*	54*	54*	54*	54*	54*	54*	54*	54*	54*	54*	54*	53*	53*	53*	52*	52*	52*	53*	53*	53*	52*	52*	52*
			Exposed	54*	54*	54*	54*	54*	54*	54*	54*	54*	54*	54*	54*	54*	54*	54*	54*	54*	54*	54*	54*	54*	54*	54*	54*	54*	54*	54*	53*	53*	51	52*	52*	42	53*	49	35	50	40	31
	C	0-7	Interior	45	45	45	45	45	45	45	45	45	45	45	45	45	45	45	45	45	45	45	45	45	45	45	45	45	45	45	45	45	38	45	45	32	45	42	43	45	36	38
			Exposed	45	45	45	45	45	45	45	45	45	45	45	45	45	45	45	45	45	45	45	45	40	45	45	33	45	41	42	45	34	37	43	30	32	36	40	28	32	35	25
		7-20	Interior	45	45	45	45	45	45	45	45	45	45	45	45	45	45	45	45	45	45	45	45	45	45	45	45	45	45	39	45	45	33	45	41	29	44	34	38	43	30	34
			Exposed	45	45	45	45	45	45	45	45	45	45	45	45	45	45	45	45	45	38	45	45	34	45	41	29	45	33	37	42	29	32	34	38	28	30	34	25	41	30	22
		20-27	Interior	50	50	50	50	50	50	50	50	50	50	50	50	50	50	50	50	50	50	50	50	50	50	50	50	50	50	50	49	49	42	48	47	34	47	37	30	46	33	41
			Exposed	50	50	50	50	50	50	50	50	50	50	50	50	50	50	50	50	50	50	50	50	46	50	48	35	50	36	30	49	31	39	48	41	34	44	36	30	37	32	27
		27-45	Interior	54*	54*	54*	54*	54*	54*	54*	54*	54*	54*	54*	54*	54*	54*	54*	54*	54*	54*	54*	54*	54*	53*	53*	53*	53*	53*	53*	52*	52*	52*	52*	52*	46	54*	47	37	46	44	32
			Exposed	54*	54*	54*	54*	54*	54*	54*	54*	54*	54*	54*	54*	54*	54*	54*	54*	54*	54*	54*	54*	54*	53*	53*	46	53*	51	36	50	41	31	40	34	41	34	30	36	30	41	32
	D	0-7	Interior	47	47	47	47	47	47	47	47	47	47	47	47	47	47	47	47	47	47	47	47	47	47	47	45	47	47	36	47	47	31	47	39	41	47	33	36	43	30	32
			Exposed	47	47	47	47	47	47	47	47	47	47	47	46	47	47	40	47	47	35	47	47	32	47	39	41	47	33	35	40	43	31	34	38	27	30	33	24	40	29	21
		7-20	Interior	47	47	47	47	47	47	47	47	47	47	47	47	47	47	47	47	47	47	47	47	47	47	47	37	47	47	31	46	37	41	45	32	36	41	43	32	34	38	28
			Exposed	47	47	47	47	47	47	47	47	46	47	47	39	47	47	34	47	47	31	47	40	43	47	32	36	40	42	31	33	36	27	29	32	24	38	28	21	34	25	19
		20-27	Interior	51	51	51	51	51	51	51	51	51	51	51	51	51	51	51	51	51	51	51	51	51	51	51	51	51	51	40	50	43	33	49	35	29	48	31	38	46	41	34
			Exposed	51	51	51	51	51	51	51	51	51	51	51	51	51	51	46	51	51	39	51	46	34	51	35	29	51	30	38	50	39	33	40	34	29	34	30	25	30	27	22
		27-45	Interior	58*	58*	58*	58*	58*	58*	58*	58*	58*	58*	58*	58*	58*	58*	58*	57*	57*	57*	59*	59*	59*	57*	57*	57*	51	51	51	49	49	42	48	48	35	46	40	30	40	34	41
			Exposed	58*	58*	58*	58*	58*	58*	58*	58*	58*	58*	58*	58*	58*	54	57*	57*	51	59*	54	45	53	49	35	48	39	30	37	33	39	32	43	34	42	38	30	38	34	27
70	B	0-7	Interior	41	41	41	41	41	41	41	41	41	41	41	41	41	41	41	41	41	41	41	41	41	41	41	41	41	41	41	41	41	41	41	41	41	41	41	41	41	41	37
			Exposed	41	41	41	41	41	41	41	41	41	41	41	41	41	41	41	41	41	41	41	41	41	41	41	41	41	41	41	41	41	35	41	41	31	41	39	41	41	34	36
		7-20	Interior	42	42	42	42	42	42	42	42	42	42	42	42	42	42	42	42	42	42	42	42	42	42	42	42	42	42	42	42	42	42	42	42	42	42	42	37	42	42	32
			Exposed	42	42	42	42	42	42	42	42	42	42	42	42	42	42	42	42	42	42	42	42	42	42	42	42	42	42	36	42	42	31	42	37	41	42	32	36	41	28	32
		20-27	Interior	49*	49*	49*	49*	49*	49*	49*	49*	49*	49*	49*	49*	49*	49*	49*	49*	49*	49*	49*	49*	49*	49*	49*	49*	49*	49*	49*	49*	49*	49*	49*	49*	49*	49*	49*	49*	49*	49*	41
			Exposed	49*	49*	49*	49*	49*	49*	49*	49*	49*	49*	49*	49*	49*	49*	49*	49*	49*	49*	49*	49*	49*	49*	49*	49*	49*	49*	49*	49*	49*	39	49*	42	33	49*	35	29	49*	31	39
		27-45	Interior	51*	51*	51*	51*	51*	51*	51*	51*	51*	51*	51*	51*	51*	51*	51*	51*	51*	51*	51*	51*	51*	51*	51*	51*	51*	51*	51*	50*	50*	50*	49*	49*	49*	48*	48*	48*	47*	47*	47*
			Exposed	51*	51*	51*	51*	51*	51*	51*	51*	51*	51*	51*	51*	51*	51*	51*	51*	51*	51*	51*	51*	51*	51*	51*	51*	51*	51*	51*	50*	50*	50*	49*	49*	42	48*	48*	35	47*	40	31
	C	0-7	Interior	41	41	41	41	41	41	41	41	41	41	41	41	41	41	41	41	41	41	41	41	41	41	41	41	41	41	41	41	41	38	41	41	32	41	41	43	41	36	38
			Exposed	41	41	41	41	41	41	41	41	41	41	41	41	41	41	41	41	41	41	41	41	40	41	41	33	41	41	42	41	34	37	41	30	32	36	40	28	32	35	25
		7-20	Interior	42	42	42	42	42	42	42	42	42	42	42	42	42	42	42	42	42	42	42	42	42	42	42	42	42	42	39	42	42	33	42	41	29	42	34	38	41	30	34
			Exposed	42	42	42	42	42	42	42	42	42	42	42	42	42	42	42	42	42	38	42	42	34	42	41	29	42	33	37	42	29	32	34	38	28	30	34	25	41	30	22
		20-27	Interior	49*	49*	49*	49*	49*	49*	49*	49*	49*	49*	49*	49*	49*	49*	49*	49*	49*	49*	49*	49*	49*	49*	49*	49*	49*	49*	49*	49*	49*	42	48*	47*	34	47*	37	30	44	33	41
			Exposed	49*	49*	49*	49*	49*	49*	49*	49*	49*	49*	49*	49*	49*	49*	49*	49*	49*	49*	49*	49*	46	49*	48*	35	49*	36	30	49*	31	39	48*	41	34	44	36	30	37	32	27
		27-45	Interior	51*	51*	51*	51*	51*	51*	51*	51*	51*	51*	51*	51*	51*	51*	51*	51*	51*	51*	51*	51*	51*	50*	50*	50*	49*	49*	49*	48*	48*	48*	46*	46*	46*	47*	47*	37	45*	44	32
			Exposed	51*	51*	51*	51*	51*	51*	51*	51*	51*	51*	51*	51*	51*	51*	51*	51*	51*	51*	51*	51*	45	50*	50*	35	49*	39	36	48*	41	31	40	34	41	34	30	36	30	41	32
	D	0-7	Interior	44	44	44	44	44	44	44	44	44	44	44	44	44	44	44	44	44	44	44	44	44	44	44	44	44	44	36	44	44	31	44	39	41	44	33	36	43	30	32
			Exposed	44	44	44	44	44	44	44	44	44	44	44	44	44	44	40	44	44	35	44	44	32	44	39	41	44	33	35	40	43	31	34	38	27	30	33	24	40	29	21
		7-20	Interior	44	44	44	44	44	44	44	44	44	44	44	44	44	44	44	44	44	44	44	44	44	44	44	37	44	44	31	44	37	41	43	32	36	41	43	32	34	38	28
			Exposed	44	44	44	44	44	44	44	44	44	44	44	39	44	44	34	44	44	31	44	40	43	44	32	36	40	42	31	33	36	27	29	32	24	38	28	21	34	25	19
		20-27	Interior	49	49	49	49	49	49	49	49	49	49	49	49	49	49	49	49	49	49	49	49	49	49	49	49	48	48	40	47	43	33	46	35	29	45	31	38	44	41	34
			Exposed	49	49	49	49	49	49	49	49	49	49	49	49	49	46	49	49	39	49	46	34	49	35	29	48	30	38	47	39	33	40	34	29	34	30	25	30	27	22
		27-45	Interior	53*	53*	53*	53*	53*	53*	53*	53*	53*	53*	53*	53*	53*	53*	53*	52*	52*	52*	52*	52*	52*	50*	50*	50*	51*	51*	51*	49*	49*	42	51*	46	35	44	40	30	40	34	41
			Exposed	53*	53*	53*	53*	53*	53*	53*	53*	53*	53*	53*	53*	53*	53*	53*	52*	52*	51*	52*	52*	45	50*	50*	35	48	39	30	37	33	39	32	43	34	42	38	30	38	34	27
80	B	0-7	Interior	39	39	39	39	39	39	39	39	39	39	39	39	39	39	39	39	39	39	39	39	39	39	39	39	39	39	39	39	39	39	39	39	39	39	39	39	39	39	37
			Exposed	39	39	39	39	39	39	39	39	39	39	39	39	39	39	39	39	39	39	39	39	39	39	39	39	39	39	39	39	39	35	39	39	31	39	39	41	39	34	36
		7-20	Interior	39	39	39	39	39	39	39	39	39	39	39	39	39	39	39	39	39	39	39	39	39	39	39	39	39	39	39	39	39	39	39	39	39	39	39	37	39	39	32
			Exposed	39	39	39	39	39	39	39	39	39	39	39	39	39	39	39	39	39	39	39	39	39	39	39	39	39	39	36	39	39	31	39	37	41	39	32	36	39	28	32
		20-27	Interior	46*	46*	46*	46*	46*	46*	46*	46*	46*	46*	46*	46*	46*	46*	46*	46*	46*	46*	46*	46*	46*	46*	46*	46*	46*	46*	46*	46*	46*	46*	46*	46*	46*	46*	46*	46*	46*	46*	41
			Exposed	46*	46*	46*	46*	46*	46*	46*	46*	46*	46*	46*	46*	46*	46*	46*	46*	46*	46*	46*	46*	46*	46*	46*	46*	46*	46*	46*	46*	46*	39	46*	42*	33	46*	35	29	46*	31	39
		27-45	Interior	49*	49*	49*	49*	49*	49*	49*	49*	49*	49*	49*	49*	49*	49*	49*	49*	49*	49*	49*	49*	49*	49*	49*	49*	49*	49*	49*	48*	48*	48*	47*	47*	47*	46*	46*	46*	45*	45*	45*
			Exposed	49*	49*	49*	49*	49*	49*	49*	49*	49*	49*	49*	49*	49*	49*	49*	49*	49*	49*	49*	49*	49*	49*	49*	49*	49*	49*	49*	48*	48*	48*	47*	47*	42*	46*	46*	35	45*	41*	31
	C	0-7	Interior	39	39	39	39	39	39	39	39	39	39	39	39	39	39	39	39	39	39	39	39	39	39	39	39	39	39	39	39	39	38	39	39	32	39	39	43	39	36	38
			Exposed	39	39	39	39	39	39	39	39	39	39	39	39	39	39	39	39	39	39	39	39	39	39	39	39	39	39	42	39	34	37	39	30	32	36	40	28	32	35	25
		7-20	Interior	39	39	39	39	39	39	39	39	39	39	39	39	39	39	39	39	39	39	39	39	39	39	39	39	39	39	39	39	39	33	39	39	29	39	34	38	39	30	34
			Exposed	39	39	39	39	39	39	39	39	39	39	39	39	39	39	39	39	39	38	39	39	34	39	39	29	39	33	37	39	29	32	34	38	28	30	34	25	41	30	22
		20-27	Interior	46*	46*	46*	46*	46*	46*	46*	46*	46*	46*	46*	46*	46*	46*	46*	46*	46*	46*	46*	46*	46*	46*	46*	46*	46*	46*	46*	46*	46*	42*	46*	46*	34	45*	37	30	44*	33	41
			Exposed	46*	46*	46*	46*	46*	46*	46*	46*	46*	46*	46*	46*	46*	46*	46*	46*	46*	46*	46*	46*	46*	46*	46*	35	46*	36	30	46*	31	39	46*	41	34	44*	36	30	37	32	27
		27-45	Interior	49*	49*	49*	49*	49*	49*	49*	49*	49*	49*	49*	49*	49*	49*	49*	49*	49*	49*	49*	49*	49*	48*	48*	48*	47*	47*	47*	46*	46*	46*	44*	44*	44*	43*	43*	37	42*	42*	32
			Exposed	49*	49*	49*	49*	49*	49*	49*	49*	49*	49*	49*	49*	49*	49*	49*	49*	49*	49*	49*	49*	49*	48*	48*	46*	47*	47*	36	46*	41*	31	41*	34	41	34	30	36	30	41	32
	D	0-7	Interior	41	41	41	41	41	41	41	41	41	41	41	41	41	41	41	41	41	41	41	41	41	41	41	41	41	41	36	41	41	31	41	39	41	41	33	36	41	30	32
			Exposed	41	41	41	41	41	41	41	41	41	41	41	41	41	41	40	41	41	35	41	41	32	41	39	41	41	33	35	40	43	31	34	38	27	30	33	24	40	29	21
		7-20	Interior	41	41	41	41	41	41	41	41	41	41	41	41	41	41	41	41	41	41	41	41	41	41	41	37	41	41	31	41	37	41	41	32	36	40	43	32	34	38	28
			Exposed	41	41	41	41	41	41	41	41	41	41	41	39	41	41	34	41	41	31	41	40	43	41	32	36	40	42	31	33	36	27	29	32	24	38	28	21	34	25	19
		20-27	Interior	48*	48*	48*	48*	48*	48*	48*	48*	48*	48*	48*	48*	48*	48*	48*	48*	48*	48*	48*	48*	48*	48*	48*	48*	48*	48*	40	47*	43	33	46*	35	29	43	31	38	42	41	34
			Exposed	48*	48*	48*	48*	48*	48*	48*	48*	48*	48*	48*	48*	48*	46*	48*	48*	39	48*	46*	34	48*	35	29	48*	30	38	47*	39	33	40	34	29	34	30	25	30	27	22
		27-45	Interior	51*	51*	51*	51*	51*	51*	51*	51*	51*	51*	51*	51*	51*	51*	51*	50*	50*	50*	49*	49*	49*	48*	48*	48*	47*	47*	47*	46*	46*	42	44*	44*	35	44*	40	30	40	34	41
			Exposed	51*	51*	51*	51*	51*	51*	51*	51*	51*	51*	51*	51*	51*	51*	51*	50*	50*	50*	49*	49*	45*	48*	48*	35	47*	39	30	37	33	39	32	43	34	42	38	30	38	34	27

* Cells with an astrisks indicates that the L-foot must be oriented in the Y- direction as indicated in the image.

10 Highlighted cell indicate 3-rail system span. Contact Unirac Engineering Services for support.

~~10~~ Highlighted cell with strikethrough indicate 3-rail system span and module clamp allowable capacity exceeds with 3-rails. 4-Rail system required. Contact Unirac Engineering Services for support.

UNIRAC

ASCE 7-22	II	30 ft	Ss = 1.25	23 sq.ft	PORTRAIT	CROSS-SLOPE	NXT	NXT COMBO	Stronghold BUTYL Rafter #14S
Design Standard	Risk Category	Roof Height	Seismic	Module Area	Orientation	Rail Direction	Rail Type	Clamp	Attachment

SPAN TABLES

Maximum Allowable Rail Spans for Rooftop Solar Panels Parallel to the Roof Surface (inches)

Ground Snow Load (psf)	Wind Exposure Category	Roof Tilt Angle (deg)	Panel Exposure	Basic Wind Speed (mph)																																						
				90			95			100			105			110			115			120			130			140			150			160			170			180		
				Roof Wind Zone																																						
				1	2	3	1	2	3	1	2	3	1	2	3	1	2	3	1	2	3	1	2	3	1	2	3	1	2	3	1	2	3	1	2	3	1	2	3	1	2	3
90	B	0-7	Interior	37	37	37	37	37	37	37	37	37	37	37	37	37	37	37	37	37	37	37	37	37	37	37	37	37	37	37	37	37	37	37	37	37	37	37	37	37	37	37
			Exposed	37	37	37	37	37	37	37	37	37	37	37	37	37	37	37	37	37	37	37	37	37	37	37	37	37	37	37	37	37	35	37	37	31	37	37	41	37	34	36
		7-20	Interior	37	37	37	37	37	37	37	37	37	37	37	37	37	37	37	37	37	37	37	37	37	37	37	37	37	37	37	37	37	37	37	37	37	37	37	37	37	37	32
			Exposed	37	37	37	37	37	37	37	37	37	37	37	37	37	37	37	37	37	37	37	37	37	37	37	37	37	37	36	37	37	31	37	37	41	37	32	36	37	28	32
		20-27	Interior	41*	41*	41*	41*	41*	41*	41*	41*	41*	41*	41*	41*	41*	41*	41*	41*	41*	41*	41*	41*	41*	41*	41*	41*	41*	41*	41*	41*	41*	41*	41*	41*	41*	41*	41*	41*	41*	41*	41*
			Exposed	41*	41*	41*	41*	41*	41*	41*	41*	41*	41*	41*	41*	41*	41*	41*	41*	41*	41*	41*	41*	41*	41*	41*	41*	41*	41*	41*	41*	41*	39*	41*	41*	33	41*	35	29	41*	31	39
		27-45	Interior	44*	44*	44*	44*	44*	44*	44*	44*	44*	44*	44*	44*	44*	44*	44*	44*	44*	44*	44*	44*	44*	44*	44*	44*	44*	44*	44*	44*	44*	44*	44*	44*	44*	44*	44*	44*	44*	44*	44*
			Exposed	44*	44*	44*	44*	44*	44*	44*	44*	44*	44*	44*	44*	44*	44*	44*	44*	44*	44*	44*	44*	44*	44*	44*	44*	44*	44*	44*	44*	44*	44*	44*	44*	42*	44*	44*	35	44*	40*	31
	C	0-7	Interior	37	37	37	37	37	37	37	37	37	37	37	37	37	37	37	37	37	37	37	37	37	37	37	37	37	37	37	37	37	37	37	37	32	37	37	43	37	36	38
			Exposed	37	37	37	37	37	37	37	37	37	37	37	37	37	37	37	37	37	37	37	37	37	37	37	37	37	37	37	37	37	37	37	30	32	36	40	28	32	35	25
		7-20	Interior	37	37	37	37	37	37	37	37	37	37	37	37	37	37	37	37	37	37	37	37	37	37	37	37	37	37	37	37	37	33	37	37	29	37	34	38	37	30	34
			Exposed	37	37	37	37	37	37	37	37	37	37	37	37	37	37	37	37	37	37	37	37	34	37	37	29	37	33	37	37	29	32	34	38	28	30	34	25	41	30	22
		20-27	Interior	41*	41*	41*	41*	41*	41*	41*	41*	41*	41*	41*	41*	41*	41*	41*	41*	41*	41*	41*	41*	41*	41*	41*	41*	41*	41*	41*	41*	41*	41*	41*	41*	34	41*	37	30	40*	33	41
			Exposed	41*	41*	41*	41*	41*	41*	41*	41*	41*	41*	41*	41*	41*	41*	41*	41*	41*	41*	41*	41*	41*	41*	41*	35	41*	36	30	41*	31	39	41*	41	34	41*	36	30	37	32	27
		27-45	Interior	44*	44*	44*	44*	44*	44*	44*	44*	44*	44*	44*	44*	44*	44*	44*	44*	44*	44*	44*	44*	44*	44*	44*	44*	44*	44*	44*	44*	44*	44*	43*	43*	43*	42*	42*	37*	41*	41*	32
			Exposed	44*	44*	44*	44*	44*	44*	44*	44*	44*	44*	44*	44*	44*	44*	44*	44*	44*	44*	44*	44*	44*	44*	44*	44*	44*	44*	36*	44*	41*	31	40*	34	41	34	30	36	30	41	32
	D	0-7	Interior	39	39	39	39	39	39	39	39	39	39	39	39	39	39	39	39	39	39	39	39	39	39	39	39	39	39	36	39	39	31	39	39	41	39	33	36	39	30	32
			Exposed	39	39	39	39	39	39	39	39	39	39	39	39	39	39	39	39	39	35	39	39	32	39	39	41	39	33	35	39	43	31	34	38	27	30	33	24	40	29	21
		7-20	Interior	39	39	39	39	39	39	39	39	39	39	39	39	39	39	39	39	39	39	39	39	39	39	39	37	39	39	31	39	37	41	39	32	36	38	43	32	34	38	28
			Exposed	39	39	39	39	39	39	39	39	39	39	39	39	39	39	34	39	39	31	39	39	43	39	32	36	39	42	31	33	36	27	29	32	24	38	28	21	34	25	19
		20-27	Interior	46*	46*	46*	46*	46*	46*	46*	46*	46*	46*	46*	46*	46*	46*	46*	46*	46*	46*	46*	46*	46*	46*	46*	46*	46*	46*	40	45*	43*	33	44*	35	29	43*	31	38	43*	41	34
			Exposed	46*	46*	46*	46*	46*	46*	46*	46*	46*	46*	46*	46*	46*	46*	46*	46*	46*	39	46*	46*	34	46*	35	29	46*	30	38	45*	39	33	40	34	29	34	30	25	30	27	22
		27-45	Interior	48*	48*	48*	48*	48*	48*	48*	48*	48*	48*	48*	48*	48*	48*	48*	48*	48*	48*	47*	47*	47*	46*	46*	46*	45*	45*	45*	44*	44*	42*	43*	43*	35	42*	40*	30	40*	34	41
			Exposed	48*	48*	48*	48*	48*	48*	48*	48*	48*	48*	48*	48*	48*	48*	48*	48*	48*	48*	47*	47*	45*	46*	46*	35	45*	39*	30	37	33	39	32	43	34	42	38	30	38	34	27
100	B	0-7	Interior	35	35	35	35	35	35	35	35	35	35	35	35	35	35	35	35	35	35	35	35	35	35	35	35	35	35	35	35	35	35	35	35	35	35	35	35	35	35	35
			Exposed	35	35	35	35	35	35	35	35	35	35	35	35	35	35	35	35	35	35	35	35	35	35	35	35	35	35	35	35	35	35	35	35	31	35	35	41	35	34	36
		7-20	Interior	35	35	35	35	35	35	35	35	35	35	35	35	35	35	35	35	35	35	35	35	35	35	35	35	35	35	35	35	35	35	35	35	35	35	35	35	35	35	32
			Exposed	35	35	35	35	35	35	35	35	35	35	35	35	35	35	35	35	35	35	35	35	35	35	35	35	35	35	35	35	35	31	35	35	41	35	32	36	35	28	32
		20-27	Interior	39*	39*	39*	39*	39*	39*	39*	39*	39*	39*	39*	39*	39*	39*	39*	39*	39*	39*	39*	39*	39*	39*	39*	39*	39*	39*	39*	39*	39*	39*	39*	39*	39*	39*	39*	39*	39*	39*	39*
			Exposed	39*	39*	39*	39*	39*	39*	39*	39*	39*	39*	39*	39*	39*	39*	39*	39*	39*	39*	39*	39*	39*	39*	39*	39*	39*	39*	39*	39*	39*	39*	39*	39*	33	39*	35*	29	39*	31	39
		27-45	Interior	40*	40*	40*	40*	40*	40*	40*	40*	40*	40*	40*	40*	40*	40*	40*	40*	40*	40*	40*	40*	40*	40*	40*	40*	40*	40*	40*	40*	40*	40*	40*	40*	40*	40*	40*	40*	40*	40*	40*
			Exposed	40*	40*	40*	40*	40*	40*	40*	40*	40*	40*	40*	40*	40*	40*	40*	40*	40*	40*	40*	40*	40*	40*	40*	40*	40*	40*	40*	40*	40*	40*	40*	40*	40*	40*	40*	35*	40*	40*	31
	C	0-7	Interior	35	35	35	35	35	35	35	35	35	35	35	35	35	35	35	35	35	35	35	35	35	35	35	35	35	35	35	35	35	35	35	35	32	35	35	43	35	35	38
			Exposed	35	35	35	35	35	35	35	35	35	35	35	35	35	35	35	35	35	35	35	35	35	35	35	35	35	35	35	35	34	37	35	30	32	35	40	28	32	35	25
		7-20	Interior	35	35	35	35	35	35	35	35	35	35	35	35	35	35	35	35	35	35	35	35	35	35	35	35	35	35	35	35	35	33	35	35	29	35	34	38	35	30	34
			Exposed	35	35	35	35	35	35	35	35	35	35	35	35	35	35	35	35	35	35	35	35	34	35	35	29	35	33	37	35	29	32	34	38	28	30	34	25	41	30	22
		20-27	Interior	39*	39*	39*	39*	39*	39*	39*	39*	39*	39*	39*	39*	39*	39*	39*	39*	39*	39*	39*	39*	39*	39*	39*	39*	39*	39*	39*	39*	39*	39*	39*	39*	34*	39*	37*	30	39*	33	41
			Exposed	39*	39*	39*	39*	39*	39*	39*	39*	39*	39*	39*	39*	39*	39*	39*	39*	39*	39*	39*	39*	39*	39*	39*	35*	39*	36*	30	39*	31	39	39*	41	34	39*	36	30	37*	32	27
		27-45	Interior	40*	40*	40*	40*	40*	40*	40*	40*	40*	40*	40*	40*	40*	40*	40*	40*	40*	40*	40*	40*	40*	40*	40*	40*	40*	40*	40*	40*	40*	40*	40*	40*	40*	40*	40*	37*	40*	40*	33*
			Exposed	40*	40*	40*	40*	40*	40*	40*	40*	40*	40*	40*	40*	40*	40*	40*	40*	40*	40*	40*	40*	40*	40*	40*	40*	40*	40*	36*	40*	40*	31	40*	34*	41	34*	30	36	30	41	32
	D	0-7	Interior	37	37	37	37	37	37	37	37	37	37	37	37	37	37	37	37	37	37	37	37	37	37	37	37	37	37	36	37	37	31	37	37	41	37	33	36	37	30	32
			Exposed	37	37	37	37	37	37	37	37	37	37	37	37	37	37	37	37	37	35	37	37	32	37	37	41	37	33	35	37	43	31	34	38	27	30	33	24	40	29	21
		7-20	Interior	37	37	37	37	37	37	37	37	37	37	37	37	37	37	37	37	37	37	37	37	37	37	37	37	37	37	31	37	37	41	37	32	36	37	43	32	34	38	28
			Exposed	37	37	37	37	37	37	37	37	37	37	37	37	37	37	34	37	37	31	37	37	43	37	32	36	37	42	31	33	36	27	29	32	24	38	28	21	34	25	19
		20-27	Interior	41*	41*	41*	41*	41*	41*	41*	41*	41*	41*	41*	41*	41*	41*	41*	41*	41*	41*	41*	41*	41*	41*	41*	41*	41*	41*	40*	41*	41*	33	41*	35	29	40*	31	38	41*	41	34
			Exposed	41*	41*	41*	41*	41*	41*	41*	41*	41*	41*	41*	41*	41*	41*	41*	41*	41*	39*	41*	41*	34	41*	35	29	41*	30	38	41*	39	33	40*	34	29	34	30	25	30	27	22
		27-45	Interior	44*	44*	44*	44*	44*	44*	44*	44*	44*	44*	44*	44*	44*	44*	44*	44*	44*	44*	44*	44*	44*	44*	44*	44*	44*	44*	44*	42*	42*	42*	41*	41*	35	40*	40*	30	39*	34	41
			Exposed	44*	44*	44*	44*	44*	44*	44*	44*	44*	44*	44*	44*	44*	44*	44*	44*	44*	44*	44*	44*	44*	44*	44*	35	44*	39*	30	37*	33	39	32	43	34	42	38	30	38	34	27

* Cells with an astrisks indicates that the L-foot must be oriented in the Y- direction as indicated in the image.

10 Highlighted cell indicate 3-rail system span. Contact Unirac Engineering Services for support.

~~10~~ Highlighted cell with strikethrough indicate 3-rail system span and module clamp allowable capacity exceeds with 3-rails. 4-Rail system required. Contact Unirac Engineering Services for support.

UNIRAC

ASCE 7-22	II	30 ft	Ss = 1.25	23 sq.ft	LANDSCAPE	CROSS-SLOPE	NXT	NXT COMBO	Stronghold BUTYL Rafter #14S
Design Standard	Risk Category	Roof Height	Seismic	Module Area	Orientation	Rail Direction	Rail Type	Clamp	Attachment

SPAN TABLES

Maximum Allowable Rail Spans for Rooftop Solar Panels Parallel to the Roof Surface (inches)

Ground Snow Load (psf)	Wind Exposure Category	Roof Tilt Angle (deg)	Panel Exposure	Basic Wind Speed (mph)																																										
				90			95			100			105			110			115			120			130			140			150			160			170			180		
				Roof Wind Zone																																										
				1	2	3	1	2	3	1	2	3	1	2	3	1	2	3	1	2	3	1	2	3	1	2	3	1	2	3	1	2	3	1	2	3	1	2	3	1	2	3
0	B	0-7	Interior	101	101	101	101	101	101	101	101	101	101	101	96	101	101	92	101	101	88	101	97	84	101	90	78	97	84	73	91	79	68	86	75	65	81	71	62	77	67	60
			Exposed	101	101	91	101	100	87	101	95	82	101	91	79	101	87	75	97	84	72	93	80	70	86	75	65	80	70	62	75	66	59	71	63	55	68	60	52	64	58	59
		7-20	Interior	102	102	102	102	102	102	102	102	98	102	102	93	102	102	88	102	98	84	102	94	81	102	86	74	94	80	69	87	74	65	81	70	62	76	66	60	72	63	57
			Exposed	102	102	88	102	97	83	102	92	79	102	87	75	98	83	72	93	79	69	89	76	66	82	70	62	76	65	59	71	62	55	66	60	52	63	56	59	61	53	56
		20-27	Interior	102	102	102	102	102	102	102	102	102	102	102	102	102	102	98	102	102	93	102	98	89	102	90	82	102	83	76	98	77	71	92	73	66	87	68	63	82	65	61
			Exposed	102	102	98	102	102	92	102	96	87	102	91	83	102	87	79	102	83	75	100	79	72	92	73	67	86	68	63	80	64	60	76	61	57	72	59	53	68	55	50
		27-45	Interior	103	103	103	103	103	103	103	103	103	103	103	103	103	103	103	103	103	100	103	103	96	103	98	88	99	91	82	92	85	77	86	80	72	80	75	68	76	71	65
			Exposed	103	103	103	103	103	99	103	103	94	103	99	89	103	94	85	99	90	82	94	86	78	86	80	72	80	75	68	74	70	64	70	66	61	66	63	59	63	61	55
	C	0-7	Interior	101	101	94	101	101	89	101	98	85	101	93	81	101	89	77	99	86	74	95	82	71	88	77	66	82	72	63	77	68	60	73	64	57	69	62	53	66	59	61
			Exposed	101	89	77	98	85	73	93	81	70	89	77	67	85	74	64	82	71	63	79	69	61	73	64	57	69	61	53	65	58	60	62	54	56	59	61	53	56	59	49
		7-20	Interior	102	102	91	102	100	86	102	94	81	102	90	77	101	85	74	96	81	71	92	78	68	84	72	63	78	67	60	73	63	57	68	61	53	65	58	60	62	55	58
			Exposed	101	85	74	95	80	70	89	76	66	85	73	64	81	70	62	77	67	60	74	64	58	68	61	54	64	58	60	61	54	57	59	60	53	55	58	49	52	55	44
		20-27	Interior	102	102	101	102	102	95	102	99	90	102	94	85	102	89	81	102	85	77	102	81	74	95	75	68	88	70	64	82	65	61	78	62	58	73	60	55	70	57	52
			Exposed	102	89	81	102	84	76	101	80	73	96	76	69	92	72	66	88	69	64	84	66	62	78	63	59	73	59	54	68	56	51	65	52	58	62	60	55	60	57	52
		27-45	Interior	103	103	103	103	103	102	103	103	97	103	101	92	103	97	88	102	92	84	97	89	80	89	82	74	82	77	69	76	72	65	72	68	62	67	64	60	64	62	57
			Exposed	103	97	87	100	91	83	95	87	79	90	83	75	85	79	72	81	76	69	78	73	66	72	68	62	67	64	59	63	61	56	61	58	52	58	55	59	55	52	57
	D	0-7	Interior	101	100	86	101	94	82	101	90	78	100	86	74	95	82	71	91	79	69	87	76	66	81	71	62	76	67	59	71	63	55	68	60	52	64	58	59	62	54	56
			Exposed	95	82	71	90	78	68	86	75	65	82	72	63	79	69	61	76	66	59	73	64	57	68	61	52	64	57	59	61	53	55	58	60	52	55	57	47	52	54	41
		7-20	Interior	102	96	83	102	91	78	102	86	74	96	82	71	91	78	68	87	75	65	83	72	63	77	66	60	71	63	56	67	60	52	63	56	59	61	53	56	58	60	53
			Exposed	91	78	68	86	74	64	82	70	62	78	67	60	74	64	58	71	62	56	68	61	53	64	57	60	60	53	56	57	60	52	53	56	47	50	53	41	58	49	37
		20-27	Interior	102	101	91	102	95	86	102	90	82	102	85	78	102	81	74	98	78	71	94	74	68	87	69	64	81	64	60	76	61	57	72	59	53	68	55	50	64	52	58
			Exposed	102	81	74	97	77	70	92	73	67	88	69	64	84	66	62	81	64	60	77	62	58	72	59	54	67	55	60	64	51	57	61	58	53	58	55	50	55	52	44
		27-45	Interior	103	103	98	103	103	93	103	97	88	102	93	84	97	89	80	92	85	77	88	82	74	81	76	68	75	71	64	70	66	61	66	63	59	63	61	55	60	58	52
			Exposed	96	88	80	91	84	76	86	80	72	82	76	69	78	73	66	74	70	64	71	68	62	66	63	59	62	60	55	60	57	51	56	53	58	53	60	55	60	58	52
10	B	0-7	Interior	95	95	95	95	95	95	95	95	95	95	95	95	95	95	92	95	95	88	95	95	84	95	90	78	95	84	73	91	79	68	86	75	65	81	71	62	77	67	60
			Exposed	95	95	91	95	95	87	95	95	82	95	91	79	95	87	75	95	84	72	93	80	70	86	75	65	80	70	62	75	66	59	71	63	55	68	60	52	64	58	59
		7-20	Interior	95	95	95	95	95	95	95	95	95	95	95	93	95	95	88	95	95	84	95	94	81	95	86	74	94	80	69	87	74	65	81	70	62	76	66	60	72	63	57
			Exposed	95	95	88	95	95	83	95	92	79	95	87	75	95	83	72	93	79	69	89	76	66	82	70	62	76	65	59	71	62	55	66	60	52	63	56	59	61	53	56
		20-27	Interior	99	99	99	99	99	99	99	99	99	99	99	99	99	99	98	99	99	93	99	98	89	99	90	82	99	83	76	98	77	71	92	73	66	87	68	63	82	65	61
			Exposed	99	99	98	99	99	92	99	96	87	99	91	83	99	87	79	99	83	75	99	79	72	92	73	67	86	68	63	80	64	60	76	61	57	72	59	53	68	55	50
		27-45	Interior	102	102	102	102	102	102	102	102	102	102	102	102	102	102	102	102	102	100	102	102	96	102	98	88	99	91	82	92	85	77	86	80	72	80	75	68	76	71	65
			Exposed	102	102	102	102	102	99	102	102	94	102	99	89	102	94	85	99	90	82	94	86	78	86	80	72	80	75	68	74	70	64	70	66	61	66	63	59	63	61	55
	C	0-7	Interior	95	95	94	95	95	89	95	95	85	95	93	81	95	89	77	95	86	74	95	82	71	88	77	66	82	72	63	77	68	60	73	64	57	69	62	53	66	59	61
			Exposed	95	89	77	95	85	73	93	81	70	89	77	67	85	74	64	82	71	63	79	69	61	73	64	57	69	61	53	65	58	60	62	54	56	59	61	53	56	59	49
		7-20	Interior	95	95	91	95	95	86	95	94	81	95	90	77	95	85	74	95	81	71	92	78	68	84	72	63	78	67	60	73	63	57	68	61	53	65	58	60	62	55	58
			Exposed	95	85	74	95	80	70	89	76	66	85	73	64	81	70	62	77	67	60	74	64	58	68	61	54	64	58	60	61	54	57	59	60	53	55	58	49	52	55	44
		20-27	Interior	99	99	99	99	99	95	99	99	90	99	94	85	99	89	81	99	85	77	99	81	74	95	75	68	88	70	64	82	65	61	78	62	58	73	60	55	70	57	52
			Exposed	99	89	81	99	84	76	99	80	73	96	76	69	92	72	66	88	69	64	84	66	62	78	63	59	73	59	54	68	56	51	65	52	58	62	60	55	60	57	52
		27-45	Interior	102	102	102	102	102	102	102	102	97	102	101	92	102	97	88	102	92	84	97	89	80	89	82	74	82	77	69	76	72	65	72	68	62	67	64	60	64	62	57
			Exposed	102	97	87	100	91	83	95	87	79	90	83	75	85	79	72	81	76	69	78	73	66	72	68	62	67	64	59	63	61	56	61	58	52	58	55	59	55	52	57
	D	0-7	Interior	95	95	86	95	94	82	95	90	78	95	86	74	95	82	71	91	79	69	87	76	66	81	71	62	76	67	59	71	63	55	68	60	52	64	58	59	62	54	56
			Exposed	95	82	71	90	78	68	86	75	65	82	72	63	79	69	61	76	66	59	73	64	57	68	61	52	64	57	59	61	53	55	58	60	52	55	57	47	52	54	41
		7-20	Interior	95	95	83	95	91	78	95	86	74	95	82	71	91	78	68	87	75	65	83	72	63	77	66	60	71	63	56	67	60	52	63	56	59	61	53	56	58	60	53
			Exposed	91	78	68	86	74	64	82	70	62	78	67	60	74	64	58	71	62	56	68	61	53	64	57	60	60	53	56	57	60	52	53	56	47	50	53	41	58	49	37
		20-27	Interior	100	100	91	100	95	86	100	90	82	100	85	78	100	81	74	98	78	71	94	74	68	87	69	64	81	64	60	76	61	57	72	59	53	68	55	50	64	52	58
			Exposed	100	81	74	97	77	70	92	73	67	88	69	64	84	66	62	81	64	60	77	62	58	72	59	54	67	55	60	64	51	57	61	58	53	58	55	50	55	52	44
		27-45	Interior	102	102	98	102	102	93	102	97	88	102	93	84	97	89	80	92	85	77	88	82	74	81	76	68	75	71	64	70	66	61	66	63	59	63	61	55	60	58	52
			Exposed	96	88	80	91	84	76	86	80	72	82	76	69	78	73	66	74	70	64	71	68	62	66	63	59	62	60	55	60	57	51	56	53	58	53	60	55	60	58	52
20	B	0-7	Interior	85	85	85	85	85	85	85	85	85	85	85	85	85	85	85	85	85	85	85	85	84	85	85	78	85	84	73	85	79	68	85	75	65	81	71	62	77	67	60
			Exposed	85	85	85	85	85	85	85	85	82	85	85	79	85	85	75	85	84	72	85	80	70	85	75	65	80	70	62	75	66	59	71	63	55	68	60	52	64	58	59
		7-20	Interior	85	85	85	85	85	85	85	85	85	85	85	85	85	85	85	85	85	84	85	85	81	85	85	74	85	80	69	85	74	65	81	70	62	76	66	60	72	63	57
			Exposed	85	85	85	85	85	83	85	85	79	85	85	75	85	83	72	85	79	69	85	76	66	82	70	62	76	65	59	71	62	55	66	60	52	63	56	59	61	53	56
		20-27	Interior	92	92	92	92	92	92	92	92	92	92	92	92	92	92	92	92	92	92	92	92	89	92	90	82	92	83	76	92	77	71	92	73	66	87	68	63	82	65	61
			Exposed	92	92	92	92	92	92	92	92	87	92	91	83	92	87	79	92	83	75	92	79	72	92	73	67	86	68	63	80	64	60	76	61	57	72	59	53	68	55	50
		27-45	Interior	95	95	95	95	95	95	95	95	95	95	95	95	95	95	95	95	95	95	95	95	95	95	95	88	95	91	82	92	85	77	86	80	72	80	75	68	76	71	65
			Exposed	95	95	95	95	95	95	95	95	94	95	95	89	95	94	85	95	90	82	94	86	78	86	80	72	80	75	68	74	70	64	70	66	61	66	63	59	63	61	55
	C	0-7	Interior	85	85	85	85	85	85	85	85	85	85	85	81	85	85	77	85	85	74	85	82	71	85	77	66	82	72	63	77	68	60	73	64	57	69	62	53	66	59	61
			Exposed	85	85	77	85	85	73	85	81	70	85	77	67	85	74	64	82	71	63	79	69	61	73	64	57	69	61	53	65	58	60	62	54	56	59	61	53	56	59	49
		7-20	Interior	85	85	85	85	85	85	85	85	81	85	85	77	85	85	74	85	81	71	85	78	68	84	72	63	78	67	60	73	63	57	68	61	53	65	58	60	62	55	58
			Exposed	85	85	74	85	80	70	85	76	66	85	73	64	81	70	62	77	67	60	74	64	58	68	61	54	64	58	60	61	54	57	59	60	53	55	58	49	52	55	44
		20-27	Interior	92	92	92	92	92	92	92	92	90	92	92	85	92	89	81	92	85	77	92	81	74	92	75	68	88	70	64	82	65	61	78	62	58	73	60	55	70	57	52
			Exposed	92	89	81	92	84	76	92	80	73	92	76	69	92	72	66	88	69	64	84	66	62	78	63	59	73	59	54	68	56	51	65	52	58	62	60	55	60	57	52
		27-45	Interior	95	95	95	95	95	95	95	95	95	95	95	92	95	95	88	95	92	84	95	89	80	89	82	74	82	77	69	76	72	65	72	68	62	67	64	60	64	62	57
			Exposed	95	95	87	95	91	83	95	87	79	90	83	75	85	79	72	81	76	69	78	73	66	72	68	62	67	64	59	63	61	56	61	58	52	58	55	59	55	52	57
	D	0-7	Interior	85	85	85	85	85	82	85	85	78	85	85	74	85	82	71	85	79	69	85	76	66	81	71	62	76	67	59	71	63	55	68	60	52	64	58	59	62	54	56
			Exposed	85	82	71	85	78	68	85	75	65	82	72	63	79	69	61	76	66	59	73	64	57	68	61	52	64	57	59	61	53	55	58	60	52	55	57	47	52	54	41
		7-20	Interior	85	85	83	85	85	78	85	85	74	85	82	71	85	78	68	85	75	65	83	72	63	77	66	60	71	63	56	67	60	52	63	56	59	61	53	56	58	60	53
			Exposed	85	78	68	85	74	64	82	70	62	78	67	60	74	64	58	71	62	56	68	61	53	64	57	60	60	53	56	57	60	52	53	56	47	50	53	41	58	49	37
		20-27	Interior	93	93	91	93	93	86	93	90	82	93	85	78	93	81	74	93	78	71	93	74	68	87	69	64	81	64	60	76	61	57	72	59	53	68	55	50	64	52	58
			Exposed	93	81	74	93	77	70	92	73	67	88	69	64	84	66	62	81	64	60	77	62	58	72	59	54	67	55	60	64	51	57	61	58	53	58	55	50	55	52	44
		27-45	Interior	96	96	96	96	96	93	96	96	88	96	93	84	96	89	80	92	85	77	88	82	74	81	76	68	75	71	64	70	66	61	66	63	59	63	61	55	60	58	52
			Exposed	96	88	80	91	84	76	86	80	72	82	76	69	78	73	66	74	70	64	71	68	62	66	63	59	62	60	55	60	57	51	56	53	58	53	60	55	60	58	52

* Cells with an astrisks indicates that the L-foot must be oriented in the Y- direction as indicated in the image.

10 Highlighted cell indicate 3-rail system span. Contact Unirac Engineering Services for support.

~~10~~ Highlighted cell with strikethrough indicate 3-rail system span and module clamp allowable capacity exceeds with 3-rails. 4-Rail system required. Contact Unirac Engineering Services for support.

UNIRAC

ASCE 7-22	II	30 ft	Ss = 1.25	23 sq.ft	LANDSCAPE	CROSS-SLOPE	NXT	NXT COMBO	Stronghold BUTYL Rafter #14S
Design Standard	Risk Category	Roof Height	Seismic	Module Area	Orientation	Rail Direction	Rail Type	Clamp	Attachment

SPAN TABLES

Maximum Allowable Rail Spans for Rooftop Solar Panels Parallel to the Roof Surface (inches)

Ground Snow Load (psf)	Wind Exposure Category	Roof Tilt Angle (deg)	Panel Exposure	Basic Wind Speed (mph)																																						
				90			95			100			105			110			115			120			130			140			150			160			170			180		
				Roof Wind Zone																																						
				1	2	3	1	2	3	1	2	3	1	2	3	1	2	3	1	2	3	1	2	3	1	2	3	1	2	3	1	2	3	1	2	3	1	2	3	1	2	3
30	B	0-7	Interior	76	76	76	76	76	76	76	76	76	76	76	76	76	76	76	76	76	76	76	76	76	76	76	76	76	76	73	76	76	68	76	75	65	76	71	62	76	67	60
			Exposed	76	76	76	76	76	76	76	76	76	76	76	76	76	76	75	76	76	72	76	76	70	76	75	65	76	70	62	75	66	59	71	63	55	68	60	52	64	58	59
		7-20	Interior	76	76	76	76	76	76	76	76	76	76	76	76	76	76	76	76	76	76	76	76	76	76	76	74	76	76	69	76	74	65	76	70	62	76	66	60	72	63	57
			Exposed	76	76	76	76	76	76	76	76	76	76	76	75	76	76	72	76	76	69	76	76	66	76	70	62	76	65	59	71	62	55	66	60	52	63	56	59	61	53	56
		20-27	Interior	86	86	86	86	86	86	86	86	86	86	86	86	86	86	86	86	86	86	86	86	86	86	86	82	86	83	76	86	77	71	86	73	66	86	68	63	82	65	61
			Exposed	86	86	86	86	86	86	86	86	86	86	86	83	86	86	79	86	83	75	86	79	72	86	73	67	86	68	63	80	64	60	76	61	57	72	59	53	68	55	50
		27-45	Interior	90	90	90	90	90	90	90	90	90	90	90	90	90	90	90	90	90	90	90	90	90	90	90	88	90	90	82	89	85	77	86	80	72	80	75	68	76	71	65
			Exposed	90	90	90	90	90	90	90	90	90	90	90	89	90	90	85	90	90	82	90	86	78	86	80	72	80	75	68	74	70	64	70	66	61	66	63	59	63	61	55
	C	0-7	Interior	76	76	76	76	76	76	76	76	76	76	76	76	76	76	76	76	76	74	76	76	71	76	76	66	76	72	63	76	68	60	73	64	57	69	62	53	66	59	61
			Exposed	76	76	76	76	76	73	76	76	70	76	76	67	76	74	64	76	71	63	76	69	61	73	64	57	69	61	53	65	58	60	62	54	56	59	61	53	56	59	49
		7-20	Interior	76	76	76	76	76	76	76	76	76	76	76	76	76	76	74	76	76	71	76	76	68	76	72	63	76	67	60	73	63	57	68	61	53	65	58	60	62	55	58
			Exposed	76	76	74	76	76	70	76	76	66	76	73	64	76	70	62	76	67	60	74	64	58	68	61	54	64	58	60	61	54	57	59	60	53	55	58	49	52	55	44
		20-27	Interior	86	86	86	86	86	86	86	86	86	86	86	85	86	86	81	86	85	77	86	81	74	86	75	68	86	70	64	82	65	61	78	62	58	73	60	55	70	57	52
			Exposed	86	86	81	86	84	76	86	80	73	86	76	69	86	72	66	86	69	64	84	66	62	78	63	59	73	59	54	68	56	51	65	52	58	62	60	55	60	57	52
		27-45	Interior	90	90	90	90	90	90	90	90	90	90	90	90	90	90	88	90	90	84	90	89	80	89	82	74	82	77	69	76	72	65	72	68	62	67	64	60	64	62	57
			Exposed	90	90	87	90	90	83	90	87	79	90	83	75	85	79	72	81	76	69	78	73	66	72	68	62	67	64	59	63	61	56	61	58	52	58	55	59	55	52	57
	D	0-7	Interior	76	76	76	76	76	76	76	76	76	76	76	74	76	76	71	76	76	69	76	76	66	76	71	62	76	67	59	71	63	55	68	60	52	64	58	59	62	54	56
			Exposed	76	76	71	76	76	68	76	75	65	76	72	63	76	69	61	76	66	59	73	64	57	68	61	52	64	57	59	61	53	55	58	60	52	55	57	47	52	54	41
		7-20	Interior	76	76	76	76	76	76	76	76	74	76	76	71	76	76	68	76	75	65	76	72	63	76	66	60	71	63	56	67	60	52	63	56	59	61	53	56	58	60	53
			Exposed	76	76	68	76	74	64	76	70	62	76	67	60	74	64	58	71	62	56	68	61	53	64	57	60	60	53	56	57	60	52	53	56	47	50	53	41	58	49	37
		20-27	Interior	88	88	88	88	88	86	88	88	82	88	85	78	88	81	74	88	78	71	88	74	68	87	69	64	81	64	60	76	61	57	72	59	53	68	55	50	64	52	58
			Exposed	88	81	74	88	77	70	88	73	67	88	69	64	84	66	62	81	64	60	77	62	58	72	59	54	67	55	60	64	51	57	61	58	53	58	55	50	55	52	44
		27-45	Interior	91	91	91	91	91	91	91	91	88	91	91	84	91	89	80	91	85	77	88	82	74	81	76	68	75	71	64	70	66	61	66	63	59	63	61	55	60	58	52
			Exposed	91	88	80	91	84	76	86	80	72	82	76	69	78	73	66	74	70	64	71	68	62	66	63	59	62	60	55	60	57	51	56	53	58	53	60	55	60	58	52
40	B	0-7	Interior	73	73	73	73	73	73	73	73	73	73	73	73	73	73	73	73	73	73	73	73	73	73	73	73	73	73	73	73	73	68	73	73	65	73	71	62	73	67	60
			Exposed	73	73	73	73	73	73	73	73	73	73	73	73	73	73	73	73	73	72	73	73	70	73	73	65	73	70	62	73	66	59	71	63	55	68	60	52	64	58	59
		7-20	Interior	74	74	74	74	74	74	74	74	74	74	74	74	74	74	74	74	74	74	74	74	74	74	74	74	74	74	69	74	74	65	74	70	62	74	66	60	72	63	57
			Exposed	74	74	74	74	74	74	74	74	74	74	74	74	74	74	72	74	74	69	74	74	66	74	70	62	74	65	59	71	62	55	66	60	52	63	56	59	61	53	56
		20-27	Interior	79	79	79	79	79	79	79	79	79	79	79	79	79	79	79	79	79	79	79	79	79	79	79	79	79	79	76	79	77	71	79	73	66	79	68	63	78	65	61
			Exposed	79	79	79	79	79	79	79	79	79	79	79	79	79	79	79	79	79	75	79	79	72	79	73	67	79	68	63	79	64	60	76	61	57	72	59	53	68	55	50
		27-45	Interior	85	85	85	85	85	85	85	85	85	85	85	85	85	85	85	85	85	85	85	85	85	85	85	85	85	85	82	84	84	77	81	80	72	79	75	68	76	71	65
			Exposed	85	85	85	85	85	85	85	85	85	85	85	85	85	85	85	85	85	82	85	85	78	85	80	72	80	75	68	74	70	64	70	66	61	66	63	59	63	61	55
	C	0-7	Interior	73	73	73	73	73	73	73	73	73	73	73	73	73	73	73	73	73	73	73	73	71	73	73	66	73	72	63	73	68	60	73	64	57	69	62	53	66	59	61
			Exposed	73	73	73	73	73	73	73	73	70	73	73	67	73	73	64	73	71	63	73	69	61	73	64	57	69	61	53	65	58	60	62	54	56	59	61	53	56	59	49
		7-20	Interior	74	74	74	74	74	74	74	74	74	74	74	74	74	74	74	74	74	71	74	74	68	74	72	63	74	67	60	72	63	57	68	61	53	65	58	60	62	55	58
			Exposed	74	74	74	74	74	70	74	74	66	74	73	64	74	70	62	74	67	60	74	64	58	68	61	54	64	58	60	61	54	57	59	60	53	55	58	49	52	55	44
		20-27	Interior	79	79	79	79	79	79	79	79	79	79	79	79	79	79	79	79	79	77	79	79	74	79	75	68	79	70	64	78	65	61	76	62	58	73	60	55	70	57	52
			Exposed	79	79	79	79	79	76	79	79	73	79	79	69	79	72	66	79	69	64	79	66	62	78	63	59	73	59	54	68	56	51	65	52	58	62	60	55	60	57	52
		27-45	Interior	85	85	85	85	85	85	85	85	85	85	85	85	85	85	85	85	85	84	85	85	80	83	82	74	80	77	69	76	72	65	72	68	62	67	64	60	64	62	57
			Exposed	85	85	85	85	85	83	85	85	79	85	83	75	85	79	72	81	76	69	78	73	66	72	68	62	67	64	59	63	61	56	61	58	52	58	55	59	55	52	57
	D	0-7	Interior	76	76	76	76	76	76	76	76	76	76	76	74	76	76	71	76	76	69	76	76	66	76	71	62	76	67	59	71	63	55	68	60	52	64	58	59	62	54	56
			Exposed	76	76	71	76	76	68	76	75	65	76	72	63	76	69	61	76	66	59	73	64	57	68	61	52	64	57	59	61	53	55	58	60	52	55	57	47	52	54	41
		7-20	Interior	76	76	76	76	76	76	76	76	74	76	76	71	76	76	68	76	75	65	76	72	63	76	66	60	71	63	56	67	60	52	63	56	59	61	53	56	58	60	53
			Exposed	76	76	68	76	74	64	76	70	62	76	67	60	74	64	58	71	62	56	68	61	53	64	57	60	60	53	56	57	60	52	53	56	47	50	53	41	58	49	37
		20-27	Interior	81	81	81	81	81	81	81	81	81	81	81	78	81	81	74	81	78	71	81	74	68	81	69	64	80	64	60	76	61	57	72	59	53	68	55	50	64	52	58
			Exposed	81	81	74	81	77	70	81	73	67	81	69	64	81	66	62	81	64	60	77	62	58	72	59	54	67	55	60	64	51	57	61	58	53	58	55	50	55	52	44
		27-45	Interior	87	87	87	87	87	87	87	87	87	87	87	84	87	87	80	87	85	77	85	82	74	81	76	68	75	71	64	70	66	61	66	63	59	63	61	55	60	58	52
			Exposed	87	87	80	87	84	76	86	80	72	82	76	69	78	73	66	74	70	64	71	68	62	66	63	59	62	60	55	60	57	51	56	53	58	53	60	55	60	58	52
50	B	0-7	Interior	68	68	68	68	68	68	68	68	68	68	68	68	68	68	68	68	68	68	68	68	68	68	68	68	68	68	68	68	68	68	68	68	65	68	68	62	68	67	60
			Exposed	68	68	68	68	68	68	68	68	68	68	68	68	68	68	68	68	68	68	68	68	68	68	68	65	68	68	62	68	66	59	68	63	55	68	60	52	64	58	59
		7-20	Interior	68	68	68	68	68	68	68	68	68	68	68	68	68	68	68	68	68	68	68	68	68	68	68	68	68	68	68	68	68	65	68	68	62	68	66	60	67	63	57
			Exposed	68	68	68	68	68	68	68	68	68	68	68	68	68	68	68	68	68	68	68	68	66	68	68	62	68	65	59	68	62	55	66	60	52	63	56	59	61	53	56
		20-27	Interior	74	74	74	74	74	74	74	74	74	74	74	74	74	74	74	74	74	74	74	74	74	74	74	74	74	74	74	74	74	71	74	73	66	74	68	63	72	65	61
			Exposed	74	74	74	74	74	74	74	74	74	74	74	74	74	74	74	74	74	74	74	74	72	74	73	67	74	68	63	74	64	60	74	61	57	72	59	53	68	55	50
		27-45	Interior	80	80	80	80	80	80	80	80	80	80	80	80	80	80	80	80	80	80	80	80	80	80	80	80	80	80	80	78	78	77	76	76	72	74	74	68	72	71	65
			Exposed	80	80	80	80	80	80	80	80	80	80	80	80	80	80	80	80	80	80	80	80	78	80	80	72	80	75	68	74	70	64	70	66	61	66	63	59	63	61	55
	C	0-7	Interior	68	68	68	68	68	68	68	68	68	68	68	68	68	68	68	68	68	68	68	68	68	68	68	66	68	68	63	68	68	60	68	64	57	68	62	53	66	59	61
			Exposed	68	68	68	68	68	68	68	68	68	68	68	67	68	68	64	68	68	63	68	68	61	68	64	57	68	61	53	65	58	60	62	54	56	59	61	53	56	59	49
		7-20	Interior	68	68	68	68	68	68	68	68	68	68	68	68	68	68	68	68	68	68	68	68	68	68	68	63	68	67	60	67	63	57	66	61	53	64	58	60	62	55	58
			Exposed	68	68	68	68	68	68	68	68	66	68	68	64	68	68	62	68	67	60	68	64	58	68	61	54	64	58	60	61	54	57	59	60	53	55	58	49	52	55	44
		20-27	Interior	74	74	74	74	74	74	74	74	74	74	74	74	74	74	74	74	74	74	74	74	74	74	74	68	74	70	64	73	65	61	71	62	58	69	60	55	68	57	52
			Exposed	74	74	74	74	74	74	74	74	73	74	74	69	74	72	66	74	69	64	74	66	62	74	63	59	73	59	54	68	56	51	65	52	58	62	60	55	60	57	52
		27-45	Interior	80	80	80	80	80	80	80	80	80	80	80	80	80	80	80	80	80	80	80	80	80	77	77	74	75	75	69	72	72	65	70	68	62	67	64	60	64	62	57
			Exposed	80	80	80	80	80	80	80	80	79	80	80	75	80	79	72	80	76	69	78	73	66	72	68	62	67	64	59	63	61	56	61	58	52	58	55	59	55	52	57
	D	0-7	Interior	70	70	70	70	70	70	70	70	70	70	70	70	70	70	70	70	70	69	70	70	66	70	70	62	70	67	59	70	63	55	68	60	52	64	58	59	62	54	56
			Exposed	70	70	70	70	70	68	70	70	65	70	70	63	70	69	61	70	66	59	70	64	57	68	61	52	64	57	59	61	53	55	58	60	52	55	57	47	52	54	41
		7-20	Interior	71	71	71	71	71	71	71	71	71	71	71	71	71	71	68	71	71	65	71	71	63	71	66	60	69	63	56	67	60	52	63	56	59	61	53	56	58	60	53
			Exposed	71	71	68	71	71	64	71	70	62	71	67	60	71	64	58	71	62	56	68	61	53	64	57	60	60	53	56	57	60	52	53	56	47	50	53	41	58	49	37
		20-27	Interior	76	76	76	76	76	76	76	76	76	76	76	76	76	76	74	76	76	71	76	74	68	76	69	64	75	64	60	73	61	57	71	59	53	68	55	50	64	52	58
			Exposed	76	76	74	76	76	70	76	73	67	76	69	64	76	66	62	76	64	60	76	62	58	72	59	54	67	55	60	64	51	57	61	58	53	58	55	50	55	52	44
		27-45	Interior	82	82	82	82	82	82	82	82	82	82	82	82	82	82	80	81	81	77	79	79	74	77	76	68	74	71	64	70	66	61	66	63	59	63	61	55	60	58	52
			Exposed	82	82	80	82	82	76	82	80	72	82	76	69	78	73	66	74	70	64	71	68	62	66	63	59	62	60	55	60	57	51	56	53	58	53	60	55	60	58	52

* Cells with an astrisks indicates that the L-foot must be oriented in the Y- direction as indicated in the image.

10 Highlighted cell indicate 3-rail system span. Contact Unirac Engineering Services for support.

~~10~~ Highlighted cell with strikethrough indicate 3-rail system span and module clamp allowable capacity exceeds with 3-rails. 4-Rail system required. Contact Unirac Engineering Services for support.

UNIRAC

ASCE 7-22	II	30 ft	Ss = 1.25	23 sq.ft	LANDSCAPE	CROSS-SLOPE	NXT	NXT COMBO	Stronghold BUTYL Rafter #14S
Design Standard	Risk Category	Roof Height	Seismic	Module Area	Orientation	Rail Direction	Rail Type	Clamp	Attachment

SPAN TABLES

Maximum Allowable Rail Spans for Rooftop Solar Panels Parallel to the Roof Surface (inches)

Ground Snow Load (psf)	Wind Exposure Category	Roof Tilt Angle (deg)	Panel Exposure	Basic Wind Speed (mph)																																						
				90			95			100			105			110			115			120			130			140			150			160			170			180		
				Roof Wind Zone																																						
				1	2	3	1	2	3	1	2	3	1	2	3	1	2	3	1	2	3	1	2	3	1	2	3	1	2	3	1	2	3	1	2	3	1	2	3	1	2	3
60	B	0-7	Interior	62	62	62	62	62	62	62	62	62	62	62	62	62	62	62	62	62	62	62	62	62	62	62	62	62	62	62	62	62	62	62	62	62	62	62	62	62	62	60
			Exposed	62	62	62	62	62	62	62	62	62	62	62	62	62	62	62	62	62	62	62	62	62	62	62	62	62	62	62	62	62	59	62	62	55	62	60	52	62	58	59
		7-20	Interior	63	63	63	63	63	63	63	63	63	63	63	63	63	63	63	63	63	63	63	63	63	63	63	63	63	63	63	63	63	63	63	63	62	63	63	60	63	63	57
			Exposed	63	63	63	63	63	63	63	63	63	63	63	63	63	63	63	63	63	63	63	63	63	63	63	62	63	63	59	63	62	55	63	60	52	63	56	59	61	53	56
		20-27	Interior	69	69	69	69	69	69	69	69	69	69	69	69	69	69	69	69	69	69	69	69	69	69	69	69	69	69	69	69	69	69	69	69	66	69	68	63	68	65	61
			Exposed	69	69	69	69	69	69	69	69	69	69	69	69	69	69	69	69	69	69	69	69	69	69	69	67	69	68	63	69	64	60	69	61	57	69	59	53	68	55	50
		27-45	Interior	75	75	75	75	75	75	75	75	75	75	75	75	75	75	75	75	75	75	75	75	75	75	75	75	75	75	75	74	74	74	72	72	72	70	70	68	68	68	65
			Exposed	75	75	75	75	75	75	75	75	75	75	75	75	75	75	75	75	75	75	75	75	75	75	75	72	75	75	68	74	70	64	70	66	61	66	63	59	63	61	55
	C	0-7	Interior	62	62	62	62	62	62	62	62	62	62	62	62	62	62	62	62	62	62	62	62	62	62	62	62	62	62	62	62	62	60	62	62	57	62	62	53	62	59	61
			Exposed	62	62	62	62	62	62	62	62	62	62	62	62	62	62	62	62	62	62	62	62	61	62	62	57	62	61	53	62	58	60	62	54	56	59	61	53	56	59	49
		7-20	Interior	63	63	63	63	63	63	63	63	63	63	63	63	63	63	63	63	63	63	63	63	63	63	63	63	63	63	60	63	63	57	62	61	53	61	58	60	60	55	58
			Exposed	63	63	63	63	63	63	63	63	63	63	63	63	63	62	63	63	60	63	63	58	63	61	54	63	58	60	61	54	57	59	60	53	55	58	49	52	55	44
		20-27	Interior	69	69	69	69	69	69	69	69	69	69	69	69	69	69	69	69	69	69	69	69	69	69	69	68	65	61	67	62	58	65	60	55	64	57	52
			Exposed	69	69	69	69	69	69	69	69	69	69	69	69	69	66	69	69	64	69	66	62	69	63	59	69	59	54	68	56	51	65	52	58	62	60	55	60	57	52
		27-45	Interior	75	75	75	75	75	75	75	75	75	75	75	75	75	75	75	75	75	75	75	75	75	73	73	73	71	71	69	69	69	65	66	66	62	64	64	60	63	62	57
			Exposed	75	75	75	75	75	75	75	75	75	75	75	75	75	72	75	75	69	75	73	66	72	68	62	67	64	59	63	61	56	61	58	52	58	55	59	55	52	57
	D	0-7	Interior	65	65	65	65	65	65	65	65	65	65	65	65	65	65	65	65	65	65	65	65	65	65	65	62	65	65	59	65	63	55	65	60	52	64	58	59	62	54	56
			Exposed	65	65	65	65	65	65	65	65	65	65	63	65	65	61	65	65	59	65	64	57	65	61	52	64	57	59	61	53	55	58	60	52	55	57	47	52	54	41
		7-20	Interior	66	66	66	66	66	66	66	66	66	66	66	66	66	66	66	66	65	66	66	63	66	66	60	65	63	56	64	60	52	62	56	59	61	53	56	58	60	53
			Exposed	66	66	66	66	66	64	66	66	62	66	66	60	66	64	58	66	62	56	66	61	53	64	57	60	60	53	56	57	60	52	53	56	47	50	53	41	58	49	37
		20-27	Interior	72	72	72	72	72	72	72	72	72	72	72	72	72	72	72	72	72	71	72	72	68	72	69	64	70	64	60	69	61	57	67	59	53	65	55	50	64	52	58
			Exposed	72	72	72	72	72	70	72	72	67	72	69	64	72	66	62	72	64	60	72	62	58	72	59	54	67	55	60	64	51	57	61	58	53	58	55	50	55	52	44
		27-45	Interior	78	78	78	78	78	78	78	78	78	78	78	78	77	77	77	76	76	76	75	75	74	73	73	68	70	70	64	68	66	61	65	63	59	63	61	55	60	58	52
			Exposed	78	78	78	78	78	76	78	78	72	78	76	69	77	73	66	74	70	64	71	68	62	66	63	59	62	60	55	60	57	51	56	53	58	53	60	55	60	58	52
70	B	0-7	Interior	58	58	58	58	58	58	58	58	58	58	58	58	58	58	58	58	58	58	58	58	58	58	58	58	58	58	58	58	58	58	58	58	58	58	58	58	58	58	58
			Exposed	58	58	58	58	58	58	58	58	58	58	58	58	58	58	58	58	58	58	58	58	58	58	58	58	58	58	58	58	58	58	58	58	55	58	58	52	58	58	59
		7-20	Interior	58	58	58	58	58	58	58	58	58	58	58	58	58	58	58	58	58	58	58	58	58	58	58	58	58	58	58	58	58	58	58	58	58	58	58	58	58	58	57
			Exposed	58	58	58	58	58	58	58	58	58	58	58	58	58	58	58	58	58	58	58	58	58	58	58	58	58	58	58	58	58	55	58	58	52	58	56	59	58	53	56
		20-27	Interior	65	65	65	65	65	65	65	65	65	65	65	65	65	65	65	65	65	65	65	65	65	65	65	65	65	65	65	65	65	65	65	65	65	65	65	63	64	64	61
			Exposed	65	65	65	65	65	65	65	65	65	65	65	65	65	65	65	65	65	65	65	65	65	65	65	65	65	65	63	65	64	60	65	61	57	65	59	53	64	55	50
		27-45	Interior	72	72	72	72	72	72	72	72	72	72	72	72	72	72	72	72	72	72	72	72	72	72	72	72	71	71	71	70	70	70	68	68	68	67	67	67	65	65	65
			Exposed	72	72	72	72	72	72	72	72	72	72	72	72	72	72	72	72	72	72	72	72	72	72	72	72	71	71	68	70	70	64	68	66	61	66	63	59	63	61	55
	C	0-7	Interior	58	58	58	58	58	58	58	58	58	58	58	58	58	58	58	58	58	58	58	58	58	58	58	58	58	58	58	58	58	58	58	58	57	58	58	53	58	58	61
			Exposed	58	58	58	58	58	58	58	58	58	58	58	58	58	58	58	58	58	58	58	58	58	58	58	57	58	58	53	58	58	60	58	54	56	58	61	53	56	59	49
		7-20	Interior	58	58	58	58	58	58	58	58	58	58	58	58	58	58	58	58	58	58	58	58	58	58	58	58	58	58	58	58	58	57	58	58	53	58	58	60	57	55	58
			Exposed	58	58	58	58	58	58	58	58	58	58	58	58	58	58	58	58	58	58	58	58	58	58	58	54	58	58	60	58	54	57	58	60	53	55	58	49	52	55	44
		20-27	Interior	65	65	65	65	65	65	65	65	65	65	65	65	65	65	65	65	65	65	65	65	65	65	65	65	65	65	64	64	64	61	63	62	58	62	60	55	61	57	52
			Exposed	65	65	65	65	65	65	65	65	65	65	65	65	65	65	65	65	64	65	65	62	65	63	59	65	59	54	64	56	51	63	52	58	62	60	55	60	57	52
		27-45	Interior	72	72	72	72	72	72	72	72	72	72	72	72	72	72	72	72	72	72	71	71	71	69	69	69	67	67	67	65	65	65	64	64	62	62	62	60	61	61	57
			Exposed	72	72	72	72	72	72	72	72	72	72	72	72	72	72	72	72	72	69	71	71	66	69	68	62	67	64	59	63	61	56	61	58	52	58	55	59	55	52	57
	D	0-7	Interior	61	61	61	61	61	61	61	61	61	61	61	61	61	61	61	61	61	61	61	61	61	61	61	61	61	61	59	61	61	55	61	60	52	61	58	59	61	54	56
			Exposed	61	61	61	61	61	61	61	61	61	61	61	61	61	61	61	61	61	59	61	61	57	61	61	52	61	57	59	61	53	55	58	60	52	55	57	47	52	54	41
		7-20	Interior	61	61	61	61	61	61	61	61	61	61	61	61	61	61	61	61	61	61	61	61	61	61	61	60	61	61	56	60	60	52	59	56	59	58	53	56	57	60	53
			Exposed	61	61	61	61	61	61	61	61	61	61	60	61	61	58	61	61	56	61	61	53	61	57	60	60	60	53	56	57	60	52	53	56	47	50	53	41	58	49	37
		20-27	Interior	68	68	68	68	68	68	68	68	68	68	68	68	68	68	68	68	68	68	68	68	68	68	68	64	66	64	60	65	61	57	64	59	53	62	55	50	61	52	58
			Exposed	68	68	68	68	68	68	68	68	67	68	68	64	68	66	62	68	64	60	68	62	58	68	59	54	66	55	60	64	51	57	61	58	53	58	55	50	55	52	44
		27-45	Interior	74	74	74	74	74	74	74	74	74	74	74	74	73	73	73	72	72	72	71	71	71	69	69	68	67	67	64	65	65	61	63	63	59	61	61	55	59	58	52
			Exposed	74	74	74	74	74	74	74	74	72	74	74	69	73	73	66	72	70	64	71	68	62	66	63	59	62	60	55	60	57	51	56	53	58	53	60	55	60	58	52
80	B	0-7	Interior	54	54	54	54	54	54	54	54	54	54	54	54	54	54	54	54	54	54	54	54	54	54	54	54	54	54	54	54	54	54	54	54	54	54	54	54	54	54	54
			Exposed	54	54	54	54	54	54	54	54	54	54	54	54	54	54	54	54	54	54	54	54	54	54	54	54	54	54	54	54	54	54	54	54	54	54	54	52	54	54	59
		7-20	Interior	55	55	55	55	55	55	55	55	55	55	55	55	55	55	55	55	55	55	55	55	55	55	55	55	55	55	55	55	55	55	55	55	55	55	55	55	55	55	55
			Exposed	55	55	55	55	55	55	55	55	55	55	55	55	55	55	55	55	55	55	55	55	55	55	55	55	55	55	55	55	55	55	55	55	52	55	55	59	55	53	56
		20-27	Interior	61	61	61	61	61	61	61	61	61	61	61	61	61	61	61	61	61	61	61	61	61	61	61	61	61	61	61	61	61	61	61	61	61	61	61	61	61	61	61
			Exposed	61	61	61	61	61	61	61	61	61	61	61	61	61	61	61	61	61	61	61	61	61	61	61	61	61	61	61	61	61	60	61	61	57	61	59	53	61	55	50
		27-45	Interior	82*	82*	82*	82*	82*	82*	82*	82*	82*	82*	82*	82*	82*	82*	82*	82*	82*	82*	82*	82*	82*	82*	82*	82*	82*	82*	82*	67	67	67	65	65	65	64	64	64	63	63	63
			Exposed	82*	82*	82*	82*	82*	82*	82*	82*	82*	82*	82*	82*	82*	82*	82*	82*	82*	82*	82*	82*	68	82*	68	68	68	68	68	67	67	64	65	65	61	64	63	59	63	61	55
	C	0-7	Interior	54	54	54	54	54	54	54	54	54	54	54	54	54	54	54	54	54	54	54	54	54	54	54	54	54	54	54	54	54	54	54	54	54	54	54	53	54	54	61
			Exposed	54	54	54	54	54	54	54	54	54	54	54	54	54	54	54	54	54	54	54	54	54	54	54	54	54	54	53	54	54	60	54	54	56	54	61	53	54	59	49
		7-20	Interior	55	55	55	55	55	55	55	55	55	55	55	55	55	55	55	55	55	55	55	55	55	55	55	55	55	55	55	55	55	55	55	55	53	55	55	60	54	54	58
			Exposed	55	55	55	55	55	55	55	55	55	55	55	55	55	55	55	55	55	55	55	55	55	55	55	54	55	55	60	55	54	57	55	60	53	55	58	49	52	55	44
		20-27	Interior	61	61	61	61	61	61	61	61	61	61	61	61	61	61	61	61	61	61	61	61	61	61	61	61	61	61	61	61	61	61	60	60	58	59	59	55	59	57	52
			Exposed	61	61	61	61	61	61	61	61	61	61	61	61	61	61	61	61	61	61	61	61	61	61	61	59	61	59	54	61	56	51	60	52	58	59	60	55	59	57	52
		27-45	Interior	82*	82*	82*	82*	82*	82*	82*	82*	82*	82*	82*	82*	82*	82*	82*	82*	82*	82*	82*	82*	67	66	66	66	64	64	64	63	63	63	61	61	61	60	60	60	59	59	57
			Exposed	82*	82*	82*	82*	82*	82*	82*	82*	68	82*	82*	68	82*	68	68	81*	68	68	67	67	66	66	66	62	64	64	59	63	61	56	61	58	52	58	55	59	55	52	57
	D	0-7	Interior	57	57	57	57	57	57	57	57	57	57	57	57	57	57	57	57	57	57	57	57	57	57	57	57	57	57	57	57	57	55	57	57	52	57	57	59	57	54	56
			Exposed	57	57	57	57	57	57	57	57	57	57	57	57	57	57	57	57	57	57	57	57	57	57	57	52	57	57	59	57	53	55	57	60	52	55	57	47	52	54	41
		7-20	Interior	58	58	58	58	58	58	58	58	58	58	58	58	58	58	58	58	58	58	58	58	58	58	58	58	58	58	56	58	58	52	57	56	59	56	53	56	55	60	53
			Exposed	58	58	58	58	58	58	58	58	58	58	58	58	58	58	58	58	58	56	58	58	53	58	57	60	58	53	56	57	60	52	53	56	47	50	53	41	58	49	37
		20-27	Interior	64	64	64	64	64	64	64	64	64	64	64	64	64	64	64	64	64	64	64	64	64	64	64	64	63	63	60	62	61	57	61	59	53	60	55	50	59	52	58
			Exposed	64	64	64	64	64	64	64	64	64	64	64	64	64	62	64	64	60	64	62	58	64	59	54	63	55	60	62	51	57	61	58	53	58	55	50	55	52	44
		27-45	Interior	71	71	71	71	71	71	71	71	71	71	71	71	70	70	70	69	69	69	68	68	68	66	66	66	64	64	64	63	63	61	61	61	59	59	59	55	58	58	52
			Exposed	71	71	71	71	71	71	71	71	71	71	71	69	70	70	66	69	69	64	68	68	62	66	63	59	62	60	55	60	57	51	56	53	58	53	60	55	60	58	52

* Cells with an astrisks indicates that the L-foot must be oriented in the Y- direction as indicated in the image.

10 Highlighted cell indicate 3-rail system span. Contact Unirac Engineering Services for support.

~~10~~ Highlighted cell with strikethrough indicate 3-rail system span and module clamp allowable capacity exceeds with 3-rails. 4-Rail system required. Contact Unirac Engineering Services for support.

UNIRAC

ASCE 7-22	II	30 ft	Ss = 1.25	23 sq.ft	LANDSCAPE	CROSS-SLOPE	NXT	NXT COMBO	Stronghold BUTYL Rafter #14S
Design Standard	Risk Category	Roof Height	Seismic	Module Area	Orientation	Rail Direction	Rail Type	Clamp	Attachment

SPAN TABLES

Maximum Allowable Rail Spans for Rooftop Solar Panels Parallel to the Roof Surface (inches)

Ground Snow Load (psf)	Wind Exposure Category	Roof Tilt Angle (deg)	Panel Exposure	Basic Wind Speed (mph)																																						
				90			95			100			105			110			115			120			130			140			150			160			170			180		
				Roof Wind Zone																																						
				1	2	3	1	2	3	1	2	3	1	2	3	1	2	3	1	2	3	1	2	3	1	2	3	1	2	3	1	2	3	1	2	3	1	2	3	1	2	3
90	B	0-7	Interior	51	51	51	51	51	51	51	51	51	51	51	51	51	51	51	51	51	51	51	51	51	51	51	51	51	51	51	51	51	51	51	51	51	51	51	51	51	51	51
			Exposed	51	51	51	51	51	51	51	51	51	51	51	51	51	51	51	51	51	51	51	51	51	51	51	51	51	51	51	51	51	51	51	51	51	51	51	51	51	51	59
		7-20	Interior	52	52	52	52	52	52	52	52	52	52	52	52	52	52	52	52	52	52	52	52	52	52	52	52	52	52	52	52	52	52	52	52	52	52	52	52	52	52	52
			Exposed	52	52	52	52	52	52	52	52	52	52	52	52	52	52	52	52	52	52	52	52	52	52	52	52	52	52	52	52	52	52	52	52	52	52	52	59	52	52	56
		20-27	Interior	58	58	58	58	58	58	58	58	58	58	58	58	58	58	58	58	58	58	58	58	58	58	58	58	58	58	58	58	58	58	58	58	58	58	58	58	58	58	58
			Exposed	58	58	58	58	58	58	58	58	58	58	58	58	58	58	58	58	58	58	58	58	58	58	58	58	58	58	58	58	58	57	58	58	53	58	55	50			
		27-45	Interior	69*	69*	69*	69*	69*	69*	69*	69*	69*	69*	69*	69*	69*	69*	69*	69*	69*	69*	69*	69*	69*	69*	69*	69*	72*	72*	72*	70*	70*	70*	72*	72*	72*	73*	73*	62	61	61	61
			Exposed	69*	69*	69*	69*	69*	69*	69*	69*	69*	69*	69*	69*	69*	69*	69*	69*	69*	69*	69*	69*	69*	69*	69*	69*	72*	72*	65	70*	70*	64	63	63	61	62	62	59	61	61	55
	C	0-7	Interior	51	51	51	51	51	51	51	51	51	51	51	51	51	51	51	51	51	51	51	51	51	51	51	51	51	51	51	51	51	51	51	51	51	51	51	51	51	51	61
			Exposed	51	51	51	51	51	51	51	51	51	51	51	51	51	51	51	51	51	51	51	51	51	51	51	51	51	51	51	51	51	60	51	51	56	51	61	53	51	59	49
		7-20	Interior	52	52	52	52	52	52	52	52	52	52	52	52	52	52	52	52	52	52	52	52	52	52	52	52	52	52	52	52	52	52	52	52	52	52	52	60	52	52	58
			Exposed	52	52	52	52	52	52	52	52	52	52	52	52	52	52	52	52	52	52	52	52	52	52	52	52	52	52	60	52	52	57	52	60	53	52	58	49	52	55	44
		20-27	Interior	58	58	58	58	58	58	58	58	58	58	58	58	58	58	58	58	58	58	58	58	58	58	58	58	58	58	58	58	58	58	58	58	58	57	57	55	56	56	52
			Exposed	58	58	58	58	58	58	58	58	58	58	58	58	58	58	58	58	58	58	58	58	58	58	58	58	58	58	54	58	56	51	58	52	58	57	60	55	56	57	52
		27-45	Interior	69*	69*	69*	69*	69*	69*	69*	69*	69*	69*	69*	69*	69*	69*	69*	69*	69*	69*	71*	71*	71*	73*	73*	73*	71*	71*	62	61	61	61	59	59	59	58	58	58	57	57	57
			Exposed	69*	69*	69*	69*	69*	69*	69*	69*	69*	69*	69*	69*	69*	69*	69*	69*	69*	69*	71*	71*	65	72*	63	62	62	62	59	61	61	56	59	58	52	58	55	59	55	52	57
	D	0-7	Interior	54	54	54	54	54	54	54	54	54	54	54	54	54	54	54	54	54	54	54	54	54	54	54	54	54	54	54	54	54	54	54	54	52	54	54	59	54	54	56
			Exposed	54	54	54	54	54	54	54	54	54	54	54	54	54	54	54	54	54	54	54	54	54	54	54	52	54	54	59	54	53	55	54	60	52	54	57	47	52	54	41
		7-20	Interior	54	54	54	54	54	54	54	54	54	54	54	54	54	54	54	54	54	54	54	54	54	54	54	54	54	54	54	54	54	52	54	54	59	54	53	56	53	60	53
			Exposed	54	54	54	54	54	54	54	54	54	54	54	54	54	54	54	54	54	54	54	54	53	54	54	60	54	53	56	54	60	52	53	56	47	50	53	41	58	49	37
		20-27	Interior	60	60	60	60	60	60	60	60	60	60	60	60	60	60	60	60	60	60	60	60	60	60	60	60	60	60	60	60	60	57	59	59	53	58	55	50	57	52	58
			Exposed	60	60	60	60	60	60	60	60	60	60	60	60	60	60	60	60	60	60	60	60	58	60	59	54	60	55	60	60	51	57	59	58	53	58	55	50	55	52	44
		27-45	Interior	78*	78*	78*	78*	78*	78*	78*	78*	78*	78*	78*	78*	78*	78*	78*	80*	80*	66	65	65	65	64	64	64	62	62	62	61	61	61	59	59	59	58	58	55	56	56	52
			Exposed	78*	78*	78*	78*	78*	68	78*	78*	68	78*	68	68	78*	67	66	66	66	64	65	65	62	64	63	59	62	60	55	60	57	51	56	53	58	53	60	55	60	58	52
100	B	0-7	Interior	49	49	49	49	49	49	49	49	49	49	49	49	49	49	49	49	49	49	49	49	49	49	49	49	49	49	49	49	49	49	49	49	49	49	49	49	49	49	49
			Exposed	49	49	49	49	49	49	49	49	49	49	49	49	49	49	49	49	49	49	49	49	49	49	49	49	49	49	49	49	49	49	49	49	49	49	49	49	49	49	59
		7-20	Interior	49	49	49	49	49	49	49	49	49	49	49	49	49	49	49	49	49	49	49	49	49	49	49	49	49	49	49	49	49	49	49	49	49	49	49	49	49	49	49
			Exposed	49	49	49	49	49	49	49	49	49	49	49	49	49	49	49	49	49	49	49	49	49	49	49	49	49	49	49	49	49	49	49	49	49	49	49	59	49	49	56
		20-27	Interior	55	55	55	55	55	55	55	55	55	55	55	55	55	55	55	55	55	55	55	55	55	55	55	55	55	55	55	55	55	55	55	55	55	55	55	55	55	55	55
			Exposed	55	55	55	55	55	55	55	55	55	55	55	55	55	55	55	55	55	55	55	55	55	55	55	55	55	55	55	55	55	55	55	55	55	55	55	53	55	55	50
		27-45	Interior	65*	65*	65*	65*	65*	65*	65*	65*	65*	65*	65*	65*	65*	65*	65*	65*	65*	65*	65*	65*	65*	65*	65*	65*	65*	65*	65*	64*	64*	64*	63*	63*	63*	65*	65*	65*	64*	64*	64*
			Exposed	65*	65*	65*	65*	65*	65*	65*	65*	65*	65*	65*	65*	65*	65*	65*	65*	65*	65*	65*	65*	65*	65*	65*	65*	65*	65*	65*	64*	64*	64*	63*	63*	61	65*	63*	59	63*	59	55
	C	0-7	Interior	49	49	49	49	49	49	49	49	49	49	49	49	49	49	49	49	49	49	49	49	49	49	49	49	49	49	49	49	49	49	49	49	49	49	49	49	49	49	60
			Exposed	49	49	49	49	49	49	49	49	49	49	49	49	49	49	49	49	49	49	49	49	49	49	49	49	49	49	49	49	49	60	49	49	56	49	60	53	49	59	49
		7-20	Interior	49	49	49	49	49	49	49	49	49	49	49	49	49	49	49	49	49	49	49	49	49	49	49	49	49	49	49	49	49	49	49	49	49	49	49	60	49	49	58
			Exposed	49	49	49	49	49	49	49	49	49	49	49	49	49	49	49	49	49	49	49	49	49	49	49	49	49	49	60	49	49	57	49	60	53	49	58	49	49	55	44
		20-27	Interior	55	55	55	55	55	55	55	55	55	55	55	55	55	55	55	55	55	55	55	55	55	55	55	55	55	55	55	55	55	55	55	55	55	55	55	55	54	54	52
			Exposed	55	55	55	55	55	55	55	55	55	55	55	55	55	55	55	55	55	55	55	55	55	55	55	55	55	55	54	55	55	51	55	52	58	55	60	55	54	57	52
		27-45	Interior	65*	65*	65*	65*	65*	65*	65*	65*	65*	65*	65*	65*	65*	65*	65*	65*	65*	65*	65*	65*	65*	64*	64*	64*	63*	63*	63*	64*	64*	64*	65*	65*	57	56	56	56	55	55	55
			Exposed	65*	65*	65*	65*	65*	65*	65*	65*	65*	65*	65*	65*	65*	65*	65*	65*	65*	65*	65*	65*	65*	64*	64*	61	63*	63*	59	63*	59	56	57	57	52	56	55	59	55	52	57
	D	0-7	Interior	51	51	51	51	51	51	51	51	51	51	51	51	51	51	51	51	51	51	51	51	51	51	51	51	51	51	51	51	51	51	51	51	51	51	51	59	51	51	56
			Exposed	51	51	51	51	51	51	51	51	51	51	51	51	51	51	51	51	51	51	51	51	51	51	51	51	51	51	59	51	51	55	51	60	52	51	57	47	51	54	41
		7-20	Interior	52	52	52	52	52	52	52	52	52	52	52	52	52	52	52	52	52	52	52	52	52	52	52	52	52	52	52	52	52	52	52	52	59	52	52	56	51	60	53
			Exposed	52	52	52	52	52	52	52	52	52	52	52	52	52	52	52	52	52	52	52	52	52	52	52	60	52	52	56	52	60	52	52	56	47	50	53	41	58	49	37
		20-27	Interior	58	58	58	58	58	58	58	58	58	58	58	58	58	58	58	58	58	58	58	58	58	58	58	58	58	58	58	58	58	57	57	57	53	56	55	50	55	52	58
			Exposed	58	58	58	58	58	58	58	58	58	58	58	58	58	58	58	58	58	58	58	58	58	58	58	54	58	55	60	58	51	57	57	58	53	56	55	50	55	52	44
		27-45	Interior	69*	69*	69*	69*	69*	69*	69*	69*	69*	69*	69*	69*	71*	71*	71*	70*	70*	70*	73*	73*	73*	74*	74*	62	60	60	60	59	59	59	57	57	57	56	56	55	55	55	52
			Exposed	69*	69*	69*	69*	69*	69*	69*	69*	69*	69*	69*	69*	71*	71*	65	70*	70*	64	71*	63	62	62	62	59	60	60	55	59	57	51	56	53	58	53	60	55	60	58	52

* Cells with an astrisks indicates that the L-foot must be oriented in the Y- direction as indicated in the image.

10 Highlighted cell indicate 3-rail system span. Contact Unirac Engineering Services for support.

~~10~~ Highlighted cell with strikethrough indicate 3-rail system span and module clamp allowable capacity exceeds with 3-rails. 4-Rail system required. Contact Unirac Engineering Services for support.

UNIRAC

ASCE 7-22	II	30 ft	Ss = 3.00	19 sq.ft	PORTRAIT	CROSS-SLOPE	NXT	NXT COMBO	Stronghold BUTYL Rafter #14S
Design Standard	Risk Category	Roof Height	Seismic	Module Area	Orientation	Rail Direction	Rail Type	Clamp	Attachment

SPAN TABLES

Maximum Allowable Rail Spans for Rooftop Solar Panels Parallel to the Roof Surface (inches)

Ground Snow Load (psf)	Wind Exposure Category	Roof Tilt Angle (deg)	Panel Exposure	Basic Wind Speed (mph)																																						
				90			95			100			105			110			115			120			130			140			150			160			170			180		
				Roof Wind Zone																																						
				1	2	3	1	2	3	1	2	3	1	2	3	1	2	3	1	2	3	1	2	3	1	2	3	1	2	3	1	2	3	1	2	3	1	2	3	1	2	3
0	B	0-7	Interior	86	86	86	86	86	86	86	86	83	86	86	80	86	86	77	86	84	74	86	81	71	86	76	67	81	71	63	76	67	60	72	64	56	69	61	51	66	58	44
			Exposed	86	86	77	86	83	73	86	80	70	86	76	67	83	74	65	80	71	63	78	69	61	73	64	56	68	61	51	65	57	42	62	53	37	59	47	32	55	40	43
		7-20	Interior	86	86	86	86	86	85	86	86	81	86	86	77	86	84	74	86	81	72	86	78	69	83	73	65	78	68	61	73	64	57	69	61	52	66	58	44	63	54	39
			Exposed	86	84	74	86	80	71	86	77	68	84	73	65	81	71	63	77	68	60	75	66	58	70	61	52	65	57	43	62	52	37	59	44	32	54	38	43	50	34	38
		20-27	Interior	87	87	87	87	87	87	87	87	87	87	87	84	87	87	81	87	84	78	87	81	75	87	75	70	86	71	66	81	67	62	77	63	59	73	60	54	70	57	50
			Exposed	87	87	80	87	83	77	87	79	73	87	76	70	87	73	68	86	70	65	83	68	63	77	63	59	73	60	54	69	55	46	65	51	39	62	42	34	59	37	31
		27-45	Interior	87	87	87	87	87	87	87	87	87	87	87	87	87	87	86	87	87	82	87	86	79	87	81	74	81	76	70	77	72	66	72	68	63	69	65	60	66	62	56
			Exposed	87	87	86	87	87	82	87	85	78	87	82	75	84	78	72	81	76	70	78	73	67	73	68	63	68	64	59	64	61	55	61	58	50	58	53	41	54	48	37
	C	0-7	Interior	86	86	78	86	85	75	86	81	72	86	78	69	85	75	66	82	72	64	79	70	62	74	66	58	70	62	53	66	59	45	63	54	39	60	50	34	57	43	30
			Exposed	85	75	66	81	72	63	78	69	61	75	66	59	72	64	55	70	62	52	67	60	48	63	55	39	60	49	33	55	41	44	51	36	38	43	31	34	38	42	30
		7-20	Interior	86	86	76	86	82	72	86	78	69	86	75	67	82	72	64	79	69	62	76	67	60	71	63	54	67	59	47	63	54	39	60	48	34	56	41	30	52	36	40
			Exposed	82	72	64	78	69	61	75	66	59	72	63	55	69	61	52	67	59	46	64	56	41	60	49	34	55	40	30	51	35	39	41	30	34	36	40	30	32	36	27
		20-27	Interior	87	87	82	87	85	79	87	81	75	87	78	72	87	75	69	87	72	67	85	69	64	79	65	60	74	61	55	70	57	51	67	52	41	63	45	36	61	39	32
			Exposed	87	75	69	87	71	66	83	68	63	80	65	61	77	63	58	74	61	55	71	59	52	67	53	42	63	44	36	60	37	31	55	33	41	51	44	36	44	39	32
		27-45	Interior	87	87	87	87	87	83	87	87	80	87	83	77	86	80	74	83	77	71	80	75	69	74	70	64	70	66	61	66	62	57	62	59	52	59	55	44	56	51	39
			Exposed	86	80	74	82	77	70	78	73	67	75	71	65	72	68	62	69	66	60	67	63	58	63	59	52	59	55	43	54	49	37	48	41	33	40	36	43	36	32	39
	D	0-7	Interior	86	83	73	86	79	70	86	76	67	82	73	64	79	70	62	76	68	60	74	65	57	69	61	52	65	58	42	62	53	37	59	47	32	55	40	43	51	36	38
			Exposed	79	70	62	76	67	59	73	64	56	70	62	52	67	60	48	65	57	42	63	54	38	59	47	33	54	39	42	48	34	37	41	30	32	36	40	28	32	35	25
		7-20	Interior	86	80	70	86	76	67	83	73	64	80	70	62	76	67	60	73	65	57	71	62	54	66	58	45	62	53	38	59	45	33	54	38	43	49	34	38	41	30	34
			Exposed	76	67	59	73	64	56	70	61	52	67	59	46	64	56	41	62	52	37	60	48	34	54	39	43	48	33	37	39	43	32	34	38	28	30	34	25	41	30	22
		20-27	Interior	87	83	76	87	79	73	87	75	70	87	72	67	85	69	64	81	67	62	79	64	60	73	60	55	69	56	47	65	51	39	62	42	34	59	37	30	55	33	41
			Exposed	84	69	64	81	66	61	77	63	59	74	61	55	71	59	52	69	55	46	66	52	41	62	42	35	59	36	30	54	31	39	48	41	34	41	36	30	36	32	27
		27-45	Interior	87	87	81	87	84	78	87	81	74	83	78	71	80	75	69	77	72	66	74	69	64	69	65	60	65	61	55	61	58	50	58	53	41	53	48	36	48	41	32
			Exposed	80	74	68	76	71	66	73	68	63	70	66	60	67	63	58	65	61	55	62	59	52	58	54	42	53	47	36	44	39	31	38	34	41	34	30	36	30	41	32
10	B	0-7	Interior	77	77	77	77	77	77	77	77	77	77	77	77	77	77	77	77	77	74	77	77	71	77	76	67	77	71	63	76	67	60	72	64	56	69	61	51	66	58	44
			Exposed	77	77	77	77	77	73	77	77	70	77	76	67	77	74	65	77	71	63	77	69	61	73	64	56	68	61	51	65	57	42	62	53	37	59	47	32	55	40	43
		7-20	Interior	78	78	78	78	78	78	78	78	78	78	78	77	78	78	74	78	78	72	78	78	69	78	73	65	78	68	61	73	64	57	69	61	52	66	58	44	63	54	39
			Exposed	78	78	74	78	78	71	78	77	68	78	73	65	78	71	63	77	68	60	75	66	58	70	61	52	65	57	43	62	52	37	59	44	32	54	38	43	50	34	38
		20-27	Interior	83	83	83	83	83	83	83	83	83	83	83	83	83	83	81	83	83	78	83	81	75	83	75	70	83	71	66	81	67	62	77	63	59	73	60	54	70	57	50
			Exposed	83	83	80	83	83	77	83	79	73	83	76	70	83	73	68	83	70	65	83	68	63	77	63	59	73	60	54	69	55	46	65	51	39	62	42	34	59	37	31
		27-45	Interior	86	86	86	86	86	86	86	86	86	86	86	86	86	86	86	86	86	82	86	86	79	86	81	74	81	76	70	77	72	66	72	68	63	69	65	60	66	62	56
			Exposed	86	86	86	86	86	82	86	85	78	86	82	75	84	78	72	81	76	70	78	73	67	73	68	63	68	64	59	64	61	55	61	58	50	58	53	41	54	48	37
	C	0-7	Interior	77	77	77	77	77	75	77	77	72	77	77	69	77	75	66	77	72	64	77	70	62	74	66	58	70	62	53	66	59	45	63	54	39	60	50	34	57	43	30
			Exposed	77	75	66	77	72	63	77	69	61	75	66	59	72	64	55	70	62	52	67	60	48	63	55	39	60	49	33	55	41	44	51	36	38	43	31	34	38	42	30
		7-20	Interior	78	78	76	78	78	72	78	78	69	78	75	67	78	72	64	78	69	62	76	67	60	71	63	54	67	59	47	63	54	39	60	48	34	56	41	30	52	36	40
			Exposed	78	72	64	78	69	61	75	66	59	72	63	55	69	61	52	67	59	46	64	56	41	60	49	34	55	40	30	51	35	39	41	30	34	36	40	30	32	36	27
		20-27	Interior	83	83	82	83	83	79	83	81	75	83	78	72	83	75	69	83	72	67	83	69	64	79	65	60	74	61	55	70	57	51	67	52	41	63	45	36	61	39	32
			Exposed	83	75	69	83	71	66	83	68	63	80	65	61	77	63	58	74	61	55	71	59	52	67	53	42	63	44	36	60	37	31	55	33	41	51	44	36	44	39	32
		27-45	Interior	86	86	86	86	86	83	86	86	80	86	83	77	86	80	74	83	77	71	80	75	69	74	70	64	70	66	61	66	62	57	62	59	52	59	55	44	56	51	39
			Exposed	86	80	74	82	77	70	78	73	67	75	71	65	72	68	62	69	66	60	67	63	58	63	59	52	59	55	43	54	49	37	48	41	33	40	36	43	36	32	39
	D	0-7	Interior	77	77	73	77	77	70	77	76	67	77	73	64	77	70	62	76	68	60	74	65	57	69	61	52	65	58	42	62	53	37	59	47	32	55	40	43	51	36	38
			Exposed	77	70	62	76	67	59	73	64	56	70	62	52	67	60	48	65	57	42	63	54	38	59	47	33	54	39	42	48	34	37	41	30	32	36	40	28	32	35	25
		7-20	Interior	78	78	70	78	76	67	78	73	64	78	70	62	76	67	60	73	65	57	71	62	54	66	58	45	62	53	38	59	45	33	54	38	43	49	34	38	41	30	34
			Exposed	76	67	59	73	64	56	70	61	52	67	59	46	64	56	41	62	52	37	60	48	34	54	39	43	48	33	37	39	43	32	34	38	28	30	34	25	41	30	22
		20-27	Interior	84	83	76	84	79	73	84	75	70	84	72	67	84	69	64	81	67	62	79	64	60	73	60	55	69	56	47	65	51	39	62	42	34	59	37	30	55	33	41
			Exposed	84	69	64	81	66	61	77	63	59	74	61	55	71	59	52	69	55	46	66	52	41	62	42	35	59	36	30	54	31	39	48	41	34	41	36	30	36	32	27
		27-45	Interior	87	87	81	87	84	78	87	81	74	83	78	71	80	75	69	77	72	66	74	69	64	69	65	60	65	61	55	61	58	50	58	53	41	53	48	36	48	41	32
			Exposed	80	74	68	76	71	66	73	68	63	70	66	60	67	63	58	65	61	55	62	59	52	58	54	42	53	47	36	44	39	31	38	34	41	34	30	36	30	41	32
20	B	0-7	Interior	67	67	67	67	67	67	67	67	67	67	67	67	67	67	67	67	67	67	67	67	67	67	67	67	67	67	63	67	67	60	67	64	56	67	61	51	66	58	44
			Exposed	67	67	67	67	67	67	67	67	67	67	67	67	67	67	65	67	67	63	67	67	61	67	64	56	67	61	51	65	57	42	62	53	37	59	47	32	55	40	43
		7-20	Interior	67	67	67	67	67	67	67	67	67	67	67	67	67	67	67	67	67	67	67	67	67	67	67	67	67	67	61	67	64	57	67	61	52	66	58	44	63	54	39
			Exposed	67	67	67	67	67	67	67	67	67	67	67	65	67	67	63	67	67	60	67	66	58	67	61	52	65	57	43	62	52	37	59	44	32	54	38	43	50	34	38
		20-27	Interior	74	74	74	74	74	74	74	74	74	74	74	74	74	74	74	74	74	74	74	74	74	74	74	70	74	71	66	74	67	62	74	63	59	73	60	54	70	57	50
			Exposed	74	74	74	74	74	74	74	74	73	74	74	70	74	73	68	74	70	65	74	68	63	74	63	59	73	60	54	69	55	46	65	51	39	62	42	34	59	37	31
		27-45	Interior	78	78	78	78	78	78	78	78	78	78	78	78	78	78	78	78	78	78	78	78	78	78	78	74	78	76	70	77	72	66	72	68	63	69	65	60	66	62	56
			Exposed	78	78	78	78	78	78	78	78	78	78	78	75	78	78	72	78	76	70	78	73	67	73	68	63	68	64	59	64	61	55	61	58	50	58	53	41	54	48	37
	C	0-7	Interior	67	67	67	67	67	67	67	67	67	67	67	67	67	67	66	67	67	64	67	67	62	67	66	58	67	62	53	66	59	45	63	54	39	60	50	34	57	43	30
			Exposed	67	67	66	67	67	63	67	67	61	67	66	59	67	64	55	67	62	52	67	60	48	63	55	39	60	49	33	55	41	44	51	36	38	43	31	34	38	42	30
		7-20	Interior	67	67	67	67	67	67	67	67	67	67	67	67	67	67	64	67	67	62	67	67	60	67	63	54	67	59	47	63	54	39	60	48	34	56	41	30	52	36	40
			Exposed	67	67	64	67	67	61	67	66	59	67	63	55	67	61	52	67	59	46	64	56	41	60	49	34	55	40	30	51	35	39	41	30	34	36	40	30	32	36	27
		20-27	Interior	74	74	74	74	74	74	74	74	74	74	74	72	74	74	69	74	72	67	74	69	64	74	65	60	74	61	55	70	57	51	67	52	41	63	45	36	61	39	32
			Exposed	74	74	69	74	71	66	74	68	63	74	65	61	74	63	58	74	61	55	71	59	52	67	53	42	63	44	36	60	37	31	55	33	41	51	44	36	44	39	32
		27-45	Interior	78	78	78	78	78	78	78	78	78	78	78	77	78	78	74	78	77	71	78	75	69	74	70	64	70	66	61	66	62	57	62	59	52	59	55	44	56	51	39
			Exposed	78	78	74	78	77	70	78	73	67	75	71	65	72	68	62	69	66	60	67	63	58	63	59	52	59	55	43	54	49	37	48	41	33	40	36	43	36	32	39
	D	0-7	Interior	67	67	67	67	67	67	67	67	67	67	67	64	67	67	62	67	67	60	67	65	57	67	61	52	65	58	42	62	53	37	59	47	32	55	40	43	51	36	38
			Exposed	67	67	62	67	67	59	67	64	56	67	62	52	67	60	48	65	57	42	63	54	38	59	47	33	54	39	42	48	34	37	41	30	32	36	40	28	32	35	25
		7-20	Interior	67	67	67	67	67	67	67	67	64	67	67	62	67	67	60	67	65	57	67	62	54	66	58	45	62	53	38	59	45	33	54	38	43	49	34	38	41	30	34
			Exposed	67	67	59	67	64	56	67	61	52	67	59	46	64	56	41	62	52	37	60	48	34	54	39	43	48	33	37	39	43	32	34	38	28	30	34	25	41	30	22
		20-27	Interior	75	75	75	75	75	73	75	75	70	75	72	67	75	69	64	75	67	62	75	64	60	73	60	55	69	56	47	65	51	39	62	42	34	59	37	30	55	33	41
			Exposed	75	69	64	75	66	61	75	63	59	74	61	55	71	59	52	69	55	46	66	52	41	62	42	35	59	36	30	54	31	39	48	41	34	41	36	30	36	32	27
		27-45	Interior	79	79	79	79	79	78	79	79	74	79	78	71	79	75	69	77	72	66	74	69	64	69	65	60	65	61	55	61	58	50	58	53	41	53	48	36	48	41	32
			Exposed	79	74	68	76	71	66	73	68	63	70	66	60	67	63	58	65	61	55	62	59	52	58	54	42	53	47	36	44	39	31	38	34	41	34	30	36	30	41	32

* Cells with an astrisks indicates that the L-foot must be oriented in the Y- direction as indicated in the image.

10 Highlighted cell indicate 3-rail system span. Contact Unirac Engineering Services for support.

~~10~~ Highlighted cell with strikethrough indicate 3-rail system span and module clamp allowable capacity exceeds with 3-rails. 4-Rail system required. Contact Unirac Engineering Services for support.

UNIRAC

ASCE 7-22	II	30 ft	Ss = 3.00	19 sq.ft	PORTRAIT	CROSS-SLOPE	NXT	NXT COMBO	Stronghold BUTYL Rafter #14S
Design Standard	Risk Category	Roof Height	Seismic	Module Area	Orientation	Rail Direction	Rail Type	Clamp	Attachment

SPAN TABLES

Maximum Allowable Rail Spans for Rooftop Solar Panels Parallel to the Roof Surface (inches)

Ground Snow Load (psf)	Wind Exposure Category	Roof Tilt Angle (deg)	Panel Exposure	Basic Wind Speed (mph)																																												
				90			95			100			105			110			115			120			130			140			150			160			170			180		
				Roof Wind Zone																																												
				1	2	3	1	2	3	1	2	3	1	2	3	1	2	3	1	2	3	1	2	3	1	2	3	1	2	3	1	2	3	1	2	3	1	2	3	1	2	3
30	B	0-7	Interior	59	59	59	59	59	59	59	59	59	59	59	59	59	59	59	59	59	59	59	59	59	59	59	59	59	59	59	59	59	59	59	59	56	59	59	51	59	58	44
			Exposed	59	59	59	59	59	59	59	59	59	59	59	59	59	59	59	59	59	59	59	59	59	59	59	56	59	59	51	59	57	42	59	53	37	59	47	32	55	40	43
		7-20	Interior	60	60	60	60	60	60	60	60	60	60	60	60	60	60	60	60	60	60	60	60	60	60	60	60	60	60	60	60	60	57	60	60	52	60	58	44	59	54	39
			Exposed	60	60	60	60	60	60	60	60	60	60	60	60	60	60	60	60	60	60	60	60	58	60	60	52	60	57	43	60	52	37	59	44	32	54	38	43	50	34	38
		20-27	Interior	67	67	67	67	67	67	67	67	67	67	67	67	67	67	67	67	67	67	67	67	67	67	67	67	67	67	66	67	67	62	67	63	59	67	60	54	66	57	50
			Exposed	67	67	67	67	67	67	67	67	67	67	67	67	67	67	67	67	67	65	67	67	63	67	63	59	67	60	54	67	55	46	65	51	39	62	42	34	59	37	31
		27-45	Interior	71	71	71	71	71	71	71	71	71	71	71	71	71	71	71	71	71	71	71	71	71	71	71	71	71	71	70	70	70	66	68	68	63	66	65	60	64	62	56
			Exposed	71	71	71	71	71	71	71	71	71	71	71	71	71	71	71	71	71	70	71	71	67	71	68	63	68	64	59	64	61	55	61	58	50	58	53	41	54	48	37
	C	0-7	Interior	59	59	59	59	59	59	59	59	59	59	59	59	59	59	59	59	59	59	59	59	59	59	59	58	59	59	53	59	59	45	59	54	39	59	50	34	57	43	30
			Exposed	59	59	59	59	59	59	59	59	59	59	59	59	59	59	55	59	59	52	59	59	48	59	55	39	59	49	33	55	41	44	51	36	38	43	31	34	38	42	30
		7-20	Interior	60	60	60	60	60	60	60	60	60	60	60	60	60	60	60	60	60	60	60	60	60	60	60	54	60	59	47	59	54	39	58	48	34	56	41	30	52	36	40
			Exposed	60	60	60	60	60	60	60	60	59	60	60	55	60	60	52	60	59	46	60	56	41	60	49	34	55	40	30	51	35	39	41	30	34	36	40	30	32	36	27
		20-27	Interior	67	67	67	67	67	67	67	67	67	67	67	67	67	67	67	67	67	67	67	67	64	67	65	60	67	61	55	67	57	51	65	52	41	63	45	36	61	39	32
			Exposed	67	67	67	67	67	66	67	67	63	67	65	61	67	63	58	67	61	55	67	59	52	67	53	42	63	44	36	60	37	31	55	33	41	51	44	36	44	39	32
		27-45	Interior	71	71	71	71	71	71	71	71	71	71	71	71	71	71	71	71	71	71	71	71	69	69	69	64	67	66	61	64	62	57	62	59	52	59	55	44	56	51	39
			Exposed	71	71	71	71	71	70	71	71	67	71	71	65	71	68	62	69	66	60	67	63	58	63	59	52	59	55	43	54	49	37	48	41	33	40	36	43	36	32	39
	D	0-7	Interior	59	59	59	59	59	59	59	59	59	59	59	59	59	59	59	59	59	59	59	59	57	59	59	52	59	58	42	59	53	37	59	47	32	55	40	43	51	36	38
			Exposed	59	59	59	59	59	59	59	59	56	59	59	52	59	59	48	59	57	42	59	54	38	59	47	33	54	39	42	48	34	37	41	30	32	36	40	28	32	35	25
		7-20	Interior	60	60	60	60	60	60	60	60	60	60	60	60	60	60	60	60	60	57	60	60	54	60	58	45	59	53	38	57	45	33	54	38	43	49	34	38	41	30	34
			Exposed	60	60	59	60	60	56	60	60	52	60	59	46	60	56	41	60	52	37	60	48	34	54	39	43	48	33	37	39	43	32	34	38	28	30	34	25	41	30	22
		20-27	Interior	69	69	69	69	69	69	69	69	69	69	69	67	69	69	64	69	67	62	69	64	60	69	60	55	68	56	47	65	51	39	62	42	34	59	37	30	55	33	41
			Exposed	69	69	64	69	66	61	69	63	59	69	61	55	69	59	52	69	55	46	66	52	41	62	42	35	59	36	30	54	31	39	48	41	34	41	36	30	36	32	27
		27-45	Interior	73	73	73	73	73	73	73	73	73	73	73	71	73	73	69	72	72	66	71	69	64	68	65	60	65	61	55	61	58	50	58	53	41	53	48	36	48	41	32
			Exposed	73	73	68	73	71	66	73	68	63	70	66	60	67	63	58	65	61	55	62	59	52	58	54	42	53	47	36	44	39	31	38	34	41	34	30	36	30	41	32
40	B	0-7	Interior	57	57	57	57	57	57	57	57	57	57	57	57	57	57	57	57	57	57	57	57	57	57	57	57	57	57	57	57	57	57	57	57	56	57	57	51	57	57	44
			Exposed	57	57	57	57	57	57	57	57	57	57	57	57	57	57	57	57	57	57	57	57	57	57	57	56	57	57	51	57	57	42	57	53	37	57	47	32	55	40	43
		7-20	Interior	58	58	58	58	58	58	58	58	58	58	58	58	58	58	58	58	58	58	58	58	58	58	58	58	58	58	58	58	58	57	58	58	52	58	58	44	57	54	39
			Exposed	58	58	58	58	58	58	58	58	58	58	58	58	58	58	58	58	58	58	58	58	58	58	58	52	58	57	43	58	52	37	58	44	32	54	38	43	50	34	38
		20-27	Interior	62	62	62	62	62	62	62	62	62	62	62	62	62	62	62	62	62	62	62	62	62	62	62	62	62	62	62	62	62	62	62	62	59	62	60	54	61	57	50
			Exposed	62	62	62	62	62	62	62	62	62	62	62	62	62	62	62	62	62	62	62	62	62	62	62	59	62	60	54	62	55	46	62	51	39	62	42	34	59	37	31
		27-45	Interior	66	66	66	66	66	66	66	66	66	66	66	66	66	66	66	66	66	66	66	66	66	66	66	66	66	66	66	65	65	65	64	64	63	62	62	60	60	60	56
			Exposed	66	66	66	66	66	66	66	66	66	66	66	66	66	66	66	66	66	66	66	66	66	66	66	63	66	64	59	64	61	55	61	58	50	58	53	41	54	48	37
	C	0-7	Interior	57	57	57	57	57	57	57	57	57	57	57	57	57	57	57	57	57	57	57	57	57	57	57	57	57	57	53	57	57	45	57	54	39	57	50	34	57	43	30
			Exposed	57	57	57	57	57	57	57	57	57	57	57	57	57	57	55	57	57	52	57	57	48	57	55	39	57	49	33	55	41	44	51	36	38	43	31	34	38	42	30
		7-20	Interior	58	58	58	58	58	58	58	58	58	58	58	58	58	58	58	58	58	58	58	58	58	58	58	54	58	58	47	57	54	39	56	48	34	55	41	30	52	36	40
			Exposed	58	58	58	58	58	58	58	58	58	58	58	55	58	58	52	58	58	46	58	56	41	58	49	34	55	40	30	51	35	39	41	30	34	36	40	30	32	36	27
		20-27	Interior	62	62	62	62	62	62	62	62	62	62	62	62	62	62	62	62	62	62	62	62	62	62	62	60	62	61	55	61	57	51	60	52	41	58	45	36	57	39	32
			Exposed	62	62	62	62	62	62	62	62	62	62	62	61	62	62	58	62	61	55	62	59	52	62	53	42	62	44	36	60	37	31	55	33	41	51	44	36	44	39	32
		27-45	Interior	66	66	66	66	66	66	66	66	66	66	66	66	66	66	66	66	66	66	66	66	66	64	64	64	62	62	61	60	60	57	58	58	52	56	55	44	54	51	39
			Exposed	66	66	66	66	66	66	66	66	66	66	66	65	66	66	62	66	66	60	66	63	58	63	59	52	59	55	43	54	49	37	48	41	33	40	36	43	36	32	39
	D	0-7	Interior	59	59	59	59	59	59	59	59	59	59	59	59	59	59	59	59	59	59	59	59	57	59	59	52	59	58	42	59	53	37	59	47	32	55	40	43	51	36	38
			Exposed	59	59	59	59	59	59	59	59	56	59	59	52	59	59	48	59	57	42	59	54	38	59	47	33	54	39	42	48	34	37	41	30	32	36	40	28	32	35	25
		7-20	Interior	60	60	60	60	60	60	60	60	60	60	60	60	60	60	60	60	60	57	60	60	54	60	58	45	59	53	38	57	45	33	54	38	43	49	34	38	41	30	34
			Exposed	60	60	59	60	60	56	60	60	52	60	59	46	60	56	41	60	52	37	60	48	34	54	39	43	48	33	37	39	43	32	34	38	28	30	34	25	41	30	22
		20-27	Interior	64	64	64	64	64	64	64	64	64	64	64	64	64	64	64	64	64	62	64	64	60	64	60	55	63	56	47	61	51	39	60	42	34	58	37	30	55	33	41
			Exposed	64	64	64	64	64	61	64	63	59	64	61	55	64	59	52	64	55	46	64	52	41	62	42	35	59	36	30	54	31	39	48	41	34	41	36	30	36	32	27
		27-45	Interior	68	68	68	68	68	68	68	68	68	68	68	68	68	68	68	67	67	66	66	66	64	64	64	60	61	61	55	59	58	50	57	53	41	53	48	36	48	41	32
			Exposed	68	68	68	68	68	66	68	68	63	68	66	60	67	63	58	65	61	55	62	59	52	58	54	42	53	47	36	44	39	31	38	34	41	34	30	36	30	41	32
50	B	0-7	Interior	53	53	53	53	53	53	53	53	53	53	53	53	53	53	53	53	53	53	53	53	53	53	53	53	53	53	53	53	53	53	53	53	53	53	53	51	53	53	44
			Exposed	53	53	53	53	53	53	53	53	53	53	53	53	53	53	53	53	53	53	53	53	53	53	53	53	53	53	51	53	53	42	53	53	37	53	47	32	53	40	43
		7-20	Interior	53	53	53	53	53	53	53	53	53	53	53	53	53	53	53	53	53	53	53	53	53	53	53	53	53	53	53	53	53	53	53	53	52	53	53	44	53	53	39
			Exposed	53	53	53	53	53	53	53	53	53	53	53	53	53	53	53	53	53	53	53	53	53	53	53	52	53	53	43	53	52	37	53	44	32	53	38	43	50	34	38
		20-27	Interior	58	58	58	58	58	58	58	58	58	58	58	58	58	58	58	58	58	58	58	58	58	58	58	58	58	58	58	58	58	58	58	58	58	58	58	54	57	57	50
			Exposed	58	58	58	58	58	58	58	58	58	58	58	58	58	58	58	58	58	58	58	58	58	58	58	58	58	58	54	58	55	46	58	51	39	58	42	34	57	37	31
		27-45	Interior	62	62	62	62	62	62	62	62	62	62	62	62	62	62	62	62	62	62	62	62	62	62	62	62	62	62	62	61	61	61	60	60	60	58	58	58	57	57	56
			Exposed	62	62	62	62	62	62	62	62	62	62	62	62	62	62	62	62	62	62	62	62	62	62	62	62	62	62	59	61	61	55	60	58	50	58	53	41	54	48	37
	C	0-7	Interior	53	53	53	53	53	53	53	53	53	53	53	53	53	53	53	53	53	53	53	53	53	53	53	53	53	53	53	53	53	45	53	53	39	53	50	34	53	43	30
			Exposed	53	53	53	53	53	53	53	53	53	53	53	53	53	53	53	53	53	52	53	53	48	53	53	39	53	49	33	53	41	44	51	36	38	43	31	34	38	42	30
		7-20	Interior	53	53	53	53	53	53	53	53	53	53	53	53	53	53	53	53	53	53	53	53	53	53	53	53	53	53	47	53	53	39	52	48	34	51	41	30	50	36	40
			Exposed	53	53	53	53	53	53	53	53	53	53	53	53	53	53	52	53	53	46	53	53	41	53	49	34	53	40	30	51	35	39	41	30	34	36	40	30	32	36	27
		20-27	Interior	58	58	58	58	58	58	58	58	58	58	58	58	58	58	58	58	58	58	58	58	58	58	58	58	58	58	55	57	57	51	56	52	41	55	45	36	54	39	32
			Exposed	58	58	58	58	58	58	58	58	58	58	58	58	58	58	58	58	58	55	58	58	52	58	53	42	58	44	36	57	37	31	55	33	41	51	44	36	44	39	32
		27-45	Interior	62	62	62	62	62	62	62	62	62	62	62	62	62	62	62	62	62	62	62	62	62	60	60	60	59	59	59	57	57	57	55	55	52	53	53	44	52	51	39
			Exposed	62	62	62	62	62	62	62	62	62	62	62	62	62	62	62	62	62	60	62	62	58	60	59	52	59	55	43	54	49	37	48	41	33	40	36	43	36	32	39
	D	0-7	Interior	55	55	55	55	55	55	55	55	55	55	55	55	55	55	55	55	55	55	55	55	55	55	55	52	55	55	42	55	53	37	55	47	32	55	40	43	51	36	38
			Exposed	55	55	55	55	55	55	55	55	55	55	55	52	55	55	48	55	55	42	55	54	38	55	47	33	54	39	42	48	34	37	41	30	32	36	40	28	32	35	25
		7-20	Interior	55	55	55	55	55	55	55	55	55	55	55	55	55	55	55	55	55	55	55	55	54	55	55	45	54	53	38	53	45	33	52	38	43	49	34	38	41	30	34
			Exposed	55	55	55	55	55	55	55	55	52	55	55	46	55	55	41	55	52	37	55	48	34	54	39	43	48	33	37	39	43	32	34	38	28	30	34	25	41	30	22
		20-27	Interior	60	60	60	60	60	60	60	60	60	60	60	60	60	60	60	60	60	60	60	60	60	60	60	55	59	56	47	57	51	39	56	42	34	54	37	30	53	33	41
			Exposed	60	60	60	60	60	60	60	60	59	60	60	55	60	59	52	60	55	46	60	52	41	60	42	35	59	36	30	54	31	39	48	41	34	41	36	30	36	32	27
		27-45	Interior	64	64	64	64	64	64	64	64	64	64	64	64	64	64	64	63	63	63	62	62	62	60	60	60	58	58	55	56	56	50	54	53	41	52	48	36	48	41	32
			Exposed	64	64	64	64	64	64	64	64	63	64	64	60	64	63	58	63	61	55	62	59	52	58	54	42	53	47	36	44	39	31	38	34	41	34	30	36	30	41	32

* Cells with an astrisks indicates that the L-foot must be oriented in the Y- direction as indicated in the image.

10 Highlighted cell indicate 3-rail system span. Contact Unirac Engineering Services for support.

~~10~~ Highlighted cell with strikethrough indicate 3-rail system span and module clamp allowable capacity exceeds with 3-rails. 4-Rail system required. Contact Unirac Engineering Services for support.

UNIRAC

ASCE 7-22	II	30 ft	Ss = 3.00	19 sq.ft	PORTRAIT	CROSS-SLOPE	NXT	NXT COMBO	Stronghold BUTYL Rafter #14S
Design Standard	Risk Category	Roof Height	Seismic	Module Area	Orientation	Rail Direction	Rail Type	Clamp	Attachment

SPAN TABLES

Maximum Allowable Rail Spans for Rooftop Solar Panels Parallel to the Roof Surface (inches)

Ground Snow Load (psf)	Wind Exposure Category	Roof Tilt Angle (deg)	Panel Exposure	Basic Wind Speed (mph)																																						
				90			95			100			105			110			115			120			130			140			150			160			170			180		
				Roof Wind Zone																																						
				1	2	3	1	2	3	1	2	3	1	2	3	1	2	3	1	2	3	1	2	3	1	2	3	1	2	3	1	2	3	1	2	3	1	2	3	1	2	3
60	B	0-7	Interior	49	49	49	49	49	49	49	49	49	49	49	49	49	49	49	49	49	49	49	49	49	49	49	49	49	49	49	49	49	49	49	49	49	49	49	49	49	49	44
			Exposed	49	49	49	49	49	49	49	49	49	49	49	49	49	49	49	49	49	49	49	49	49	49	49	49	49	49	49	49	49	42	49	49	37	49	47	32	49	40	43
		7-20	Interior	49	49	49	49	49	49	49	49	49	49	49	49	49	49	49	49	49	49	49	49	49	49	49	49	49	49	49	49	49	49	49	49	49	49	49	44	49	49	39
			Exposed	49	49	49	49	49	49	49	49	49	49	49	49	49	49	49	49	49	49	49	49	49	49	49	49	49	49	43	49	49	37	49	44	32	49	38	43	49	34	38
		20-27	Interior	54	54	54	54	54	54	54	54	54	54	54	54	54	54	54	54	54	54	54	54	54	54	54	54	54	54	54	54	54	54	54	54	54	54	54	54	53	53	50
			Exposed	54	54	54	54	54	54	54	54	54	54	54	54	54	54	54	54	54	54	54	54	54	54	54	54	54	54	54	54	54	46	54	51	39	54	42	34	53	37	31
		27-45	Interior	64*	64*	64*	64*	64*	64*	64*	64*	64*	64*	64*	64*	64*	64*	64*	64*	64*	64*	64*	64*	64*	64*	64*	64*	64*	64*	64*	63*	63*	63*	64*	64*	63*	55	55	55	54	54	54
			Exposed	64*	64*	64*	64*	64*	64*	64*	64*	64*	64*	64*	64*	64*	64*	64*	64*	64*	64*	64*	64*	64*	64*	64*	63*	64*	64*	59	63*	58	55	57	57	50	55	53	41	54	48	37
	C	0-7	Interior	49	49	49	49	49	49	49	49	49	49	49	49	49	49	49	49	49	49	49	49	49	49	49	49	49	49	49	49	49	45	49	49	39	49	49	34	49	43	30
			Exposed	49	49	49	49	49	49	49	49	49	49	49	49	49	49	49	49	49	49	49	49	48	49	49	39	49	49	33	49	41	44	49	36	38	43	31	34	38	42	30
		7-20	Interior	49	49	49	49	49	49	49	49	49	49	49	49	49	49	49	49	49	49	49	49	49	49	49	49	49	49	47	49	49	39	49	48	34	48	41	30	47	36	40
			Exposed	49	49	49	49	49	49	49	49	49	49	49	49	49	49	49	49	49	46	49	49	41	49	49	34	49	40	30	49	35	39	41	30	34	36	40	30	32	36	27
		20-27	Interior	54	54	54	54	54	54	54	54	54	54	54	54	54	54	54	54	54	54	54	54	54	54	54	54	54	54	54	54	54	51	53	52	41	52	45	36	51	39	32
			Exposed	54	54	54	54	54	54	54	54	54	54	54	54	54	54	54	54	54	54	54	54	52	54	53	42	54	44	36	54	37	31	53	33	41	51	44	36	44	39	32
		27-45	Interior	64*	64*	64*	64*	64*	64*	64*	64*	64*	64*	64*	64*	64*	64*	64*	64*	64*	64*	64*	64*	64*	62*	62*	62*	65*	65*	56	54	54	54	53	53	52	51	51	44	50	50	39
			Exposed	64*	64*	64*	64*	64*	64*	64*	64*	64*	64*	64*	64*	64*	64*	63*	64*	64*	59	64*	63*	58	62*	57	52	56	55	43	54	49	37	48	41	33	40	36	43	36	32	39
	D	0-7	Interior	51	51	51	51	51	51	51	51	51	51	51	51	51	51	51	51	51	51	51	51	51	51	51	51	51	51	42	51	51	37	51	47	32	51	40	43	51	36	38
			Exposed	51	51	51	51	51	51	51	51	51	51	51	51	51	51	48	51	51	42	51	51	38	51	47	33	51	39	42	48	34	37	41	30	32	36	40	28	32	35	25
		7-20	Interior	52	52	52	52	52	52	52	52	52	52	52	52	52	52	52	52	52	52	52	52	52	52	52	45	51	51	38	50	45	33	49	38	43	48	34	38	41	30	34
			Exposed	52	52	52	52	52	52	52	52	52	52	52	46	52	52	41	52	52	37	52	48	34	52	39	43	48	33	37	39	43	32	34	38	28	30	34	25	41	30	22
		20-27	Interior	56	56	56	56	56	56	56	56	56	56	56	56	56	56	56	56	56	56	56	56	56	56	56	55	55	55	47	54	51	39	53	42	34	52	37	30	50	33	41
			Exposed	56	56	56	56	56	56	56	56	56	56	56	56	56	56	52	56	55	46	56	52	41	56	42	35	55	36	30	54	31	39	48	41	34	41	36	30	36	32	27
		27-45	Interior	69*	69*	69*	69*	69*	69*	69*	69*	69*	69*	69*	69*	69*	69*	69*	73*	60	60	59	59	59	57	57	57	55	55	55	54	54	50	52	52	41	50	48	36	48	41	32
			Exposed	69*	69*	69*	69*	69*	61	69*	61	61	69*	61	60	61	61	58	60	60	55	59	59	52	57	54	42	53	47	36	44	39	31	38	34	41	34	30	36	30	41	32
70	B	0-7	Interior	45	45	45	45	45	45	45	45	45	45	45	45	45	45	45	45	45	45	45	45	45	45	45	45	45	45	45	45	45	45	45	45	45	45	45	45	45	45	44
			Exposed	45	45	45	45	45	45	45	45	45	45	45	45	45	45	45	45	45	45	45	45	45	45	45	45	45	45	45	45	45	42	45	45	37	45	45	32	45	40	43
		7-20	Interior	46	46	46	46	46	46	46	46	46	46	46	46	46	46	46	46	46	46	46	46	46	46	46	46	46	46	46	46	46	46	46	46	46	46	46	44	46	46	39
			Exposed	46	46	46	46	46	46	46	46	46	46	46	46	46	46	46	46	46	46	46	46	46	46	46	46	46	46	43	46	46	37	46	44	32	46	38	43	46	34	38
		20-27	Interior	51	51	51	51	51	51	51	51	51	51	51	51	51	51	51	51	51	51	51	51	51	51	51	51	51	51	51	51	51	51	51	51	51	51	51	51	51	51	50
			Exposed	51	51	51	51	51	51	51	51	51	51	51	51	51	51	51	51	51	51	51	51	51	51	51	51	51	51	51	51	51	46	51	51	39	51	42	34	51	37	31
		27-45	Interior	56*	56*	56*	56*	56*	56*	56*	56*	56*	56*	56*	56*	56*	56*	56*	56*	56*	56*	56*	56*	56*	56*	56*	56*	56*	56*	56*	55*	55*	55*	54*	54*	54*	55*	55*	55*	54*	54*	54*
			Exposed	56*	56*	56*	56*	56*	56*	56*	56*	56*	56*	56*	56*	56*	56*	56*	56*	56*	56*	56*	56*	56*	56*	56*	56*	56*	56*	56*	55*	55*	55*	54*	54*	50	55*	54*	41	54*	48	37
	C	0-7	Interior	45	45	45	45	45	45	45	45	45	45	45	45	45	45	45	45	45	45	45	45	45	45	45	45	45	45	45	45	45	45	45	45	39	45	45	34	45	43	30
			Exposed	45	45	45	45	45	45	45	45	45	45	45	45	45	45	45	45	45	45	45	45	45	45	45	39	45	45	33	45	41	44	45	36	38	43	31	34	38	42	30
		7-20	Interior	46	46	46	46	46	46	46	46	46	46	46	46	46	46	46	46	46	46	46	46	46	46	46	46	46	46	46	46	46	39	46	46	34	45	41	30	45	36	40
			Exposed	46	46	46	46	46	46	46	46	46	46	46	46	46	46	46	46	46	46	46	46	41	46	46	34	46	40	30	46	35	39	41	30	34	36	40	30	32	36	27
		20-27	Interior	51	51	51	51	51	51	51	51	51	51	51	51	51	51	51	51	51	51	51	51	51	51	51	51	51	51	51	51	51	51	50	50	41	49	45	36	48	39	32
			Exposed	51	51	51	51	51	51	51	51	51	51	51	51	51	51	51	51	51	51	51	51	51	51	51	42	51	44	36	51	37	31	50	33	41	49	44	36	44	39	32
		27-45	Interior	56*	56*	56*	56*	56*	56*	56*	56*	56*	56*	56*	56*	56*	56*	56*	56*	56*	56*	56*	56*	56*	54*	54*	54*	55*	55*	55*	54*	54*	54*	54*	54*	50	56*	49	44	48	48	39
			Exposed	56*	56*	56*	56*	56*	56*	56*	56*	56*	56*	56*	56*	56*	56*	56*	56*	56*	56*	56*	56*	56*	54*	54*	52	55*	55*	43	54*	49	37	48	41	33	40	36	43	36	32	39
	D	0-7	Interior	48	48	48	48	48	48	48	48	48	48	48	48	48	48	48	48	48	48	48	48	48	48	48	48	48	48	42	48	48	37	48	47	32	48	40	43	48	36	38
			Exposed	48	48	48	48	48	48	48	48	48	48	48	48	48	48	48	48	48	42	48	48	38	48	47	33	48	39	42	48	34	37	41	30	32	36	40	28	32	35	25
		7-20	Interior	48	48	48	48	48	48	48	48	48	48	48	48	48	48	48	48	48	48	48	48	48	48	48	45	48	48	38	47	45	33	47	38	43	46	34	38	41	30	34
			Exposed	48	48	48	48	48	48	48	48	48	48	48	46	48	48	41	48	48	37	48	48	34	48	39	43	48	33	37	39	43	32	34	38	28	30	34	25	41	30	22
		20-27	Interior	53	53	53	53	53	53	53	53	53	53	53	53	53	53	53	53	53	53	53	53	53	53	53	53	52	52	47	51	51	39	50	42	34	49	37	30	48	33	41
			Exposed	53	53	53	53	53	53	53	53	53	53	53	53	53	53	52	53	53	46	53	52	41	53	42	35	52	36	30	51	31	39	48	41	34	41	36	30	36	32	27
		27-45	Interior	61*	61*	61*	61*	61*	61*	61*	61*	61*	61*	61*	61*	60*	60*	60*	59*	59*	59*	59*	59*	59*	59*	59*	59*	53	53	53	51	51	50	50	50	41	48	48	36	47	41	32
			Exposed	61*	61*	61*	61*	61*	61*	61*	61*	61*	61*	61*	60*	60*	60*	58	59*	59*	55	59*	59*	52	55	54	42	53	47	36	44	39	31	38	34	41	34	30	36	30	41	32
80	B	0-7	Interior	43	43	43	43	43	43	43	43	43	43	43	43	43	43	43	43	43	43	43	43	43	43	43	43	43	43	43	43	43	43	43	43	43	43	43	43	43	43	43
			Exposed	43	43	43	43	43	43	43	43	43	43	43	43	43	43	43	43	43	43	43	43	43	43	43	43	43	43	43	43	43	42	43	43	37	43	43	32	43	40	43
		7-20	Interior	43	43	43	43	43	43	43	43	43	43	43	43	43	43	43	43	43	43	43	43	43	43	43	43	43	43	43	43	43	43	43	43	43	43	43	43	43	43	39
			Exposed	43	43	43	43	43	43	43	43	43	43	43	43	43	43	43	43	43	43	43	43	43	43	43	43	43	43	43	43	43	37	43	43	32	43	38	43	43	34	38
		20-27	Interior	50*	50*	50*	50*	50*	50*	50*	50*	50*	50*	50*	50*	50*	50*	50*	50*	50*	50*	50*	50*	50*	50*	50*	50*	50*	50*	50*	50*	50*	50*	50*	50*	50*	50*	50*	50*	50*	50*	50*
			Exposed	50*	50*	50*	50*	50*	50*	50*	50*	50*	50*	50*	50*	50*	50*	50*	50*	50*	50*	50*	50*	50*	50*	50*	50*	50*	50*	50*	50*	50*	46	50*	50*	39	50*	42	34	50*	37	31
		27-45	Interior	53*	53*	53*	53*	53*	53*	53*	53*	53*	53*	53*	53*	53*	53*	53*	53*	53*	53*	53*	53*	53*	53*	53*	53*	53*	53*	53*	52*	52*	52*	51*	51*	51*	50*	50*	50*	49*	49*	49*
			Exposed	53*	53*	53*	53*	53*	53*	53*	53*	53*	53*	53*	53*	53*	53*	53*	53*	53*	53*	53*	53*	53*	53*	53*	53*	53*	53*	53*	52*	52*	52*	51*	51*	50*	50*	50*	41	49*	49*	37
	C	0-7	Interior	43	43	43	43	43	43	43	43	43	43	43	43	43	43	43	43	43	43	43	43	43	43	43	43	43	43	43	43	43	43	43	43	39	43	43	34	43	43	30
			Exposed	43	43	43	43	43	43	43	43	43	43	43	43	43	43	43	43	43	43	43	43	43	43	43	39	43	43	33	43	41	44	43	36	38	43	31	34	38	42	30
		7-20	Interior	43	43	43	43	43	43	43	43	43	43	43	43	43	43	43	43	43	43	43	43	43	43	43	43	43	43	43	43	43	39	43	43	34	43	41	30	42	36	40
			Exposed	43	43	43	43	43	43	43	43	43	43	43	43	43	43	43	43	43	43	43	43	41	43	43	34	43	40	30	43	35	39	41	30	34	36	40	30	32	36	27
		20-27	Interior	50*	50*	50*	50*	50*	50*	50*	50*	50*	50*	50*	50*	50*	50*	50*	50*	50*	50*	50*	50*	50*	50*	50*	50*	50*	50*	50*	50*	50*	50*	50*	50*	41	47	45	36	46	39	32
			Exposed	50*	50*	50*	50*	50*	50*	50*	50*	50*	50*	50*	50*	50*	50*	50*	50*	50*	50*	50*	50*	50*	50*	50*	42	50*	44	36	50*	37	31	50*	33	41	47	44	36	44	39	32
		27-45	Interior	53*	53*	53*	53*	53*	53*	53*	53*	53*	53*	53*	53*	53*	53*	53*	53*	53*	53*	53*	53*	53*	52*	52*	52*	51*	51*	51*	50*	50*	50*	48*	48*	48*	49*	49*	44	48*	48*	39
			Exposed	53*	53*	53*	53*	53*	53*	53*	53*	53*	53*	53*	53*	53*	53*	53*	53*	53*	53*	53*	53*	53*	52*	52*	52*	51*	51*	43	50*	49*	37	48*	41	33	40	36	43	36	32	39
	D	0-7	Interior	45	45	45	45	45	45	45	45	45	45	45	45	45	45	45	45	45	45	45	45	45	45	45	45	45	45	42	45	45	37	45	45	32	45	40	43	45	36	38
			Exposed	45	45	45	45	45	45	45	45	45	45	45	45	45	45	45	45	45	42	45	45	38	45	45	33	45	39	42	45	34	37	41	30	32	36	40	28	32	35	25
		7-20	Interior	45	45	45	45	45	45	45	45	45	45	45	45	45	45	45	45	45	45	45	45	45	45	45	45	45	45	38	45	45	33	44	38	43	44	34	38	41	30	34
			Exposed	45	45	45	45	45	45	45	45	45	45	45	45	45	45	41	45	45	37	45	45	34	45	39	43	45	33	37	39	43	32	34	38	28	30	34	25	41	30	22
		20-27	Interior	50	50	50	50	50	50	50	50	50	50	50	50	50	50	50	50	50	50	50	50	50	50	50	50	50	50	47	49	49	39	48	42	34	47	37	30	46	33	41
			Exposed	50	50	50	50	50	50	50	50	50	50	50	50	50	50	50	50	50	46	50	50	41	50	42	35	50	36	30	49	31	39	48	41	34	41	36	30	36	32	27
		27-45	Interior	55*	55*	55*	55*	55*	55*	55*	55*	55*	55*	55*	55*	55*	55*	55*	54*	54*	54*	54*	54*	54*	55*	55*	55*	53*	53*	53*	53*	53*	49	53*	53*	41	47	47	36	45	41	32
			Exposed	55*	55*	55*	55*	55*	55*	55*	55*	55*	55*	55*	55*	55*	55*	55*	54*	54*	54*	54*	54*	52*	55*	54*	42	53*	47	36	44	39	31	38	34	41	34	30	36	30	41	32

* Cells with an astrisks indicates that the L-foot must be oriented in the Y- direction as indicated in the image.

10 Highlighted cell indicate 3-rail system span. Contact Unirac Engineering Services for support.

~~10~~ Highlighted cell with strikethrough indicate 3-rail system span and module clamp allowable capacity exceeds with 3-rails. 4-Rail system required. Contact Unirac Engineering Services for support.

UNIRAC

ASCE 7-22	II	30 ft	Ss = 3.00	19 sq.ft	PORTRAIT	CROSS-SLOPE	NXT	NXT COMBO	Stronghold BUTYL Rafter #14S
Design Standard	Risk Category	Roof Height	Seismic	Module Area	Orientation	Rail Direction	Rail Type	Clamp	Attachment

SPAN TABLES

Maximum Allowable Rail Spans for Rooftop Solar Panels Parallel to the Roof Surface (inches)

Ground Snow Load (psf)	Wind Exposure Category	Roof Tilt Angle (deg)	Panel Exposure	Basic Wind Speed (mph)																																						
				90			95			100			105			110			115			120			130			140			150			160			170			180		
				Roof Wind Zone																																						
				1	2	3	1	2	3	1	2	3	1	2	3	1	2	3	1	2	3	1	2	3	1	2	3	1	2	3	1	2	3	1	2	3	1	2	3	1	2	3
90	B	0-7	Interior	40	40	40	40	40	40	40	40	40	40	40	40	40	40	40	40	40	40	40	40	40	40	40	40	40	40	40	40	40	40	40	40	40	40	40	40	40	40	40
			Exposed	40	40	40	40	40	40	40	40	40	40	40	40	40	40	40	40	40	40	40	40	40	40	40	40	40	40	40	40	40	40	40	40	37	40	40	32	40	40	43
		7-20	Interior	40	40	40	40	40	40	40	40	40	40	40	40	40	40	40	40	40	40	40	40	40	40	40	40	40	40	40	40	40	40	40	40	40	40	40	40	40	40	39
			Exposed	40	40	40	40	40	40	40	40	40	40	40	40	40	40	40	40	40	40	40	40	40	40	40	40	40	40	40	40	40	37	40	40	32	40	38	43	40	34	38
		20-27	Interior	48*	48*	48*	48*	48*	48*	48*	48*	48*	48*	48*	48*	48*	48*	48*	48*	48*	48*	48*	48*	48*	48*	48*	48*	48*	48*	48*	48*	48*	48*	48*	48*	48*	48*	48*	48*	48*	48*	48*
			Exposed	48*	48*	48*	48*	48*	48*	48*	48*	48*	48*	48*	48*	48*	48*	48*	48*	48*	48*	48*	48*	48*	48*	48*	48*	48*	48*	48*	48*	48*	46*	48*	48*	39	48*	42	34	48*	37	31
		27-45	Interior	51*	51*	51*	51*	51*	51*	51*	51*	51*	51*	51*	51*	51*	51*	51*	51*	51*	51*	51*	51*	51*	51*	51*	51*	51*	51*	51*	50*	50*	50*	49*	49*	49*	48*	48*	48*	48*	48*	48*
			Exposed	51*	51*	51*	51*	51*	51*	51*	51*	51*	51*	51*	51*	51*	51*	51*	51*	51*	51*	51*	51*	51*	51*	51*	51*	51*	51*	51*	50*	50*	50*	49*	49*	49*	48*	48*	41	48*	48*	37
	C	0-7	Interior	40	40	40	40	40	40	40	40	40	40	40	40	40	40	40	40	40	40	40	40	40	40	40	40	40	40	40	40	40	40	40	40	39	40	40	34	40	40	30
			Exposed	40	40	40	40	40	40	40	40	40	40	40	40	40	40	40	40	40	40	40	40	40	40	40	39	40	40	33	40	40	44	40	36	38	40	31	34	38	42	30
		7-20	Interior	40	40	40	40	40	40	40	40	40	40	40	40	40	40	40	40	40	40	40	40	40	40	40	40	40	40	40	40	40	39	40	40	34	40	40	30	40	36	40
			Exposed	40	40	40	40	40	40	40	40	40	40	40	40	40	40	40	40	40	40	40	40	40	40	40	34	40	40	30	40	35	39	40	30	34	36	40	30	32	36	27
		20-27	Interior	48*	48*	48*	48*	48*	48*	48*	48*	48*	48*	48*	48*	48*	48*	48*	48*	48*	48*	48*	48*	48*	48*	48*	48*	48*	48*	48*	48*	48*	48*	47*	47*	41	47*	45*	36	46*	39	32
			Exposed	48*	48*	48*	48*	48*	48*	48*	48*	48*	48*	48*	48*	48*	48*	48*	48*	48*	48*	48*	48*	48*	48*	48*	42	48*	44	36	48*	37	31	47*	33	41	47*	44	36	44	39	32
		27-45	Interior	51*	51*	51*	51*	51*	51*	51*	51*	51*	51*	51*	51*	51*	51*	51*	51*	51*	51*	51*	51*	51*	50*	50*	50*	49*	49*	49*	48*	48*	48*	47*	47*	47*	46*	46*	44*	44*	44*	39
			Exposed	51*	51*	51*	51*	51*	51*	51*	51*	51*	51*	51*	51*	51*	51*	51*	51*	51*	51*	51*	51*	51*	50*	50*	50*	49*	49*	43*	48*	48*	37	47*	41	33	40	36	43	36	32	39
	D	0-7	Interior	42	42	42	42	42	42	42	42	42	42	42	42	42	42	42	42	42	42	42	42	42	42	42	42	42	42	42	42	42	37	42	42	32	42	40	43	42	36	38
			Exposed	42	42	42	42	42	42	42	42	42	42	42	42	42	42	42	42	42	42	42	42	38	42	42	33	42	39	42	42	34	37	41	30	32	36	40	28	32	35	25
		7-20	Interior	43	43	43	43	43	43	43	43	43	43	43	43	43	43	43	43	43	43	43	43	43	43	43	43	43	43	38	43	43	33	43	38	43	42	34	38	41	30	34
			Exposed	43	43	43	43	43	43	43	43	43	43	43	43	43	43	41	43	43	37	43	43	34	43	39	43	43	33	37	39	43	32	34	38	28	30	34	25	41	30	22
		20-27	Interior	50*	50*	50*	50*	50*	50*	50*	50*	50*	50*	50*	50*	50*	50*	50*	50*	50*	50*	50*	50*	50*	50*	50*	50*	50*	50*	47	49*	49*	39	46	42	34	45	37	30	44	33	41
			Exposed	50*	50*	50*	50*	50*	50*	50*	50*	50*	50*	50*	50*	50*	50*	50*	50*	50*	46	50*	50*	41	50*	42	35	50*	36	30	49*	31	39	46	41	34	41	36	30	36	32	27
		27-45	Interior	53*	53*	53*	53*	53*	53*	53*	53*	53*	53*	53*	53*	53*	53*	53*	52*	52*	52*	52*	52*	52*	50*	50*	50*	49*	49*	49*	48*	48*	48*	48*	48*	41	47*	47*	36	47*	41	32
			Exposed	53*	53*	53*	53*	53*	53*	53*	53*	53*	53*	53*	53*	53*	53*	53*	52*	52*	52*	52*	52*	52*	50*	50*	42	49*	47*	36	44	39	31	38	34	41	34	30	36	30	41	32
100	B	0-7	Interior	38	38	38	38	38	38	38	38	38	38	38	38	38	38	38	38	38	38	38	38	38	38	38	38	38	38	38	38	38	38	38	38	38	38	38	38	38	38	38
			Exposed	38	38	38	38	38	38	38	38	38	38	38	38	38	38	38	38	38	38	38	38	38	38	38	38	38	38	38	38	38	37	38	38	32	38	38	43	38	38	43
		7-20	Interior	38	38	38	38	38	38	38	38	38	38	38	38	38	38	38	38	38	38	38	38	38	38	38	38	38	38	38	38	38	38	38	38	38	38	38	38	38	38	38
			Exposed	38	38	38	38	38	38	38	38	38	38	38	38	38	38	38	38	38	38	38	38	38	38	38	38	38	38	38	38	38	37	38	38	32	38	38	43	38	34	38
		20-27	Interior	43*	43*	43*	43*	43*	43*	43*	43*	43*	43*	43*	43*	43*	43*	43*	43*	43*	43*	43*	43*	43*	43*	43*	43*	43*	43*	43*	43*	43*	43*	43*	43*	43*	43*	43*	43*	43*	43*	43*
			Exposed	43*	43*	43*	43*	43*	43*	43*	43*	43*	43*	43*	43*	43*	43*	43*	43*	43*	43*	43*	43*	43*	43*	43*	43*	43*	43*	43*	43*	43*	43*	43*	43*	39	43*	42*	34	43*	37	31
		27-45	Interior	47*	47*	47*	47*	47*	47*	47*	47*	47*	47*	47*	47*	47*	47*	47*	47*	47*	47*	47*	47*	47*	47*	47*	47*	47*	47*	47*	47*	47*	47*	47*	47*	47*	47*	47*	47*	46*	46*	46*
			Exposed	47*	47*	47*	47*	47*	47*	47*	47*	47*	47*	47*	47*	47*	47*	47*	47*	47*	47*	47*	47*	47*	47*	47*	47*	47*	47*	47*	47*	47*	47*	47*	47*	47*	47*	47*	41*	46*	46*	37
	C	0-7	Interior	38	38	38	38	38	38	38	38	38	38	38	38	38	38	38	38	38	38	38	38	38	38	38	38	38	38	38	38	38	38	38	38	38	38	38	34	38	38	30
			Exposed	38	38	38	38	38	38	38	38	38	38	38	38	38	38	38	38	38	38	38	38	38	38	38	38	38	38	33	38	38	44	38	36	38	38	31	34	38	42	30
		7-20	Interior	38	38	38	38	38	38	38	38	38	38	38	38	38	38	38	38	38	38	38	38	38	38	38	38	38	38	38	38	38	38	38	38	34	38	38	30	38	36	40
			Exposed	38	38	38	38	38	38	38	38	38	38	38	38	38	38	38	38	38	38	38	38	38	38	38	34	38	38	30	38	35	39	38	30	34	36	40	30	32	36	27
		20-27	Interior	43*	43*	43*	43*	43*	43*	43*	43*	43*	43*	43*	43*	43*	43*	43*	43*	43*	43*	43*	43*	43*	43*	43*	43*	43*	43*	43*	43*	43*	43*	43*	43*	41*	43*	43*	36	44*	39	32
			Exposed	43*	43*	43*	43*	43*	43*	43*	43*	43*	43*	43*	43*	43*	43*	43*	43*	43*	43*	43*	43*	43*	43*	43*	42*	43*	43*	36	43*	37	31	43*	33	41	43*	44	36	44*	39	32
		27-45	Interior	47*	47*	47*	47*	47*	47*	47*	47*	47*	47*	47*	47*	47*	47*	47*	47*	47*	47*	47*	47*	47*	47*	47*	47*	47*	47*	47*	46*	46*	46*	45*	45*	45*	44*	44*	44*	43*	43*	39*
			Exposed	47*	47*	47*	47*	47*	47*	47*	47*	47*	47*	47*	47*	47*	47*	47*	47*	47*	47*	47*	47*	47*	47*	47*	47*	47*	47*	43*	46*	46*	37	45*	41*	33	40*	36	43	36	32	39
	D	0-7	Interior	40	40	40	40	40	40	40	40	40	40	40	40	40	40	40	40	40	40	40	40	40	40	40	40	40	40	40	40	40	37	40	40	32	40	40	43	40	36	38
			Exposed	40	40	40	40	40	40	40	40	40	40	40	40	40	40	40	40	40	40	40	40	38	40	40	33	40	39	42	40	34	37	40	30	32	36	40	28	32	35	25
		7-20	Interior	40	40	40	40	40	40	40	40	40	40	40	40	40	40	40	40	40	40	40	40	40	40	40	40	40	40	38	40	40	33	40	38	43	40	34	38	40	30	34
			Exposed	40	40	40	40	40	40	40	40	40	40	40	40	40	40	40	40	40	37	40	40	34	40	39	43	40	33	37	39	43	32	34	38	28	30	34	25	41	30	22
		20-27	Interior	48*	48*	48*	48*	48*	48*	48*	48*	48*	48*	48*	48*	48*	48*	48*	48*	48*	48*	48*	48*	48*	48*	48*	48*	48*	48*	47*	47*	47*	39	46*	42	34	46*	37	30	45*	33	41
			Exposed	48*	48*	48*	48*	48*	48*	48*	48*	48*	48*	48*	48*	48*	48*	48*	48*	48*	46*	48*	48*	41	48*	42	35	48*	36	30	47*	31	39	46*	41	34	41	36	30	36	32	27
		27-45	Interior	51*	51*	51*	51*	51*	51*	51*	51*	51*	51*	51*	51*	51*	51*	51*	50*	50*	50*	50*	50*	50*	49*	49*	49*	47*	47*	47*	46*	46*	46*	45*	45*	41	44*	44*	36	43*	41	32
			Exposed	51*	51*	51*	51*	51*	51*	51*	51*	51*	51*	51*	51*	51*	51*	51*	50*	50*	50*	50*	50*	50*	49*	49*	42	47*	47*	36	45*	39	31	38	34	41	34	30	36	30	41	32

*	Cells with an astrisks indicates that the L-foot must be oriented in the Y- direction as indicated in the image.
10	Highlighted cell indicate 3-rail system span. Contact Unirac Engineering Services for support.
~~10~~	Highlighted cell with strikethrough indicate 3-rail system span and module clamp allowable capacity exceeds with 3-rails. 4-Rail system required. Contact Unirac Engineering Services for support.

UNIRAC

ASCE 7-22	II	30 ft	Ss = 3.00	19 sq.ft	LANDSCAPE	CROSS-SLOPE	NXT	NXT COMBO	Stronghold BUTYL Rafter #14S
Design Standard	Risk Category	Roof Height	Seismic	Module Area	Orientation	Rail Direction	Rail Type	Clamp	Attachment

SPAN TABLES

Maximum Allowable Rail Spans for Rooftop Solar Panels Parallel to the Roof Surface (inches)

Ground Snow Load (psf)	Wind Exposure Category	Roof Tilt Angle (deg)	Panel Exposure	Basic Wind Speed (mph)																																								
				90			95			100			105			110			115			120			130			140			150			160			170			180		
				Roof Wind Zone																																								
				1	2	3	1	2	3	1	2	3	1	2	3	1	2	3	1	2	3	1	2	3	1	2	3	1	2	3	1	2	3	1	2	3	1	2	3	1	2	3
0	B	0-7	Interior	102	102	102	102	102	102	102	102	102	102	102	97	102	102	93	102	102	89	102	98	85	102	91	79	98	85	74	92	80	69	86	75	65	82	71	62	78	68	60
			Exposed	102	102	92	102	101	88	102	96	83	102	92	80	102	88	76	98	84	73	94	81	70	87	76	65	81	71	62	76	67	59	72	63	56	68	61	52	65	59	60
		7-20	Interior	102	102	102	102	102	102	102	102	99	102	102	94	102	102	89	102	99	85	102	95	82	102	87	75	95	81	70	88	75	65	82	71	63	77	67	60	73	64	57
			Exposed	102	102	89	102	98	84	102	93	80	102	88	76	99	84	73	94	80	70	90	77	67	83	71	63	77	66	60	71	63	56	67	60	52	64	57	60	61	54	57
		20-27	Interior	103	103	103	103	103	103	103	103	103	103	103	103	103	103	99	103	103	94	103	100	90	103	91	83	103	84	77	99	78	71	93	73	67	87	69	64	83	65	61
			Exposed	103	103	99	103	103	93	103	97	88	103	92	84	103	87	80	103	83	76	101	80	73	93	74	67	87	69	63	81	64	60	76	62	58	72	59	54	69	56	51
		27-45	Interior	103	103	103	103	103	103	103	103	103	103	103	103	103	103	103	103	103	102	103	103	97	103	99	89	100	92	83	93	86	77	87	80	73	81	76	69	77	72	65
			Exposed	103	103	103	103	103	100	103	103	95	103	100	90	103	95	86	100	91	82	95	87	79	87	81	73	81	75	68	75	71	64	70	67	61	66	64	59	63	61	56
	C	0-7	Interior	102	102	95	102	102	90	102	99	85	102	94	82	102	90	78	100	86	75	96	83	72	89	77	67	83	72	63	78	68	60	74	65	57	70	62	54	66	60	51
			Exposed	102	90	78	99	86	74	94	82	71	90	78	68	86	75	65	83	72	63	79	69	61	74	65	58	69	62	53	65	59	49	62	55	57	60	52	54	57	59	51
		7-20	Interior	102	102	92	102	101	87	102	95	82	102	90	78	102	86	75	97	82	71	93	79	68	85	73	64	79	68	61	73	64	58	69	61	54	65	59	51	63	55	59
			Exposed	102	86	74	96	81	71	90	77	67	86	74	64	82	70	62	78	67	60	75	65	59	69	61	54	65	58	50	62	54	57	59	51	54	56	58	50	52	55	45
		20-27	Interior	103	103	102	103	103	96	103	100	91	103	95	86	103	90	82	103	86	78	103	82	75	96	76	69	89	70	65	83	66	62	78	63	59	74	60	56	70	58	52
			Exposed	103	90	82	103	85	77	102	80	73	97	76	70	92	73	67	89	70	64	85	67	62	79	63	59	73	60	55	69	56	51	65	53	59	62	49	55	60	57	52
		27-45	Interior	103	103	103	103	103	103	103	103	98	103	102	93	103	98	88	103	93	85	98	90	81	90	83	75	83	77	70	77	73	66	72	68	63	68	65	60	65	62	57
			Exposed	103	97	88	101	92	84	96	88	79	91	84	76	86	80	73	82	77	70	79	74	67	73	69	63	68	64	60	64	61	56	61	59	53	59	55	60	55	52	57
	D	0-7	Interior	102	101	87	102	95	83	102	91	79	100	87	75	96	83	72	92	80	69	88	77	67	82	72	63	77	67	60	72	64	56	68	61	52	65	58	60	62	55	57
			Exposed	96	83	72	91	79	68	87	75	65	83	72	63	79	69	61	76	67	59	73	65	57	68	61	53	64	58	59	61	54	56	59	50	52	55	58	48	52	55	42
		7-20	Interior	102	97	84	102	92	79	102	87	75	97	83	72	92	79	68	88	75	66	84	72	64	78	67	60	72	63	57	67	60	53	64	57	60	61	54	57	59	51	54
			Exposed	92	79	68	87	74	65	82	71	63	78	68	61	75	65	59	72	63	56	69	61	54	64	57	60	61	53	56	58	60	52	54	57	48	51	53	42	59	50	37
		20-27	Interior	103	102	92	103	96	87	103	91	83	103	86	78	103	82	75	99	78	72	95	75	69	88	69	64	82	65	61	77	62	58	72	59	54	68	56	51	65	53	59
			Exposed	103	82	75	98	77	71	93	74	67	89	70	65	85	67	62	81	65	61	78	63	59	73	59	54	68	55	50	64	52	58	61	59	54	59	56	51	56	52	45
		27-45	Interior	103	103	100	103	103	94	103	98	89	103	94	85	98	90	81	93	86	78	89	82	74	82	76	69	76	71	65	71	67	62	66	64	59	63	61	56	61	59	52
			Exposed	98	89	81	92	85	77	87	81	73	83	77	70	79	74	67	75	71	64	72	68	63	67	64	59	63	61	55	60	58	51	57	54	59	54	51	56	50	59	52
10	B	0-7	Interior	95	95	95	95	95	95	95	95	95	95	95	95	95	95	93	95	95	89	95	95	85	95	91	79	95	85	74	92	80	69	86	75	65	82	71	62	78	68	60
			Exposed	95	95	92	95	95	88	95	95	83	95	92	80	95	88	76	95	84	73	94	81	70	87	76	65	81	71	62	76	67	59	72	63	56	68	61	52	65	59	60
		7-20	Interior	96	96	96	96	96	96	96	96	96	96	96	94	96	96	89	96	96	85	96	95	82	96	87	75	95	81	70	88	75	65	82	71	63	77	67	60	73	64	57
			Exposed	96	96	89	96	96	84	96	93	80	96	88	76	96	84	73	94	80	70	90	77	67	83	71	63	77	66	60	71	63	56	67	60	52	64	57	60	61	54	57
		20-27	Interior	100	100	100	100	100	100	100	100	100	100	100	100	100	100	99	100	100	94	100	100	90	100	91	83	100	84	77	99	78	71	93	73	67	87	69	64	83	65	61
			Exposed	100	100	99	100	100	93	100	97	88	100	92	84	100	87	80	100	83	76	100	80	73	93	74	67	87	69	63	81	64	60	76	62	58	72	59	54	69	56	51
		27-45	Interior	102	102	102	102	102	102	102	102	102	102	102	102	102	102	102	102	102	102	102	102	97	102	99	89	100	92	83	93	86	77	87	80	73	81	76	69	77	72	65
			Exposed	102	102	102	102	102	100	102	102	95	102	100	90	102	95	86	100	91	82	95	87	79	87	81	73	81	75	68	75	71	64	70	67	61	66	64	59	63	61	56
	C	0-7	Interior	95	95	95	95	95	90	95	95	85	95	94	82	95	90	78	95	86	75	95	83	72	89	77	67	83	72	63	78	68	60	74	65	57	70	62	54	66	60	51
			Exposed	95	90	78	95	86	74	94	82	71	90	78	68	86	75	65	83	72	63	79	69	61	74	65	58	69	62	53	65	59	49	62	55	57	60	52	54	57	59	51
		7-20	Interior	96	96	92	96	96	87	96	95	82	96	90	78	96	86	75	96	82	71	93	79	68	85	73	64	79	68	61	73	64	58	69	61	54	65	59	51	63	55	59
			Exposed	96	86	74	96	81	71	90	77	67	86	74	64	82	70	62	78	67	60	75	65	59	69	61	54	65	58	50	62	54	57	59	51	54	56	58	50	52	55	45
		20-27	Interior	100	100	100	100	100	96	100	100	91	100	95	86	100	90	82	100	86	78	100	82	75	96	76	69	89	70	65	83	66	62	78	63	59	74	60	56	70	58	52
			Exposed	100	90	82	100	85	77	100	80	73	97	76	70	92	73	67	89	70	64	85	67	62	79	63	59	73	60	55	69	56	51	65	53	59	62	49	55	60	57	52
		27-45	Interior	102	102	102	102	102	102	102	102	98	102	102	93	102	98	88	102	93	85	98	90	81	90	83	75	83	77	70	77	73	66	72	68	63	68	65	60	65	62	57
			Exposed	102	97	88	101	92	84	96	88	79	91	84	76	86	80	73	82	77	70	79	74	67	73	69	63	68	64	60	64	61	56	61	59	53	59	55	60	55	52	57
	D	0-7	Interior	95	95	87	95	95	83	95	91	79	95	87	75	95	83	72	92	80	69	88	77	67	82	72	63	77	67	60	72	64	56	68	61	52	65	58	60	62	55	57
			Exposed	95	83	72	91	79	68	87	75	65	83	72	63	79	69	61	76	67	59	73	65	57	68	61	53	64	58	59	61	54	56	59	50	52	55	58	48	52	55	42
		7-20	Interior	96	96	84	96	92	79	96	87	75	96	83	72	92	79	68	88	75	66	84	72	64	78	67	60	72	63	57	67	60	53	64	57	60	61	54	57	59	51	54
			Exposed	92	79	68	87	74	65	82	71	63	78	68	61	75	65	59	72	63	56	69	61	54	64	57	60	61	53	56	58	60	52	54	57	48	51	53	42	59	50	37
		20-27	Interior	101	101	92	101	96	87	101	91	83	101	86	78	101	82	75	99	78	72	95	75	69	88	69	64	82	65	61	77	62	58	72	59	54	68	56	51	65	53	59
			Exposed	101	82	75	98	77	71	93	74	67	89	70	65	85	67	62	81	65	61	78	63	59	73	59	54	68	55	50	64	52	58	61	59	54	59	56	51	56	52	45
		27-45	Interior	103	103	100	103	103	94	103	98	89	103	94	85	98	90	81	93	86	78	89	82	74	82	76	69	76	71	65	71	67	62	66	64	59	63	61	56	61	59	52
			Exposed	98	89	81	92	85	77	87	81	73	83	77	70	79	74	67	75	71	64	72	68	63	67	64	59	63	61	55	60	58	51	57	54	59	54	51	56	50	59	52
20	B	0-7	Interior	86	86	86	86	86	86	86	86	86	86	86	86	86	86	86	86	86	86	86	86	85	86	86	79	86	85	74	86	80	69	86	75	65	82	71	62	78	68	60
			Exposed	86	86	86	86	86	86	86	86	83	86	86	80	86	86	76	86	84	73	86	81	70	86	76	65	81	71	62	76	67	59	72	63	56	68	61	52	65	59	60
		7-20	Interior	86	86	86	86	86	86	86	86	86	86	86	86	86	86	86	86	86	85	86	86	82	86	86	75	86	81	70	86	75	65	82	71	63	77	67	60	73	64	57
			Exposed	86	86	86	86	86	84	86	86	80	86	86	76	86	84	73	86	80	70	86	77	67	83	71	63	77	66	60	71	63	56	67	60	52	64	57	60	61	54	57
		20-27	Interior	92	92	92	92	92	92	92	92	92	92	92	92	92	92	92	92	92	92	92	92	90	92	91	83	92	84	77	92	78	71	92	73	67	87	69	64	83	65	61
			Exposed	92	92	92	92	92	92	92	92	88	92	92	84	92	87	80	92	83	76	92	80	73	92	74	67	87	69	63	81	64	60	76	62	58	72	59	54	69	56	51
		27-45	Interior	96	96	96	96	96	96	96	96	96	96	96	96	96	96	96	96	96	96	96	96	96	96	96	89	96	92	83	93	86	77	87	80	73	81	76	69	77	72	65
			Exposed	96	96	96	96	96	96	96	96	95	96	96	90	96	95	86	96	91	82	95	87	79	87	81	73	81	75	68	75	71	64	70	67	61	66	64	59	63	61	56
	C	0-7	Interior	86	86	86	86	86	86	86	86	85	86	86	82	86	86	78	86	86	75	86	83	72	86	77	67	83	72	63	78	68	60	74	65	57	70	62	54	66	60	51
			Exposed	86	86	78	86	86	74	86	82	71	86	78	68	86	75	65	83	72	63	79	69	61	74	65	58	69	62	53	65	59	49	62	55	57	60	52	54	57	59	51
		7-20	Interior	86	86	86	86	86	86	86	86	82	86	86	78	86	86	75	86	82	71	86	79	68	85	73	64	79	68	61	73	64	58	69	61	54	65	59	51	63	55	59
			Exposed	86	86	74	86	81	71	86	77	67	86	74	64	82	70	62	78	67	60	75	65	59	69	61	54	65	58	50	62	54	57	59	51	54	56	58	50	52	55	45
		20-27	Interior	92	92	92	92	92	92	92	92	91	92	92	86	92	90	82	92	86	78	92	82	75	92	76	69	89	70	65	83	66	62	78	63	59	74	60	56	70	58	52
			Exposed	92	90	82	92	85	77	92	80	73	92	76	70	92	73	67	89	70	64	85	67	62	79	63	59	73	60	55	69	56	51	65	53	59	62	49	55	60	57	52
		27-45	Interior	96	96	96	96	96	96	96	96	96	96	96	96	96	96	96	96	96	96	96	96	81	90	83	75	83	77	70	77	73	66	72	68	63	68	65	60	65	62	57
			Exposed	96	96	88	96	92	84	96	88	79	91	84	76	86	80	73	82	77	70	79	74	67	73	69	63	68	64	60	64	61	56	61	59	53	59	55	60	55	52	57
	D	0-7	Interior	86	86	86	86	86	83	86	86	79	86	86	75	86	83	72	86	80	69	86	77	67	82	72	63	77	67	60	72	64	56	68	61	52	65	58	60	62	55	57
			Exposed	86	83	72	86	79	68	86	75	65	83	72	63	79	69	61	76	67	59	73	65	57	68	61	53	64	58	59	61	54	56	59	50	52	55	58	48	52	55	42
		7-20	Interior	86	86	84	86	86	79	86	86	75	86	83	72	86	79	68	86	75	66	84	72	64	78	67	60	72	63	57	67	60	53	64	57	60	61	54	57	59	51	54
			Exposed	86	79	68	86	74	65	82	71	63	78	68	61	75	65	59	72	63	56	69	61	54	64	57	60	61	53	56	58	60	52	54	57	48	51	53	42	59	50	37
		20-27	Interior	94	94	92	94	94	87	94	91	83	94	86	78	94	82	75	94	78	72	94	75	69	88	69	64	82	65	61	77	62	58	72	59	54	68	56	51	65	53	59
			Exposed	94	82	75	94	77	71	93	74	67	89	70	65	85	67	62	81	65	61	78	63	59	73	59	54	68	55	50	64	52	58	61	59	54	59	56	51	56	52	45
		27-45	Interior	97	97	97	97	97	94	97	97	89	97	94	85	97	90	81	93	86	78	89	82	74	82	76	69	76	71	65	71	67	62	66	64	59	63	61	56	61	59	52
			Exposed	97	89	81	92	85	77	87	81	73	83	77	70	79	74	67	75	71	64	72	68	63	67	64	59	63	61	55	60	58	51	57	54	59	54	51	56	50	59	52

* Cells with an astrisks indicates that the L-foot must be oriented in the Y- direction as indicated in the image.

10 Highlighted cell indicate 3-rail system span. Contact Unirac Engineering Services for support.

~~10~~ Highlighted cell with strikethrough indicate 3-rail system span and module clamp allowable capacity exceeds with 3-rails. 4-Rail system required. Contact Unirac Engineering Services for support.

UNIRAC

ASCE 7-22	II	30 ft	Ss = 3.00	19 sq.ft	LANDSCAPE	CROSS-SLOPE	NXT	NXT COMBO	Stronghold BUTYL Rafter #14S
Design Standard	Risk Category	Roof Height	Seismic	Module Area	Orientation	Rail Direction	Rail Type	Clamp	Attachment

SPAN TABLES

Maximum Allowable Rail Spans for Rooftop Solar Panels Parallel to the Roof Surface (inches)

Ground Snow Load (psf)	Wind Exposure Category	Roof Tilt Angle (deg)	Panel Exposure	Basic Wind Speed (mph)																																						
				90			95			100			105			110			115			120			130			140			150			160			170			180		
				Roof Wind Zone																																						
				1	2	3	1	2	3	1	2	3	1	2	3	1	2	3	1	2	3	1	2	3	1	2	3	1	2	3	1	2	3	1	2	3	1	2	3	1	2	3
30	B	0-7	Interior	77	77	77	77	77	77	77	77	77	77	77	77	77	77	77	77	77	77	77	77	77	77	77	77	77	77	74	77	77	69	77	75	65	77	71	62	77	68	60
			Exposed	77	77	77	77	77	77	77	77	77	77	77	77	77	77	76	77	77	73	77	77	70	77	76	65	77	71	62	76	67	59	72	63	56	68	61	52	65	59	60
		7-20	Interior	77	77	77	77	77	77	77	77	77	77	77	77	77	77	77	77	77	77	77	77	77	77	77	75	77	77	70	77	75	65	77	71	63	77	67	60	73	64	57
			Exposed	77	77	77	77	77	77	77	77	77	77	77	76	77	77	73	77	77	70	77	77	67	77	71	63	77	66	60	71	63	56	67	60	52	64	57	60	61	54	57
		20-27	Interior	87	87	87	87	87	87	87	87	87	87	87	87	87	87	87	87	87	87	87	87	87	87	87	83	87	84	77	87	78	71	87	73	67	87	69	64	83	65	61
			Exposed	87	87	87	87	87	87	87	87	87	87	87	84	87	87	80	87	83	76	87	80	73	87	74	67	87	69	63	81	64	60	76	62	58	72	59	54	69	56	51
		27-45	Interior	90	90	90	90	90	90	90	90	90	90	90	90	90	90	90	90	90	90	90	90	90	90	90	89	90	90	83	90	86	77	87	80	73	81	76	69	77	72	65
			Exposed	90	90	90	90	90	90	90	90	90	90	90	90	90	90	86	90	90	82	90	87	79	87	81	73	81	75	68	75	71	64	70	67	61	66	64	59	63	61	56
	C	0-7	Interior	77	77	77	77	77	77	77	77	77	77	77	77	77	77	77	77	77	75	77	77	72	77	77	67	77	72	63	77	68	60	74	65	57	70	62	54	66	60	51
			Exposed	77	77	77	77	77	74	77	77	71	77	77	68	77	75	65	77	72	63	77	69	61	74	65	58	69	62	53	65	59	49	62	55	57	60	52	54	57	59	51
		7-20	Interior	77	77	77	77	77	77	77	77	77	77	77	77	77	77	75	77	77	71	77	77	68	77	73	64	77	68	61	73	64	58	69	61	54	65	59	51	63	55	59
			Exposed	77	77	74	77	77	71	77	77	67	77	74	64	77	70	62	77	67	60	75	65	59	69	61	54	65	58	50	62	54	57	59	51	54	56	58	50	52	55	45
		20-27	Interior	87	87	87	87	87	87	87	87	87	87	87	86	87	87	82	87	86	78	87	82	75	87	76	69	87	70	65	83	66	62	78	63	59	74	60	56	70	58	52
			Exposed	87	87	82	87	85	77	87	80	73	87	76	70	87	73	67	87	70	64	85	67	62	79	63	59	73	60	55	69	56	51	65	53	59	62	49	55	60	57	52
		27-45	Interior	90	90	90	90	90	90	90	90	90	90	90	90	90	90	88	90	90	85	90	90	81	89	83	75	83	77	70	77	73	66	72	68	63	68	65	60	65	62	57
			Exposed	90	90	88	90	90	84	90	88	79	90	84	76	86	80	73	82	77	70	79	74	67	73	69	63	68	64	60	64	61	56	61	59	53	59	55	60	55	52	57
	D	0-7	Interior	77	77	77	77	77	77	77	77	77	77	77	75	77	77	72	77	77	69	77	77	67	77	72	63	77	67	60	72	64	56	68	61	52	65	58	60	62	55	57
			Exposed	77	77	72	77	77	68	77	75	65	77	72	63	77	69	61	76	67	59	73	65	57	68	61	53	64	58	59	61	54	56	59	50	52	55	58	48	52	55	42
		7-20	Interior	77	77	77	77	77	77	77	77	75	77	77	72	77	77	68	77	75	66	77	72	64	77	67	60	72	63	57	67	60	53	64	57	60	61	54	57	59	51	54
			Exposed	77	77	68	77	74	65	77	71	63	77	68	61	75	65	59	72	63	56	69	61	54	64	57	60	61	53	56	58	60	52	54	57	48	51	53	42	59	50	37
		20-27	Interior	88	88	88	88	88	87	88	88	83	88	86	78	88	82	75	88	78	72	88	75	69	88	69	64	82	65	61	77	62	58	72	59	54	68	56	51	65	53	59
			Exposed	88	82	75	88	77	71	88	74	67	88	70	65	85	67	62	81	65	61	78	63	59	73	59	54	68	55	50	64	52	58	61	59	54	59	56	51	56	52	45
		27-45	Interior	92	92	92	92	92	92	92	92	89	92	92	85	92	90	81	92	86	78	89	82	74	82	76	69	76	71	65	71	67	62	66	64	59	63	61	56	61	59	52
			Exposed	92	89	81	92	85	77	87	81	73	83	77	70	79	74	67	75	71	64	72	68	63	67	64	59	63	61	55	60	58	51	57	54	59	54	51	56	50	59	52
40	B	0-7	Interior	74	74	74	74	74	74	74	74	74	74	74	74	74	74	74	74	74	74	74	74	74	74	74	74	74	74	74	74	74	69	74	74	65	74	71	62	74	68	60
			Exposed	74	74	74	74	74	74	74	74	74	74	74	74	74	74	74	74	74	73	74	74	70	74	74	65	74	71	62	74	67	59	72	63	56	68	61	52	65	59	60
		7-20	Interior	74	74	74	74	74	74	74	74	74	74	74	74	74	74	74	74	74	74	74	74	74	74	74	74	74	74	70	74	74	65	74	71	63	74	67	60	73	64	57
			Exposed	74	74	74	74	74	74	74	74	74	74	74	74	74	74	73	74	74	70	74	74	67	74	71	63	74	66	60	71	63	56	67	60	52	64	57	60	61	54	57
		20-27	Interior	80	80	80	80	80	80	80	80	80	80	80	80	80	80	80	80	80	80	80	80	80	80	80	80	80	80	77	80	78	71	80	73	67	80	69	64	79	65	61
			Exposed	80	80	80	80	80	80	80	80	80	80	80	80	80	80	80	80	80	76	80	80	73	80	74	67	80	69	63	80	64	60	76	62	58	72	59	54	69	56	51
		27-45	Interior	86	86	86	86	86	86	86	86	86	86	86	86	86	86	86	86	86	86	86	86	86	86	86	86	86	86	83	85	85	77	83	80	73	80	76	69	77	72	65
			Exposed	86	86	86	86	86	86	86	86	86	86	86	86	86	86	86	86	86	82	86	86	79	86	81	73	81	75	68	75	71	64	70	67	61	66	64	59	63	61	56
	C	0-7	Interior	74	74	74	74	74	74	74	74	74	74	74	74	74	74	74	74	74	74	74	74	72	74	74	67	74	72	63	74	68	60	74	65	57	70	62	54	66	60	51
			Exposed	74	74	74	74	74	74	74	74	71	74	74	68	74	74	65	74	72	63	74	69	61	74	65	58	69	62	53	65	59	49	62	55	57	60	52	54	57	59	51
		7-20	Interior	74	74	74	74	74	74	74	74	74	74	74	74	74	74	74	74	74	71	74	74	68	74	73	64	74	68	61	73	64	58	69	61	54	65	59	51	63	55	59
			Exposed	74	74	74	74	74	71	74	74	67	74	74	64	74	70	62	74	67	60	74	65	59	69	61	54	65	58	50	62	54	57	59	51	54	56	58	50	52	55	45
		20-27	Interior	80	80	80	80	80	80	80	80	80	80	80	80	80	80	80	80	80	78	80	80	75	80	76	69	80	70	65	79	66	62	77	63	59	74	60	56	70	58	52
			Exposed	80	80	80	80	80	77	80	80	73	80	76	70	80	73	67	80	70	64	80	67	62	79	63	59	73	60	55	69	56	51	65	53	59	62	49	55	60	57	52
		27-45	Interior	86	86	86	86	86	86	86	86	86	86	86	86	86	86	86	86	86	85	86	86	81	84	83	75	81	77	70	77	73	66	72	68	63	68	65	60	65	62	57
			Exposed	86	86	86	86	86	84	86	86	79	86	84	76	86	80	73	82	77	70	79	74	67	73	69	63	68	64	60	64	61	56	61	59	53	59	55	60	55	52	57
	D	0-7	Interior	77	77	77	77	77	77	77	77	77	77	77	75	77	77	72	77	77	69	77	77	67	77	72	63	77	67	60	72	64	56	68	61	52	65	58	60	62	55	57
			Exposed	77	77	72	77	77	68	77	75	65	77	72	63	77	69	61	76	67	59	73	65	57	68	61	53	64	58	59	61	54	56	59	50	52	55	58	48	52	55	42
		7-20	Interior	77	77	77	77	77	77	77	77	75	77	77	72	77	77	68	77	75	66	77	72	64	77	67	60	72	63	57	67	60	53	64	57	60	61	54	57	59	51	54
			Exposed	77	77	68	77	74	65	77	71	63	77	68	61	75	65	59	72	63	56	69	61	54	64	57	60	61	53	56	58	60	52	54	57	48	51	53	42	59	50	37
		20-27	Interior	82	82	82	82	82	82	82	82	82	82	82	78	82	82	75	82	78	72	82	75	69	82	69	64	81	65	61	77	62	58	72	59	54	68	56	51	65	53	59
			Exposed	82	82	75	82	77	71	82	74	67	82	70	65	82	67	62	81	65	61	78	63	59	73	59	54	68	55	50	64	52	58	61	59	54	59	56	51	56	52	45
		27-45	Interior	88	88	88	88	88	88	88	88	88	88	88	85	88	88	81	87	86	78	86	82	74	82	76	69	76	71	65	71	67	62	66	64	59	63	61	56	61	59	52
			Exposed	88	88	81	88	85	77	87	81	73	83	77	70	79	74	67	75	71	64	72	68	63	67	64	59	63	61	55	60	58	51	57	54	59	54	51	56	50	59	52
50	B	0-7	Interior	69	69	69	69	69	69	69	69	69	69	69	69	69	69	69	69	69	69	69	69	69	69	69	69	69	69	69	69	69	69	69	69	65	69	69	62	69	69	60
			Exposed	69	69	69	69	69	69	69	69	69	69	69	69	69	69	69	69	69	69	69	69	69	69	69	65	69	69	62	69	67	59	69	63	56	68	61	52	65	59	60
		7-20	Interior	69	69	69	69	69	69	69	69	69	69	69	69	69	69	69	69	69	69	69	69	69	69	69	69	69	69	69	69	69	65	69	69	63	69	67	60	68	64	57
			Exposed	69	69	69	69	69	69	69	69	69	69	69	69	69	69	69	69	69	69	69	69	67	69	69	63	69	66	60	69	63	56	67	60	52	64	57	60	61	54	57
		20-27	Interior	75	75	75	75	75	75	75	75	75	75	75	75	75	75	75	75	75	75	75	75	75	75	75	75	75	75	75	75	75	71	75	73	67	75	69	64	73	65	61
			Exposed	75	75	75	75	75	75	75	75	75	75	75	75	75	75	75	75	75	75	75	75	73	75	74	67	75	69	63	75	64	60	75	62	58	72	59	54	69	56	51
		27-45	Interior	81	81	81	81	81	81	81	81	81	81	81	81	81	81	81	81	81	81	81	81	81	81	81	81	81	81	81	79	79	77	77	77	73	75	75	69	73	72	65
			Exposed	81	81	81	81	81	81	81	81	81	81	81	81	81	81	81	81	81	81	81	81	79	81	81	73	81	75	68	75	71	64	70	67	61	66	64	59	63	61	56
	C	0-7	Interior	69	69	69	69	69	69	69	69	69	69	69	69	69	69	69	69	69	69	69	69	69	69	69	67	69	69	63	69	68	60	69	65	57	69	62	54	66	60	51
			Exposed	69	69	69	69	69	69	69	69	69	69	69	68	69	69	65	69	69	63	69	69	61	69	65	58	69	62	53	65	59	49	62	55	57	60	52	54	57	59	51
		7-20	Interior	69	69	69	69	69	69	69	69	69	69	69	69	69	69	69	69	69	69	69	69	68	69	69	64	69	68	61	68	64	58	67	61	54	65	59	51	63	55	59
			Exposed	69	69	69	69	69	69	69	69	67	69	69	64	69	69	62	69	67	60	69	65	59	69	61	54	65	58	50	62	54	57	59	51	54	56	58	50	52	55	45
		20-27	Interior	75	75	75	75	75	75	75	75	75	75	75	75	75	75	75	75	75	75	75	75	75	75	75	69	75	70	65	73	66	62	72	63	59	70	60	56	69	58	52
			Exposed	75	75	75	75	75	75	75	75	73	75	75	70	75	73	67	75	70	64	75	67	62	75	63	59	73	60	55	69	56	51	65	53	59	62	49	55	60	57	52
		27-45	Interior	81	81	81	81	81	81	81	81	81	81	81	81	81	81	81	81	81	81	81	81	81	78	78	75	76	76	70	73	73	66	71	68	63	68	65	60	65	62	57
			Exposed	81	81	81	81	81	81	81	81	79	81	81	76	81	80	73	81	77	70	79	74	67	73	69	63	68	64	60	64	61	56	61	59	53	59	55	60	55	52	57
	D	0-7	Interior	71	71	71	71	71	71	71	71	71	71	71	71	71	71	71	71	71	69	71	71	67	71	71	63	71	67	60	71	64	56	68	61	52	65	58	60	62	55	57
			Exposed	71	71	71	71	71	68	71	71	65	71	71	63	71	69	61	71	67	59	71	65	57	68	61	53	64	58	59	61	54	56	59	50	52	55	58	48	52	55	42
		7-20	Interior	72	72	72	72	72	72	72	72	72	72	72	72	72	72	68	72	72	66	72	72	64	72	67	60	70	63	57	67	60	53	64	57	60	61	54	57	59	51	54
			Exposed	72	72	68	72	72	65	72	71	63	72	68	61	72	65	59	72	63	56	69	61	54	64	57	60	61	53	56	58	60	52	54	57	48	51	53	42	59	50	37
		20-27	Interior	77	77	77	77	77	77	77	77	77	77	77	77	77	77	75	77	77	72	77	75	69	77	69	64	76	65	61	74	62	58	72	59	54	68	56	51	65	53	59
			Exposed	77	77	75	77	77	71	77	74	67	77	70	65	77	67	62	77	65	61	77	63	59	73	59	54	68	55	50	64	52	58	61	59	54	59	56	51	56	52	45
		27-45	Interior	83	83	83	83	83	83	83	83	83	83	83	83	83	83	81	82	82	78	81	81	74	78	76	69	75	71	65	71	67	62	66	64	59	63	61	56	61	59	52
			Exposed	83	83	81	83	83	77	83	81	73	83	77	70	79	74	67	75	71	64	72	68	63	67	64	59	63	61	55	60	58	51	57	54	59	54	51	56	50	59	52

* Cells with an astrisks indicates that the L-foot must be oriented in the Y- direction as indicated in the image.

10 Highlighted cell indicate 3-rail system span. Contact Unirac Engineering Services for support.

~~10~~ Highlighted cell with strikethrough indicate 3-rail system span and module clamp allowable capacity exceeds with 3-rails. 4-Rail system required. Contact Unirac Engineering Services for support.

UNIRAC

ASCE 7-22	II	30 ft	Ss = 3.00	19 sq.ft	LANDSCAPE	CROSS-SLOPE	NXT	NXT COMBO	Stronghold BUTYL Rafter #14S
Design Standard	Risk Category	Roof Height	Seismic	Module Area	Orientation	Rail Direction	Rail Type	Clamp	Attachment

SPAN TABLES

Maximum Allowable Rail Spans for Rooftop Solar Panels Parallel to the Roof Surface (inches)

| Ground Snow Load (psf) | Wind Exposure Category | Roof Tilt Angle (deg) | Panel Exposure | Basic Wind Speed (mph) | | |

UNIRAC

ASCE 7-22	II	30 ft	Ss = 3.00	19 sq.ft	LANDSCAPE	CROSS-SLOPE	NXT	NXT COMBO	Stronghold BUTYL Rafter #14S
Design Standard	Risk Category	Roof Height	Seismic	Module Area	Orientation	Rail Direction	Rail Type	Clamp	Attachment

SPAN TABLES

Maximum Allowable Rail Spans for Rooftop Solar Panels Parallel to the Roof Surface (inches)

Ground Snow Load (psf)	Wind Exposure Category	Roof Tilt Angle (deg)	Panel Exposure	Basic Wind Speed (mph)																																						
				90			95			100			105			110			115			120			130			140			150			160			170			180		
				Roof Wind Zone																																						
				1	2	3	1	2	3	1	2	3	1	2	3	1	2	3	1	2	3	1	2	3	1	2	3	1	2	3	1	2	3	1	2	3	1	2	3	1	2	3
90	B	0-7	Interior	52	52	52	52	52	52	52	52	52	52	52	52	52	52	52	52	52	52	52	52	52	52	52	52	52	52	52	52	52	52	52	52	52	52	52	52	52	52	52
			Exposed	52	52	52	52	52	52	52	52	52	52	52	52	52	52	52	52	52	52	52	52	52	52	52	52	52	52	52	52	52	52	52	52	52	52	52	52	52	52	60
		7-20	Interior	52	52	52	52	52	52	52	52	52	52	52	52	52	52	52	52	52	52	52	52	52	52	52	52	52	52	52	52	52	52	52	52	52	52	52	52	52	52	52
			Exposed	52	52	52	52	52	52	52	52	52	52	52	52	52	52	52	52	52	52	52	52	52	52	52	52	52	52	52	52	52	52	52	52	52	52	52	60	52	52	57
		20-27	Interior	58	58	58	58	58	58	58	58	58	58	58	58	58	58	58	58	58	58	58	58	58	58	58	58	58	58	58	58	58	58	58	58	58	58	58	58	58	58	58
			Exposed	58	58	58	58	58	58	58	58	58	58	58	58	58	58	58	58	58	58	58	58	58	58	58	58	58	58	58	58	58	58	58	58	58	58	58	54	58	56	51
		27-45	Interior	73*	73*	73*	73*	73*	73*	73*	73*	73*	73*	73*	73*	73*	73*	73*	73*	73*	73*	73*	73*	73*	73*	73*	73*	73*	73*	73*	71*	71*	71*	73*	73*	73*	78*	62	62	61	61	61
			Exposed	73*	73*	73*	73*	73*	73*	73*	73*	73*	73*	73*	73*	73*	73*	73*	73*	73*	73*	73*	73*	73*	73*	73*	73*	73*	73*	65	71*	71*	64	63	63	61	62	62	59	61	61	56
	C	0-7	Interior	52	52	52	52	52	52	52	52	52	52	52	52	52	52	52	52	52	52	52	52	52	52	52	52	52	52	52	52	52	52	52	52	52	52	52	52	52	52	51
			Exposed	52	52	52	52	52	52	52	52	52	52	52	52	52	52	52	52	52	52	52	52	52	52	52	52	52	52	52	52	52	49	52	52	57	52	52	54	52	59	51
		7-20	Interior	52	52	52	52	52	52	52	52	52	52	52	52	52	52	52	52	52	52	52	52	52	52	52	52	52	52	52	52	52	52	52	52	52	52	52	51	52	52	59
			Exposed	52	52	52	52	52	52	52	52	52	52	52	52	52	52	52	52	52	52	52	52	52	52	52	52	52	52	50	52	52	57	52	51	54	52	58	50	52	55	45
		20-27	Interior	58	58	58	58	58	58	58	58	58	58	58	58	58	58	58	58	58	58	58	58	58	58	58	58	58	58	58	58	58	58	58	58	58	58	58	56	57	57	52
			Exposed	58	58	58	58	58	58	58	58	58	58	58	58	58	58	58	58	58	58	58	58	58	58	58	58	58	58	55	58	56	51	58	53	59	58	49	55	57	57	52
		27-45	Interior	73*	73*	73*	73*	73*	73*	73*	73*	73*	73*	73*	73*	73*	73*	73*	73*	73*	73*	72*	72*	72*	74*	74*	74*	75*	75*	63	61	61	61	60	60	60	59	59	59	57	57	57
			Exposed	73*	73*	73*	73*	73*	73*	73*	73*	73*	73*	73*	73*	73*	73*	73*	73*	73*	65	72*	72*	65	73*	64	63	63	63	60	61	61	56	60	59	53	59	55	60	55	52	57
	D	0-7	Interior	55	55	55	55	55	55	55	55	55	55	55	55	55	55	55	55	55	55	55	55	55	55	55	55	55	55	55	55	55	55	55	55	52	55	55	60	55	55	57
			Exposed	55	55	55	55	55	55	55	55	55	55	55	55	55	55	55	55	55	55	55	55	55	55	55	53	55	55	59	55	54	56	55	50	52	55	58	48	52	55	42
		7-20	Interior	55	55	55	55	55	55	55	55	55	55	55	55	55	55	55	55	55	55	55	55	55	55	55	55	55	55	55	55	55	53	55	55	60	54	54	57	53	51	54
			Exposed	55	55	55	55	55	55	55	55	55	55	55	55	55	55	55	55	55	55	55	55	54	55	55	60	55	53	56	55	60	52	54	57	48	51	53	42	59	50	37
		20-27	Interior	61	61	61	61	61	61	61	61	61	61	61	61	61	61	61	61	61	61	61	61	61	61	61	61	61	61	61	61	61	58	59	59	54	58	56	51	57	53	59
			Exposed	61	61	61	61	61	61	61	61	61	61	61	61	61	61	61	61	61	61	61	61	59	61	59	54	61	55	50	61	52	58	59	59	54	58	56	51	56	52	45
		27-45	Interior	82*	82*	82*	82*	82*	82*	82*	82*	82*	82*	82*	82*	82*	82*	68	67	67	67	66	66	66	65	65	65	63	63	63	61	61	61	60	60	59	58	58	56	57	57	52
			Exposed	82*	82*	69	82*	82*	69	82*	69	69	82*	69	69	68	68	67	67	67	64	66	66	63	65	64	59	63	61	55	60	58	51	57	54	59	54	51	56	50	59	52
100	B	0-7	Interior	49	49	49	49	49	49	49	49	49	49	49	49	49	49	49	49	49	49	49	49	49	49	49	49	49	49	49	49	49	49	49	49	49	49	49	49	49	49	49
			Exposed	49	49	49	49	49	49	49	49	49	49	49	49	49	49	49	49	49	49	49	49	49	49	49	49	49	49	49	49	49	49	49	49	49	49	49	49	49	49	60
		7-20	Interior	50	50	50	50	50	50	50	50	50	50	50	50	50	50	50	50	50	50	50	50	50	50	50	50	50	50	50	50	50	50	50	50	50	50	50	50	50	50	50
			Exposed	50	50	50	50	50	50	50	50	50	50	50	50	50	50	50	50	50	50	50	50	50	50	50	50	50	50	50	50	50	50	50	50	50	50	50	60	50	50	57
		20-27	Interior	55	55	55	55	55	55	55	55	55	55	55	55	55	55	55	55	55	55	55	55	55	55	55	55	55	55	55	55	55	55	55	55	55	55	55	55	55	55	55
			Exposed	55	55	55	55	55	55	55	55	55	55	55	55	55	55	55	55	55	55	55	55	55	55	55	55	55	55	55	55	55	55	55	55	55	55	55	54	55	55	51
		27-45	Interior	66*	66*	66*	66*	66*	66*	66*	66*	66*	66*	66*	66*	66*	66*	66*	66*	66*	66*	66*	66*	66*	66*	66*	66*	66*	66*	66*	65*	65*	65*	64*	64*	64*	66*	66*	66*	67*	67*	59
			Exposed	66*	66*	66*	66*	66*	66*	66*	66*	66*	66*	66*	66*	66*	66*	66*	66*	66*	66*	66*	66*	66*	66*	66*	66*	66*	66*	66*	65*	65*	64*	64*	64*	61	66*	60	59	59	59	56
	C	0-7	Interior	49	49	49	49	49	49	49	49	49	49	49	49	49	49	49	49	49	49	49	49	49	49	49	49	49	49	49	49	49	49	49	49	49	49	49	49	49	49	49
			Exposed	49	49	49	49	49	49	49	49	49	49	49	49	49	49	49	49	49	49	49	49	49	49	49	49	49	49	49	49	49	49	49	49	57	49	49	54	49	59	51
		7-20	Interior	50	50	50	50	50	50	50	50	50	50	50	50	50	50	50	50	50	50	50	50	50	50	50	50	50	50	50	50	50	50	50	50	50	50	50	50	50	50	59
			Exposed	50	50	50	50	50	50	50	50	50	50	50	50	50	50	50	50	50	50	50	50	50	50	50	50	50	50	50	50	50	57	50	50	54	50	58	50	50	55	45
		20-27	Interior	55	55	55	55	55	55	55	55	55	55	55	55	55	55	55	55	55	55	55	55	55	55	55	55	55	55	55	55	55	55	55	55	55	55	55	55	55	55	52
			Exposed	55	55	55	55	55	55	55	55	55	55	55	55	55	55	55	55	55	55	55	55	55	55	55	55	55	55	55	55	55	51	55	53	59	55	49	55	55	57	52
		27-45	Interior	66*	66*	66*	66*	66*	66*	66*	66*	66*	66*	66*	66*	66*	66*	66*	66*	66*	66*	66*	66*	66*	65*	65*	65*	66*	66*	66*	67*	67*	66*	68*	68*	58	57	57	57	56	56	56
			Exposed	66*	66*	66*	66*	66*	66*	66*	66*	66*	66*	66*	66*	66*	66*	66*	66*	66*	62	66*	66*	66*	65*	65*	62	66*	65*	60	59	59	56	58	58	53	57	55	60	55	52	57
	D	0-7	Interior	52	52	52	52	52	52	52	52	52	52	52	52	52	52	52	52	52	52	52	52	52	52	52	52	52	52	52	52	52	52	52	52	52	52	52	60	52	52	57
			Exposed	52	52	52	52	52	52	52	52	52	52	52	52	52	52	52	52	52	52	52	52	52	52	52	52	52	52	59	52	52	56	52	50	52	52	58	48	52	55	42
		7-20	Interior	52	52	52	52	52	52	52	52	52	52	52	52	52	52	52	52	52	52	52	52	52	52	52	52	52	52	52	52	52	52	52	52	60	52	52	57	52	51	54
			Exposed	52	52	52	52	52	52	52	52	52	52	52	52	52	52	52	52	52	52	52	52	52	52	52	60	52	52	56	52	60	52	52	57	48	51	53	42	59	50	37
		20-27	Interior	58	58	58	58	58	58	58	58	58	58	58	58	58	58	58	58	58	58	58	58	58	58	58	58	58	58	58	58	58	58	57	57	54	56	56	51	56	53	59
			Exposed	58	58	58	58	58	58	58	58	58	58	58	58	58	58	58	58	58	54	58	58	58	58	58	54	58	55	50	58	52	58	57	59	54	56	56	51	56	52	45
		27-45	Interior	73*	73*	73*	73*	73*	73*	73*	73*	73*	73*	73*	73*	72*	72*	72*	71*	71*	71*	74*	74*	74*	78*	62	62	61	61	61	60	60	60	58	58	58	57	57	56	55	55	52
			Exposed	73*	73*	73*	73*	73*	73*	73*	73*	73*	73*	73*	65	72*	72*	65	71*	71*	64	64	64	63	62	62	59	61	61	55	60	58	51	57	54	59	54	51	56	50	59	52

*	Cells with an astrisks indicates that the L-foot must be oriented in the Y- direction as indicated in the image.
10	Highlighted cell indicate 3-rail system span. Contact Unirac Engineering Services for support.
~~10~~	Highlighted cell with strikethrough indicate 3-rail system span and module clamp allowable capacity exceeds with 3-rails. 4-Rail system required. Contact Unirac Engineering Services for support.

UNIRAC

ASCE 7-22	II	30 ft	Ss = 3.00	23 sq.ft	PORTRAIT	CROSS-SLOPE	NXT	NXT COMBO	Stronghold BUTYL Rafter #14S
Design Standard	Risk Category	Roof Height	Seismic	Module Area	Orientation	Rail Direction	Rail Type	Clamp	Attachment

SPAN TABLES

Maximum Allowable Rail Spans for Rooftop Solar Panels Parallel to the Roof Surface (inches)

Ground Snow Load (psf)	Wind Exposure Category	Roof Tilt Angle (deg)	Panel Exposure	Basic Wind Speed (mph)																																						
				90			95			100			105			110			115			120			130			140			150			160			170			180		
				Roof Wind Zone																																						
				1	2	3	1	2	3	1	2	3	1	2	3	1	2	3	1	2	3	1	2	3	1	2	3	1	2	3	1	2	3	1	2	3	1	2	3	1	2	3
0	B	0-7	Interior	79	79	79	79	79	79	79	79	79	79	79	77	79	79	74	79	79	71	79	77	68	79	72	64	77	68	60	73	64	56	69	61	52	66	58	44	63	54	37
			Exposed	79	79	73	79	79	70	79	76	67	79	73	65	79	70	62	77	68	60	74	66	58	69	61	52	65	58	43	62	53	35	59	47	31	55	39	41	51	34	36
		7-20	Interior	79	79	79	79	79	79	79	79	78	79	79	75	79	79	72	79	78	69	79	75	66	79	70	62	75	66	58	71	62	53	67	59	46	63	54	37	61	50	32
			Exposed	79	79	71	79	77	68	79	74	65	79	71	63	78	68	60	75	65	58	72	63	55	67	59	46	63	54	36	59	46	31	55	37	41	51	32	36	41	28	32
		20-27	Interior	79	79	79	79	79	79	79	79	79	79	79	79	79	79	78	79	79	75	79	78	72	79	73	67	79	68	63	78	64	60	74	61	55	70	57	51	67	53	41
			Exposed	79	79	78	79	79	74	79	77	71	79	73	68	79	70	65	79	68	63	79	65	61	74	61	56	70	57	50	66	52	39	62	42	33	59	35	29	56	31	39
		27-45	Interior	80	80	80	80	80	80	80	80	80	80	80	80	80	80	80	80	80	79	80	80	77	80	78	72	79	73	67	74	69	63	70	65	60	66	62	57	63	59	52
			Exposed	80	80	80	80	80	79	80	80	75	80	78	72	80	75	69	78	73	67	75	70	65	70	66	60	66	62	56	62	58	51	59	54	42	54	49	35	50	40	31
	C	0-7	Interior	79	79	75	79	79	72	79	78	69	79	75	66	79	72	64	79	69	61	76	67	59	71	63	54	67	59	47	63	55	38	60	50	32	57	42	43	53	36	38
			Exposed	79	72	63	78	69	61	75	66	58	72	63	55	69	61	51	67	59	46	64	56	40	60	51	33	56	41	42	51	34	37	43	30	32	36	40	28	32	35	25
		7-20	Interior	79	79	73	79	79	70	79	75	67	79	72	64	79	69	62	76	67	59	74	65	57	69	60	51	64	56	39	61	51	33	57	41	29	53	34	38	46	30	34
			Exposed	79	69	62	76	66	59	72	63	55	69	61	52	67	59	45	64	55	38	62	52	34	57	41	29	52	33	37	42	29	32	34	38	28	30	34	25	41	30	22
		20-27	Interior	79	79	79	79	79	76	79	78	72	79	75	69	79	72	67	79	69	64	79	67	62	76	62	58	71	59	52	67	54	42	64	47	34	61	37	30	58	33	41
			Exposed	79	72	67	79	69	64	79	66	61	77	63	58	74	61	55	71	58	52	68	55	46	64	48	35	60	36	30	56	31	39	52	41	34	44	36	30	37	32	27
		27-45	Interior	80	80	80	80	80	80	80	80	77	80	80	74	80	77	71	80	74	68	77	72	66	72	67	62	67	63	58	64	60	53	60	56	46	56	52	37	52	44	32
			Exposed	80	77	71	79	73	68	76	70	65	72	68	62	70	65	60	67	63	57	65	61	54	60	56	46	56	51	36	51	41	31	40	34	41	34	30	36	30	41	32
	D	0-7	Interior	79	79	70	79	75	67	79	72	64	79	69	61	76	67	59	73	65	56	71	62	53	66	59	45	62	53	36	59	47	31	55	39	41	51	33	36	43	30	32
			Exposed	76	67	59	72	64	55	69	61	52	67	59	46	64	56	40	62	53	35	60	50	32	55	39	41	50	33	35	40	43	31	34	38	27	30	33	24	40	29	21
		7-20	Interior	79	77	68	79	73	65	79	70	62	77	67	60	74	64	57	71	62	53	68	60	50	64	55	37	60	48	31	55	37	41	51	32	36	41	43	32	34	38	28
			Exposed	73	64	56	70	62	52	67	59	46	64	55	39	62	52	34	60	47	31	57	40	43	51	32	36	40	42	31	33	36	27	29	32	24	38	28	21	34	25	19
		20-27	Interior	79	79	74	79	76	70	79	73	67	79	70	64	79	67	62	78	64	60	75	62	57	70	58	51	66	52	40	63	43	33	59	35	29	55	31	38	52	41	34
			Exposed	79	67	62	77	64	59	74	61	55	71	59	52	68	55	46	66	52	39	64	46	34	60	35	29	55	30	38	50	39	33	40	34	29	34	30	25	30	27	22
		27-45	Interior	80	80	78	80	80	75	80	78	71	80	74	69	77	72	66	74	69	64	71	67	61	67	62	57	63	59	52	59	54	42	54	49	35	49	40	30	40	34	41
			Exposed	77	71	66	73	68	63	70	66	60	67	63	58	65	61	54	62	59	51	60	56	45	55	49	35	48	39	30	37	33	39	32	43	34	42	38	30	38	34	27
10	B	0-7	Interior	71	71	71	71	71	71	71	71	71	71	71	71	71	71	71	71	71	71	71	71	68	71	71	64	71	68	60	71	64	56	69	61	52	66	58	44	63	54	37
			Exposed	71	71	71	71	71	70	71	71	67	71	71	65	71	70	62	71	68	60	71	66	58	69	61	52	65	58	43	62	53	35	59	47	31	55	39	41	51	34	36
		7-20	Interior	71	71	71	71	71	71	71	71	71	71	71	71	71	71	71	71	71	69	71	71	66	71	70	62	71	66	58	71	62	53	67	59	46	63	54	37	61	50	32
			Exposed	71	71	71	71	71	68	71	71	65	71	71	63	71	68	60	71	65	58	71	63	55	67	59	46	63	54	36	59	46	31	55	37	41	51	32	36	41	28	32
		20-27	Interior	76	76	76	76	76	76	76	76	76	76	76	76	76	76	76	76	76	75	76	76	72	76	73	67	76	68	63	76	64	60	74	61	55	70	57	51	67	53	41
			Exposed	76	76	76	76	76	74	76	76	71	76	73	68	76	70	65	76	68	63	76	65	61	74	61	56	70	57	50	66	52	39	62	42	33	59	35	29	56	31	39
		27-45	Interior	79	79	79	79	79	79	79	79	79	79	79	79	79	79	79	79	79	79	79	79	77	79	78	72	79	73	67	74	69	63	70	65	60	66	62	57	63	59	52
			Exposed	79	79	79	79	79	79	79	79	75	79	78	72	79	75	69	78	73	67	75	70	65	70	66	60	66	62	56	62	58	51	59	54	42	54	49	35	50	40	31
	C	0-7	Interior	71	71	71	71	71	71	71	71	69	71	71	66	71	71	64	71	69	61	71	67	59	71	63	54	67	59	47	63	55	38	60	50	32	57	42	43	53	36	38
			Exposed	71	71	63	71	69	61	71	66	58	71	63	55	69	61	51	67	59	46	64	56	40	60	51	33	56	41	42	51	34	37	43	30	32	36	40	28	32	35	25
		7-20	Interior	71	71	71	71	71	70	71	71	67	71	71	64	71	69	62	71	67	59	71	65	57	69	60	51	64	56	39	61	51	33	57	41	29	53	34	38	46	30	34
			Exposed	71	69	62	71	66	59	71	63	55	69	61	52	67	59	45	64	55	38	62	52	34	57	41	29	52	33	37	42	29	32	34	38	28	30	34	25	41	30	22
		20-27	Interior	76	76	76	76	76	76	76	76	72	76	75	69	76	72	67	76	69	64	76	67	62	76	62	58	71	59	52	67	54	42	64	47	34	61	37	30	58	33	41
			Exposed	76	72	67	76	69	64	76	66	61	76	63	58	74	61	55	71	58	52	68	55	46	64	48	35	60	36	30	56	31	39	52	41	34	44	36	30	37	32	27
		27-45	Interior	79	79	79	79	79	79	79	79	77	79	79	74	79	77	71	79	74	68	77	72	66	72	67	62	67	63	58	64	60	53	60	56	46	56	52	37	52	44	32
			Exposed	79	77	71	79	73	68	76	70	65	72	68	62	70	65	60	67	63	57	65	61	54	60	56	46	56	51	36	51	41	31	40	34	41	34	30	36	30	41	32
	D	0-7	Interior	71	71	70	71	71	67	71	71	64	71	69	61	71	67	59	71	65	56	71	62	53	66	59	45	62	53	36	59	47	31	55	39	41	51	33	36	43	30	32
			Exposed	71	67	59	71	64	55	69	61	52	67	59	46	64	56	40	62	53	35	60	50	32	55	39	41	50	33	35	40	43	31	34	38	27	30	33	24	40	29	21
		7-20	Interior	71	71	68	71	71	65	71	70	62	71	67	60	71	64	57	71	62	53	68	60	50	64	55	37	60	48	31	55	37	41	51	32	36	41	43	32	34	38	28
			Exposed	71	64	56	70	62	52	67	59	46	64	55	39	62	52	34	60	47	31	57	40	43	51	32	36	40	42	31	33	36	27	29	32	24	38	28	21	34	25	19
		20-27	Interior	77	77	74	77	76	70	77	73	67	77	70	64	77	67	62	77	64	60	75	62	57	70	58	51	66	52	40	63	43	33	59	35	29	55	31	38	52	41	34
			Exposed	77	67	62	77	64	59	74	61	55	71	59	52	68	55	46	66	52	39	64	46	34	60	35	29	55	30	38	50	39	33	40	34	29	34	30	25	30	27	22
		27-45	Interior	80	80	78	80	80	75	80	78	71	80	74	69	77	72	66	74	69	64	71	67	61	67	62	57	63	59	52	59	54	42	54	49	35	49	40	30	40	34	41
			Exposed	77	71	66	73	68	63	70	66	60	67	63	58	65	61	54	62	59	51	60	56	45	55	49	35	48	39	30	37	33	39	32	43	34	42	38	30	38	34	27
20	B	0-7	Interior	61	61	61	61	61	61	61	61	61	61	61	61	61	61	61	61	61	61	61	61	61	61	61	61	61	61	60	61	61	56	61	61	52	61	58	44	61	54	37
			Exposed	61	61	61	61	61	61	61	61	61	61	61	61	61	61	61	61	61	60	61	61	58	61	61	52	61	58	43	61	53	35	59	47	31	55	39	41	51	34	36
		7-20	Interior	61	61	61	61	61	61	61	61	61	61	61	61	61	61	61	61	61	61	61	61	61	61	61	61	61	61	58	61	61	53	61	59	46	61	54	37	61	50	32
			Exposed	61	61	61	61	61	61	61	61	61	61	61	61	61	61	60	61	61	58	61	61	55	61	59	46	61	54	36	59	46	31	55	37	41	51	32	36	41	28	32
		20-27	Interior	67	67	67	67	67	67	67	67	67	67	67	67	67	67	67	67	67	67	67	67	67	67	67	67	67	67	63	67	64	60	67	61	55	67	57	51	67	53	41
			Exposed	67	67	67	67	67	67	67	67	67	67	67	67	67	67	65	67	67	63	67	65	61	67	61	56	67	57	50	66	52	39	62	42	33	59	35	29	56	31	39
		27-45	Interior	71	71	71	71	71	71	71	71	71	71	71	71	71	71	71	71	71	71	71	71	71	71	71	71	71	71	67	71	69	63	69	65	60	66	62	57	63	59	52
			Exposed	71	71	71	71	71	71	71	71	71	71	71	71	71	71	69	71	71	67	71	70	65	70	66	60	66	62	56	62	58	51	59	54	42	54	49	35	50	40	31
	C	0-7	Interior	61	61	61	61	61	61	61	61	61	61	61	61	61	61	61	61	61	61	61	61	59	61	61	54	61	59	47	61	55	38	60	50	32	57	42	43	53	36	38
			Exposed	61	61	61	61	61	61	61	61	58	61	61	55	61	61	51	61	59	46	61	56	40	60	51	33	56	41	42	51	34	37	43	30	32	36	40	28	32	35	25
		7-20	Interior	61	61	61	61	61	61	61	61	61	61	61	61	61	61	61	61	61	59	61	61	57	61	60	51	61	56	39	61	51	33	57	41	29	53	34	38	46	30	34
			Exposed	61	61	61	61	61	59	61	61	55	61	61	52	61	59	45	61	55	38	61	52	34	57	41	29	52	33	37	42	29	32	34	38	28	30	34	25	41	30	22
		20-27	Interior	67	67	67	67	67	67	67	67	67	67	67	67	67	67	67	67	67	64	67	67	62	67	62	58	67	59	52	67	54	42	64	47	34	61	37	30	58	33	41
			Exposed	67	67	67	67	67	64	67	66	61	67	63	58	67	61	55	67	58	52	67	55	46	64	48	35	60	36	30	56	31	39	52	41	34	44	36	30	37	32	27
		27-45	Interior	71	71	71	71	71	71	71	71	71	71	71	71	71	71	71	71	71	68	71	71	66	70	67	62	67	63	58	64	60	53	60	56	46	56	52	37	52	44	32
			Exposed	71	71	71	71	71	68	71	70	65	71	68	62	70	65	60	67	63	57	65	61	54	60	56	46	56	51	36	51	41	31	40	34	41	34	30	36	30	41	32
	D	0-7	Interior	61	61	61	61	61	61	61	61	61	61	61	61	61	61	59	61	61	56	61	61	53	61	59	45	61	53	36	59	47	31	55	39	41	51	33	36	43	30	32
			Exposed	61	61	59	61	61	55	61	61	52	61	59	46	61	56	40	61	53	35	60	50	32	55	39	41	50	33	35	40	43	31	34	38	27	30	33	24	40	29	21
		7-20	Interior	61	61	61	61	61	61	61	61	61	61	61	60	61	61	57	61	61	53	61	60	50	61	55	37	60	48	31	55	37	41	51	32	36	41	43	32	34	38	28
			Exposed	61	61	56	61	61	52	61	59	46	61	55	39	61	52	34	60	47	31	57	40	43	51	32	36	40	42	31	33	36	27	29	32	24	38	28	21	34	25	19
		20-27	Interior	69	69	69	69	69	69	69	69	67	69	69	64	69	67	62	69	64	60	69	62	57	69	58	51	66	52	40	63	43	33	59	35	29	55	31	38	52	41	34
			Exposed	69	67	62	69	64	59	69	61	55	69	59	52	68	55	46	66	52	39	64	46	34	60	35	29	55	30	38	50	39	33	40	34	29	34	30	25	30	27	22
		27-45	Interior	72	72	72	72	72	72	72	72	71	72	72	69	72	72	66	72	69	64	71	67	61	67	62	57	63	59	52	59	54	42	54	49	35	49	40	30	40	34	41
			Exposed	72	71	66	72	68	63	70	66	60	67	63	58	65	61	54	62	59	51	60	56	45	55	49	35	48	39	30	37	33	39	32	43	34	42	38	30	38	34	27

* Cells with an astrisks indicates that the L-foot must be oriented in the Y- direction as indicated in the image.

10 Highlighted cell indicate 3-rail system span. Contact Unirac Engineering Services for support.

~~10~~ Highlighted cell with strikethrough indicate 3-rail system span and module clamp allowable capacity exceeds with 3-rails. 4-Rail system required. Contact Unirac Engineering Services for support.

UNIRAC

ASCE 7-22	II	30 ft	Ss = 3.00	23 sq.ft	PORTRAIT	CROSS-SLOPE	NXT	NXT COMBO	Stronghold BUTYL Rafter #14S
Design Standard	Risk Category	Roof Height	Seismic	Module Area	Orientation	Rail Direction	Rail Type	Clamp	Attachment

SPAN TABLES

Maximum Allowable Rail Spans for Rooftop Solar Panels Parallel to the Roof Surface (inches)

Ground Snow Load (psf)	Wind Exposure Category	Roof Tilt Angle (deg)	Panel Exposure	Basic Wind Speed (mph)																																						
				90			95			100			105			110			115			120			130			140			150			160			170			180		
				Roof Wind Zone																																						
				1	2	3	1	2	3	1	2	3	1	2	3	1	2	3	1	2	3	1	2	3	1	2	3	1	2	3	1	2	3	1	2	3	1	2	3	1	2	3
30	B	0-7	Interior	54	54	54	54	54	54	54	54	54	54	54	54	54	54	54	54	54	54	54	54	54	54	54	54	54	54	54	54	54	54	54	54	52	54	54	44	54	54	37
			Exposed	54	54	54	54	54	54	54	54	54	54	54	54	54	54	54	54	54	54	54	54	54	54	54	52	54	54	43	54	53	35	54	47	31	54	39	41	51	34	36
		7-20	Interior	55	55	55	55	55	55	55	55	55	55	55	55	55	55	55	55	55	55	55	55	55	55	55	55	55	55	55	55	55	53	55	55	46	55	54	37	54	50	32
			Exposed	55	55	55	55	55	55	55	55	55	55	55	55	55	55	55	55	55	55	55	55	55	55	55	46	55	54	36	55	46	31	55	37	41	51	32	36	41	28	32
		20-27	Interior	61	61	61	61	61	61	61	61	61	61	61	61	61	61	61	61	61	61	61	61	61	61	61	61	61	61	61	61	61	60	61	61	55	61	57	51	61	53	41
			Exposed	61	61	61	61	61	61	61	61	61	61	61	61	61	61	61	61	61	61	61	61	61	61	61	56	61	57	50	61	52	39	61	42	33	59	35	29	56	31	39
		27-45	Interior	65	65	65	65	65	65	65	65	65	65	65	65	65	65	65	65	65	65	65	65	65	65	65	65	65	65	65	65	65	63	63	63	60	61	61	57	59	59	52
			Exposed	65	65	65	65	65	65	65	65	65	65	65	65	65	65	65	65	65	65	65	65	65	65	65	60	65	62	56	62	58	51	59	54	42	54	49	35	50	40	31
	C	0-7	Interior	54	54	54	54	54	54	54	54	54	54	54	54	54	54	54	54	54	54	54	54	54	54	54	54	54	54	47	54	54	38	54	50	32	54	42	43	53	36	38
			Exposed	54	54	54	54	54	54	54	54	54	54	54	54	54	54	51	54	54	46	54	54	40	54	51	33	54	41	42	51	34	37	43	30	32	36	40	28	32	35	25
		7-20	Interior	55	55	55	55	55	55	55	55	55	55	55	55	55	55	55	55	55	55	55	55	55	55	55	51	55	55	39	54	51	33	53	41	29	52	34	38	46	30	34
			Exposed	55	55	55	55	55	55	55	55	55	55	55	52	55	55	45	55	55	38	55	52	34	55	41	29	52	33	37	42	29	32	34	38	28	30	34	25	41	30	22
		20-27	Interior	61	61	61	61	61	61	61	61	61	61	61	61	61	61	61	61	61	61	61	61	61	61	61	52	61	54	42	60	47	34	58	37	30	57	33	41			
			Exposed	61	61	61	61	61	61	61	61	61	61	61	58	61	61	55	61	58	52	61	55	46	61	48	35	60	36	30	56	31	39	52	41	34	44	36	30	37	32	27
		27-45	Interior	65	65	65	65	65	65	65	65	65	65	65	65	65	65	65	65	65	65	65	65	65	64	64	62	62	62	58	59	59	53	57	56	46	55	52	37	52	44	32
			Exposed	65	65	65	65	65	65	65	65	65	65	65	62	65	65	60	65	63	57	65	61	54	60	56	46	56	51	36	51	41	31	40	34	41	34	30	36	30	41	32
	D	0-7	Interior	54	54	54	54	54	54	54	54	54	54	54	54	54	54	54	54	54	54	54	54	53	54	54	45	54	53	36	54	47	31	54	39	41	51	33	36	43	30	32
			Exposed	54	54	54	54	54	54	54	54	52	54	54	46	54	54	40	54	53	35	54	50	32	54	39	41	50	33	35	40	43	31	34	38	27	30	33	24	40	29	21
		7-20	Interior	55	55	55	55	55	55	55	55	55	55	55	55	55	55	55	55	55	53	55	55	50	55	55	37	54	48	31	53	37	41	51	32	36	41	43	32	34	38	28
			Exposed	55	55	55	55	55	52	55	55	46	55	55	39	55	52	34	55	47	31	55	40	43	51	32	36	40	42	31	33	36	27	29	32	24	38	28	21	34	25	19
		20-27	Interior	63	63	63	63	63	63	63	63	63	63	63	63	63	63	62	63	63	60	63	62	57	63	58	51	63	52	40	61	43	33	59	35	29	55	31	38	52	41	34
			Exposed	63	63	62	63	63	59	63	61	55	63	59	52	63	55	46	63	52	39	63	46	34	60	35	29	55	30	38	50	39	33	40	34	29	34	30	25	30	27	22
		27-45	Interior	67	67	67	67	67	67	67	67	67	67	67	67	67	67	66	67	67	64	65	65	61	63	62	57	60	59	52	57	54	42	54	49	35	49	40	30	40	34	41
			Exposed	67	67	66	67	67	63	67	66	60	67	63	58	65	61	54	62	59	51	60	56	45	55	49	35	48	39	30	37	33	39	32	43	34	42	38	30	38	34	27
40	B	0-7	Interior	52	52	52	52	52	52	52	52	52	52	52	52	52	52	52	52	52	52	52	52	52	52	52	52	52	52	52	52	52	52	52	52	52	52	52	44	52	52	37
			Exposed	52	52	52	52	52	52	52	52	52	52	52	52	52	52	52	52	52	52	52	52	52	52	52	52	52	52	43	52	52	35	52	47	31	52	39	41	51	34	36
		7-20	Interior	53	53	53	53	53	53	53	53	53	53	53	53	53	53	53	53	53	53	53	53	53	53	53	53	53	53	53	53	53	53	53	53	46	53	53	37	52	50	32
			Exposed	53	53	53	53	53	53	53	53	53	53	53	53	53	53	53	53	53	53	53	53	53	53	53	46	53	53	36	53	46	31	53	37	41	51	32	36	41	28	32
		20-27	Interior	56	56	56	56	56	56	56	56	56	56	56	56	56	56	56	56	56	56	56	56	56	56	56	56	56	56	56	56	56	56	56	56	55	56	56	51	56	53	41
			Exposed	56	56	56	56	56	56	56	56	56	56	56	56	56	56	56	56	56	56	56	56	56	56	56	56	56	56	50	56	52	39	56	42	33	56	35	29	56	31	39
		27-45	Interior	61	61	61	61	61	61	61	61	61	61	61	61	61	61	61	61	61	61	61	61	61	61	61	61	61	61	61	60	60	60	58	58	58	57	57	57	55	55	52
			Exposed	61	61	61	61	61	61	61	61	61	61	61	61	61	61	61	61	61	61	61	61	60	61	61	61	61	61	56	60	58	51	58	54	42	54	49	35	50	40	31
	C	0-7	Interior	52	52	52	52	52	52	52	52	52	52	52	52	52	52	52	52	52	52	52	52	52	52	52	52	52	52	47	52	52	38	52	50	32	52	42	43	52	36	38
			Exposed	52	52	52	52	52	52	52	52	52	52	52	52	52	52	51	52	52	46	52	52	40	52	51	33	52	41	42	51	34	37	43	30	32	36	40	28	32	35	25
		7-20	Interior	53	53	53	53	53	53	53	53	53	53	53	53	53	53	53	53	53	53	53	53	53	53	53	51	53	53	39	52	51	33	51	41	29	50	34	38	46	30	34
			Exposed	53	53	53	53	53	53	53	53	53	53	53	52	53	53	45	53	53	38	53	52	34	53	41	29	52	33	37	42	29	32	34	38	28	30	34	25	41	30	22
		20-27	Interior	56	56	56	56	56	56	56	56	56	56	56	56	56	56	56	56	56	56	56	56	56	56	56	52	56	54	42	55	47	34	54	37	30	53	33	41			
			Exposed	56	56	56	56	56	56	56	56	56	56	56	56	56	56	55	56	56	52	56	55	46	56	48	35	56	36	30	56	31	39	52	41	34	44	36	30	37	32	27
		27-45	Interior	61	61	61	61	61	61	61	61	61	61	61	61	61	61	61	61	61	61	61	61	61	59	59	59	57	57	57	56	56	53	54	54	46	52	52	37	50	44	32
			Exposed	61	61	61	61	61	61	61	61	61	61	61	61	61	61	60	61	61	57	61	61	54	59	56	46	56	51	36	51	41	31	40	34	41	34	30	36	30	41	32
	D	0-7	Interior	54	54	54	54	54	54	54	54	54	54	54	54	54	54	54	54	54	54	54	54	53	54	54	45	54	53	36	54	47	31	54	39	41	51	33	36	43	30	32
			Exposed	54	54	54	54	54	54	54	54	52	54	54	46	54	54	40	54	53	35	54	50	32	54	39	41	50	33	35	40	43	31	34	38	27	30	33	24	40	29	21
		7-20	Interior	54	54	54	54	54	54	54	54	54	54	54	54	54	54	54	54	54	53	54	54	50	54	54	37	54	48	31	53	37	41	51	32	36	41	43	32	34	38	28
			Exposed	54	54	54	54	54	52	54	54	46	54	54	39	54	52	34	54	47	31	54	40	43	51	32	36	40	42	31	33	36	27	29	32	24	38	28	21	34	25	19
		20-27	Interior	58	58	58	58	58	58	58	58	58	58	58	58	58	58	58	58	58	58	58	58	57	58	58	51	58	52	40	56	43	33	55	35	29	53	31	38	52	41	34
			Exposed	58	58	58	58	58	58	58	58	55	58	58	52	58	55	46	58	52	39	58	46	34	58	35	29	55	30	38	50	39	33	40	34	29	34	30	25	30	27	22
		27-45	Interior	62	62	62	62	62	62	62	62	62	62	62	62	62	62	62	62	62	62	61	61	61	59	59	57	56	56	52	54	54	42	52	49	35	49	40	30	40	34	41
			Exposed	62	62	62	62	62	62	62	62	60	62	62	58	62	61	54	62	59	51	60	56	45	55	49	35	48	39	30	37	33	39	32	43	34	42	38	30	38	34	27
50	B	0-7	Interior	48	48	48	48	48	48	48	48	48	48	48	48	48	48	48	48	48	48	48	48	48	48	48	48	48	48	48	48	48	48	48	48	48	48	48	44	48	48	37
			Exposed	48	48	48	48	48	48	48	48	48	48	48	48	48	48	48	48	48	48	48	48	48	48	48	48	48	48	43	48	48	35	48	47	31	48	39	41	48	34	36
		7-20	Interior	49	49	49	49	49	49	49	49	49	49	49	49	49	49	49	49	49	49	49	49	49	49	49	49	49	49	49	49	49	49	49	49	46	49	49	37	48	48	32
			Exposed	49	49	49	49	49	49	49	49	49	49	49	49	49	49	49	49	49	49	49	49	49	49	49	46	49	49	36	49	46	31	49	37	41	49	32	36	41	28	32
		20-27	Interior	53	53	53	53	53	53	53	53	53	53	53	53	53	53	53	53	53	53	53	53	53	53	53	53	53	53	53	53	53	53	53	53	53	53	53	51	52	52	41
			Exposed	53	53	53	53	53	53	53	53	53	53	53	53	53	53	53	53	53	53	53	53	53	53	53	53	53	53	50	53	52	39	53	42	33	53	35	29	52	31	39
		27-45	Interior	62*	62*	62*	62*	62*	62*	62*	62*	62*	62*	62*	62*	62*	62*	62*	62*	62*	62*	62*	62*	62*	62*	62*	62*	62*	62*	62*	61*	61*	61*	62*	62*	55	54	54	54	52	52	52
			Exposed	62*	62*	62*	62*	62*	62*	62*	62*	62*	62*	62*	62*	62*	62*	62*	62*	62*	62*	62*	62*	62*	62*	62*	61*	62*	62*	56	61*	56	51	55	54	42	54	49	35	50	40	31
	C	0-7	Interior	48	48	48	48	48	48	48	48	48	48	48	48	48	48	48	48	48	48	48	48	48	48	48	48	48	48	47	48	48	38	48	48	32	48	42	43	48	36	38
			Exposed	48	48	48	48	48	48	48	48	48	48	48	48	48	48	48	48	48	46	48	48	40	48	48	33	48	41	42	48	34	37	43	30	32	36	40	28	32	35	25
		7-20	Interior	49	49	49	49	49	49	49	49	49	49	49	49	49	49	49	49	49	49	49	49	49	49	49	49	49	49	39	48	48	33	48	41	29	47	34	38	46	30	34
			Exposed	49	49	49	49	49	49	49	49	49	49	49	49	49	49	45	49	49	38	49	49	34	49	41	29	49	33	37	42	29	32	34	38	28	30	34	25	41	30	22
		20-27	Interior	53	53	53	53	53	53	53	53	53	53	53	53	53	53	53	53	53	53	53	53	53	53	53	52	53	53	52	52	52	42	51	47	34	50	37	30	49	33	41
			Exposed	53	53	53	53	53	53	53	53	53	53	53	53	53	53	53	53	53	52	53	53	46	53	48	35	53	36	30	52	31	39	51	41	34	44	36	30	37	32	27
		27-45	Interior	62*	62*	62*	62*	62*	62*	62*	62*	62*	62*	62*	62*	62*	62*	62*	62*	62*	62*	62*	62*	62*	62*	62*	62*	62*	62*	54	54	54	52	52	52	46	49	49	37	48	44	32
			Exposed	62*	62*	62*	62*	62*	62*	62*	62*	62*	62*	62*	62*	62*	62*	57	62*	62*	57	62*	61*	54	56	56	46	54	51	36	51	41	31	40	34	41	34	30	36	30	41	32
	D	0-7	Interior	50	50	50	50	50	50	50	50	50	50	50	50	50	50	50	50	50	50	50	50	50	50	50	45	50	50	36	50	47	31	50	39	41	50	33	36	43	30	32
			Exposed	50	50	50	50	50	50	50	50	50	50	50	46	50	50	40	50	50	35	50	50	32	50	39	41	50	33	35	40	43	31	34	38	27	30	33	24	40	29	21
		7-20	Interior	51	51	51	51	51	51	51	51	51	51	51	51	51	51	51	51	51	51	51	51	50	51	51	37	50	48	31	49	37	41	48	32	36	41	43	32	34	38	28
			Exposed	51	51	51	51	51	51	51	51	46	51	51	39	51	51	34	51	47	31	51	40	43	51	32	36	40	42	31	33	36	27	29	32	24	38	28	21	34	25	19
		20-27	Interior	54	54	54	54	54	54	54	54	54	54	54	54	54	54	54	54	54	54	54	54	54	54	54	51	54	52	40	53	43	33	51	35	29	50	31	38	49	41	34
			Exposed	54	54	54	54	54	54	54	54	54	54	54	52	54	54	46	54	52	39	54	46	34	54	35	29	54	30	38	50	39	33	40	34	29	34	30	25	30	27	22
		27-45	Interior	59	59	59	59	59	59	59	59	59	59	59	59	59	59	59	58	58	58	57	57	57	55	55	55	53	53	52	52	52	42	50	49	35	48	40	30	40	34	41
			Exposed	59	59	59	59	59	59	59	59	59	59	59	58	59	59	54	58	58	51	57	56	45	55	49	35	48	39	30	37	33	39	32	43	34	42	38	30	38	34	27

* Cells with an astrisks indicates that the L-foot must be oriented in the Y- direction as indicated in the image.

10 Highlighted cell indicate 3-rail system span. Contact Unirac Engineering Services for support.

~~10~~ Highlighted cell with strikethrough indicate 3-rail system span and module clamp allowable capacity exceeds with 3-rails. 4-Rail system required. Contact Unirac Engineering Services for support.

UNIRAC

ASCE 7-22	II	30 ft	Ss = 3.00	23 sq.ft	PORTRAIT	CROSS-SLOPE	NXT	NXT COMBO	Stronghold BUTYL Rafter #14S
Design Standard	Risk Category	Roof Height	Seismic	Module Area	Orientation	Rail Direction	Rail Type	Clamp	Attachment

SPAN TABLES

Maximum Allowable Rail Spans for Rooftop Solar Panels Parallel to the Roof Surface (inches)

Ground Snow Load (psf)	Wind Exposure Category	Roof Tilt Angle (deg)	Panel Exposure	Basic Wind Speed (mph)																																						
				90			95			100			105			110			115			120			130			140			150			160			170			180		
				Roof Wind Zone																																						
				1	2	3	1	2	3	1	2	3	1	2	3	1	2	3	1	2	3	1	2	3	1	2	3	1	2	3	1	2	3	1	2	3	1	2	3	1	2	3
60	B	0-7	Interior	45	45	45	45	45	45	45	45	45	45	45	45	45	45	45	45	45	45	45	45	45	45	45	45	45	45	45	45	45	45	45	45	45	45	45	44	45	45	37
			Exposed	45	45	45	45	45	45	45	45	45	45	45	45	45	45	45	45	45	45	45	45	45	45	45	45	45	45	43	45	45	35	45	45	31	45	39	41	45	34	36
		7-20	Interior	45	45	45	45	45	45	45	45	45	45	45	45	45	45	45	45	45	45	45	45	45	45	45	45	45	45	45	45	45	45	45	45	45	45	45	37	45	45	32
			Exposed	45	45	45	45	45	45	45	45	45	45	45	45	45	45	45	45	45	45	45	45	45	45	45	45	45	45	36	45	45	31	45	37	41	45	32	36	41	28	32
		20-27	Interior	50	50	50	50	50	50	50	50	50	50	50	50	50	50	50	50	50	50	50	50	50	50	50	50	50	50	50	50	50	50	50	50	50	50	50	50	49	49	41
			Exposed	50	50	50	50	50	50	50	50	50	50	50	50	50	50	50	50	50	50	50	50	50	50	50	50	50	50	50	50	50	39	50	42	33	50	35	29	49	31	39
		27-45	Interior	54*	54*	54*	54*	54*	54*	54*	54*	54*	54*	54*	54*	54*	54*	54*	54*	54*	54*	54*	54*	54*	54*	54*	54*	54*	54*	54*	53*	53*	53*	52*	52*	52*	53*	53*	53*	52*	52*	52*
			Exposed	54*	54*	54*	54*	54*	54*	54*	54*	54*	54*	54*	54*	54*	54*	54*	54*	54*	54*	54*	54*	54*	54*	54*	54*	54*	54*	54*	53*	53*	51	52*	52*	42	53*	49	35	50	40	31
	C	0-7	Interior	45	45	45	45	45	45	45	45	45	45	45	45	45	45	45	45	45	45	45	45	45	45	45	45	45	45	45	45	45	38	45	45	32	45	42	43	45	36	38
			Exposed	45	45	45	45	45	45	45	45	45	45	45	45	45	45	45	45	45	45	45	45	40	45	45	33	45	41	42	45	34	37	43	30	32	36	40	28	32	35	25
		7-20	Interior	45	45	45	45	45	45	45	45	45	45	45	45	45	45	45	45	45	45	45	45	45	45	45	45	45	45	39	45	45	33	45	41	29	44	34	38	43	30	34
			Exposed	45	45	45	45	45	45	45	45	45	45	45	45	45	45	45	45	45	38	45	45	34	45	41	29	45	33	37	42	29	32	34	38	28	30	34	25	41	30	22
		20-27	Interior	50	50	50	50	50	50	50	50	50	50	50	50	50	50	50	50	50	50	50	50	50	50	50	50	50	50	50	49	49	42	48	47	34	47	37	30	46	33	41
			Exposed	50	50	50	50	50	50	50	50	50	50	50	50	50	50	50	50	50	50	50	50	46	50	48	35	50	36	30	49	31	39	48	41	34	44	36	30	37	32	27
		27-45	Interior	54*	54*	54*	54*	54*	54*	54*	54*	54*	54*	54*	54*	54*	54*	54*	54*	54*	54*	54*	54*	54*	53*	53*	53*	53*	53*	53*	52*	52*	52*	52*	52*	46	54*	47	37	46	44	32
			Exposed	54*	54*	54*	54*	54*	54*	54*	54*	54*	54*	54*	54*	54*	54*	54*	54*	54*	54*	54*	54*	54*	53*	53*	46	53*	51	36	50	41	31	40	34	41	34	30	36	30	41	32
	D	0-7	Interior	47	47	47	47	47	47	47	47	47	47	47	47	47	47	47	47	47	47	47	47	47	47	47	47	47	47	36	47	47	31	47	39	41	47	33	36	43	30	32
			Exposed	47	47	47	47	47	47	47	47	47	47	47	46	47	47	40	47	47	35	47	47	32	47	39	41	47	33	35	40	43	31	34	38	27	30	33	24	40	29	21
		7-20	Interior	47	47	47	47	47	47	47	47	47	47	47	47	47	47	47	47	47	47	47	47	47	47	47	37	47	47	31	46	37	41	45	32	36	41	43	32	34	38	28
			Exposed	47	47	47	47	47	47	47	47	46	47	47	39	47	47	34	47	47	31	47	40	43	47	32	36	40	42	31	33	36	27	29	32	24	38	28	21	34	25	19
		20-27	Interior	51	51	51	51	51	51	51	51	51	51	51	51	51	51	51	51	51	51	51	51	51	51	51	51	51	51	40	50	43	33	49	35	29	48	31	38	46	41	34
			Exposed	51	51	51	51	51	51	51	51	51	51	51	51	51	51	46	51	51	39	51	46	34	51	35	29	51	30	38	50	39	33	40	34	29	34	30	25	30	27	22
		27-45	Interior	58*	58*	58*	58*	58*	58*	58*	58*	58*	58*	58*	58*	58*	58*	58*	57*	57*	57*	59*	59*	59*	57*	57*	57*	51	51	51	49	49	42	48	48	35	46	40	30	40	34	41
			Exposed	58*	58*	58*	58*	58*	58*	58*	58*	58*	58*	58*	58*	58*	54	57*	57*	51	59*	54	45	53	49	35	48	39	30	37	33	39	32	43	34	42	38	30	38	34	27
70	B	0-7	Interior	41	41	41	41	41	41	41	41	41	41	41	41	41	41	41	41	41	41	41	41	41	41	41	41	41	41	41	41	41	41	41	41	41	41	41	41	41	41	37
			Exposed	41	41	41	41	41	41	41	41	41	41	41	41	41	41	41	41	41	41	41	41	41	41	41	41	41	41	41	41	41	35	41	41	31	41	39	41	41	34	36
		7-20	Interior	42	42	42	42	42	42	42	42	42	42	42	42	42	42	42	42	42	42	42	42	42	42	42	42	42	42	42	42	42	42	42	42	42	42	42	37	42	42	32
			Exposed	42	42	42	42	42	42	42	42	42	42	42	42	42	42	42	42	42	42	42	42	42	42	42	42	42	42	36	42	42	31	42	37	41	42	32	36	41	28	32
		20-27	Interior	49*	49*	49*	49*	49*	49*	49*	49*	49*	49*	49*	49*	49*	49*	49*	49*	49*	49*	49*	49*	49*	49*	49*	49*	49*	49*	49*	49*	49*	49*	49*	49*	49*	49*	49*	49*	49*	49*	41
			Exposed	49*	49*	49*	49*	49*	49*	49*	49*	49*	49*	49*	49*	49*	49*	49*	49*	49*	49*	49*	49*	49*	49*	49*	49*	49*	49*	49*	49*	49*	39	49*	42	33	49*	35	29	49*	31	39
		27-45	Interior	51*	51*	51*	51*	51*	51*	51*	51*	51*	51*	51*	51*	51*	51*	51*	51*	51*	51*	51*	51*	51*	51*	51*	51*	51*	51*	51*	50*	50*	50*	49*	49*	49*	48*	48*	48*	47*	47*	47*
			Exposed	51*	51*	51*	51*	51*	51*	51*	51*	51*	51*	51*	51*	51*	51*	51*	51*	51*	51*	51*	51*	51*	51*	51*	51*	51*	51*	51*	50*	50*	50*	49*	49*	42	48*	48*	35	47*	40	31
	C	0-7	Interior	41	41	41	41	41	41	41	41	41	41	41	41	41	41	41	41	41	41	41	41	41	41	41	41	41	41	41	41	41	38	41	41	32	41	41	43	41	36	38
			Exposed	41	41	41	41	41	41	41	41	41	41	41	41	41	41	41	41	41	41	41	41	40	41	41	33	41	41	42	41	34	37	41	30	32	36	40	28	32	35	25
		7-20	Interior	42	42	42	42	42	42	42	42	42	42	42	42	42	42	42	42	42	42	42	42	42	42	42	42	42	42	39	42	42	33	42	41	29	42	34	38	41	30	34
			Exposed	42	42	42	42	42	42	42	42	42	42	42	42	42	42	42	42	42	38	42	42	34	42	41	29	42	33	37	42	29	32	34	38	28	30	34	25	41	30	22
		20-27	Interior	49*	49*	49*	49*	49*	49*	49*	49*	49*	49*	49*	49*	49*	49*	49*	49*	49*	49*	49*	49*	49*	49*	49*	49*	49*	49*	49*	49*	49*	42	48*	47*	34	47*	37	30	44	33	41
			Exposed	49*	49*	49*	49*	49*	49*	49*	49*	49*	49*	49*	49*	49*	49*	49*	49*	49*	49*	49*	49*	46	49*	48*	35	49*	36	30	49*	31	39	48*	41	34	44	36	30	37	32	27
		27-45	Interior	51*	51*	51*	51*	51*	51*	51*	51*	51*	51*	51*	51*	51*	51*	51*	51*	51*	51*	51*	51*	51*	50*	50*	50*	49*	49*	49*	48*	48*	48*	46*	46*	46*	47*	47*	37	45*	44	32
			Exposed	51*	51*	51*	51*	51*	51*	51*	51*	51*	51*	51*	51*	51*	51*	51*	51*	51*	51*	51*	51*	45	50*	50*	35	48*	39	36	37	33	39	40	34	41	34	30	36	30	41	32
	D	0-7	Interior	44	44	44	44	44	44	44	44	44	44	44	44	44	44	44	44	44	44	44	44	44	44	44	44	44	44	36	44	44	31	44	39	41	44	33	36	43	30	32
			Exposed	44	44	44	44	44	44	44	44	44	44	44	44	44	40	44	44	35	44	44	32	44	39	41	44	33	35	40	43	31	34	38	27	30	33	24	40	29	21
		7-20	Interior	44	44	44	44	44	44	44	44	44	44	44	44	44	44	44	44	44	44	44	44	44	44	44	37	44	44	31	44	37	41	43	32	36	41	43	32	34	38	28
			Exposed	44	44	44	44	44	44	44	44	44	44	44	39	44	44	34	44	44	31	44	40	43	44	32	36	40	42	31	33	36	27	29	32	24	38	28	21	34	25	19
		20-27	Interior	49	49	49	49	49	49	49	49	49	49	49	49	49	49	49	49	49	49	49	49	49	49	49	49	48	48	40	47	43	33	46	35	29	45	31	38	44	41	34
			Exposed	49	49	49	49	49	49	49	49	49	49	49	49	49	46	49	49	39	49	46	34	49	35	29	48	30	38	47	39	33	40	34	29	34	30	25	30	27	22
		27-45	Interior	53*	53*	53*	53*	53*	53*	53*	53*	53*	53*	53*	53*	53*	53*	53*	52*	52*	52*	52*	52*	52*	50*	50*	50*	51*	51*	51*	49*	49*	42	51*	46	35	44	40	30	40	34	41
			Exposed	53*	53*	53*	53*	53*	53*	53*	53*	53*	53*	53*	53*	53*	53*	53*	52*	52*	51*	52*	52*	45	50*	50*	35	48	39	30	37	33	39	32	43	34	42	38	30	38	34	27
80	B	0-7	Interior	39	39	39	39	39	39	39	39	39	39	39	39	39	39	39	39	39	39	39	39	39	39	39	39	39	39	39	39	39	39	39	39	39	39	39	39	39	39	37
			Exposed	39	39	39	39	39	39	39	39	39	39	39	39	39	39	39	39	39	39	39	39	39	39	39	39	39	39	39	39	39	35	39	39	31	39	39	41	39	34	36
		7-20	Interior	39	39	39	39	39	39	39	39	39	39	39	39	39	39	39	39	39	39	39	39	39	39	39	39	39	39	39	39	39	39	39	39	39	39	39	37	39	39	32
			Exposed	39	39	39	39	39	39	39	39	39	39	39	39	39	39	39	39	39	39	39	39	39	39	39	39	39	39	36	39	39	31	39	37	41	39	32	36	39	28	32
		20-27	Interior	46*	46*	46*	46*	46*	46*	46*	46*	46*	46*	46*	46*	46*	46*	46*	46*	46*	46*	46*	46*	46*	46*	46*	46*	46*	46*	46*	46*	46*	46*	46*	46*	46*	46*	46*	46*	46*	46*	41
			Exposed	46*	46*	46*	46*	46*	46*	46*	46*	46*	46*	46*	46*	46*	46*	46*	46*	46*	46*	46*	46*	46*	46*	46*	46*	46*	46*	46*	46*	46*	39	46*	42*	33	46*	35	29	46*	31	39
		27-45	Interior	49*	49*	49*	49*	49*	49*	49*	49*	49*	49*	49*	49*	49*	49*	49*	49*	49*	49*	49*	49*	49*	49*	49*	49*	49*	49*	49*	48*	48*	48*	47*	47*	47*	46*	46*	46*	45*	45*	45*
			Exposed	49*	49*	49*	49*	49*	49*	49*	49*	49*	49*	49*	49*	49*	49*	49*	49*	49*	49*	49*	49*	49*	49*	49*	49*	49*	49*	49*	48*	48*	48*	47*	47*	42*	46*	46*	35	45*	41*	31
	C	0-7	Interior	39	39	39	39	39	39	39	39	39	39	39	39	39	39	39	39	39	39	39	39	39	39	39	39	39	39	39	39	39	38	39	39	32	39	39	43	39	36	38
			Exposed	39	39	39	39	39	39	39	39	39	39	39	39	39	39	39	39	39	39	39	39	39	39	39	39	39	39	42	39	34	37	39	30	32	36	40	28	32	35	25
		7-20	Interior	39	39	39	39	39	39	39	39	39	39	39	39	39	39	39	39	39	39	39	39	39	39	39	39	39	39	39	39	39	33	39	39	29	39	34	38	39	30	34
			Exposed	39	39	39	39	39	39	39	39	39	39	39	39	39	39	39	39	39	38	39	39	34	39	39	29	39	33	37	39	29	32	34	38	28	30	34	25	41	30	22
		20-27	Interior	46*	46*	46*	46*	46*	46*	46*	46*	46*	46*	46*	46*	46*	46*	46*	46*	46*	46*	46*	46*	46*	46*	46*	46*	46*	46*	46*	46*	46*	42*	46*	46*	34	45*	37	30	44*	33	41
			Exposed	46*	46*	46*	46*	46*	46*	46*	46*	46*	46*	46*	46*	46*	46*	46*	46*	46*	46*	46*	46*	46*	46*	46*	35	46*	36	30	46*	31	39	46*	41	34	44*	36	30	37	32	27
		27-45	Interior	49*	49*	49*	49*	49*	49*	49*	49*	49*	49*	49*	49*	49*	49*	49*	49*	49*	49*	49*	49*	49*	48*	48*	48*	47*	47*	47*	46*	46*	46*	44*	44*	44*	43*	43*	37	42*	42*	32
			Exposed	49*	49*	49*	49*	49*	49*	49*	49*	49*	49*	49*	49*	49*	49*	49*	49*	49*	49*	49*	49*	49*	48*	48*	46*	47*	47*	36	46*	41*	31	41*	34	41	34	30	36	30	41	32
	D	0-7	Interior	41	41	41	41	41	41	41	41	41	41	41	41	41	41	41	41	41	41	41	41	41	41	41	41	41	41	36	41	41	31	41	39	41	41	33	36	41	30	32
			Exposed	41	41	41	41	41	41	41	41	41	41	41	41	41	40	41	41	35	41	41	32	41	39	41	41	33	35	40	43	31	34	38	27	30	33	24	40	29	21
		7-20	Interior	41	41	41	41	41	41	41	41	41	41	41	41	41	41	41	41	41	41	41	41	41	41	41	37	41	41	31	41	37	41	41	32	36	40	43	32	34	38	28
			Exposed	41	41	41	41	41	41	41	41	41	41	41	39	41	41	34	41	41	31	41	40	43	41	32	36	40	42	31	33	36	27	29	32	24	38	28	21	34	25	19
		20-27	Interior	48*	48*	48*	48*	48*	48*	48*	48*	48*	48*	48*	48*	48*	48*	48*	48*	48*	48*	48*	48*	48*	48*	48*	48*	48*	48*	40	47*	43	33	46*	35	29	43	31	38	42	41	34
			Exposed	48*	48*	48*	48*	48*	48*	48*	48*	48*	48*	48*	48*	48*	46*	48*	48*	39	48*	46*	34	48*	35	29	48*	30	38	47*	39	33	40	34	29	34	30	25	30	27	22
		27-45	Interior	51*	51*	51*	51*	51*	51*	51*	51*	51*	51*	51*	51*	51*	51*	51*	50*	50*	50*	49*	49*	49*	48*	48*	48*	47*	47*	47*	46*	46*	42	44*	44*	35	44*	40	30	40	34	41
			Exposed	51*	51*	51*	51*	51*	51*	51*	51*	51*	51*	51*	51*	51*	51*	51*	50*	50*	50*	49*	49*	45*	48*	48*	35	47*	39	30	37	33	39	32	43	34	42	38	30	38	34	27

* Cells with an astrisks indicates that the L-foot must be oriented in the Y- direction as indicated in the image.

10 Highlighted cell indicate 3-rail system span. Contact Unirac Engineering Services for support.

~~10~~ Highlighted cell with strikethrough indicate 3-rail system span and module clamp allowable capacity exceeds with 3-rails. 4-Rail system required. Contact Unirac Engineering Services for support.

UNIRAC

ASCE 7-22	II	30 ft	Ss = 3.00	23 sq.ft	PORTRAIT	CROSS-SLOPE	NXT	NXT COMBO	Stronghold BUTYL Rafter #14S
Design Standard	Risk Category	Roof Height	Seismic	Module Area	Orientation	Rail Direction	Rail Type	Clamp	Attachment

SPAN TABLES

Maximum Allowable Rail Spans for Rooftop Solar Panels Parallel to the Roof Surface (inches)

Ground Snow Load (psf)	Wind Exposure Category	Roof Tilt Angle (deg)	Panel Exposure	Basic Wind Speed (mph)																																						
				90			95			100			105			110			115			120			130			140			150			160			170			180		
				Roof Wind Zone																																						
				1	2	3	1	2	3	1	2	3	1	2	3	1	2	3	1	2	3	1	2	3	1	2	3	1	2	3	1	2	3	1	2	3	1	2	3	1	2	3
90	B	0-7	Interior	37	37	37	37	37	37	37	37	37	37	37	37	37	37	37	37	37	37	37	37	37	37	37	37	37	37	37	37	37	37	37	37	37	37	37	37	37	37	37
			Exposed	37	37	37	37	37	37	37	37	37	37	37	37	37	37	37	37	37	37	37	37	37	37	37	37	37	37	37	37	37	35	37	37	31	37	37	41	37	34	36
		7-20	Interior	37	37	37	37	37	37	37	37	37	37	37	37	37	37	37	37	37	37	37	37	37	37	37	37	37	37	37	37	37	37	37	37	37	37	37	37	37	37	32
			Exposed	37	37	37	37	37	37	37	37	37	37	37	37	37	37	37	37	37	37	37	37	37	37	37	37	37	37	36	37	37	31	37	37	41	37	32	36	37	28	32
		20-27	Interior	41*	41*	41*	41*	41*	41*	41*	41*	41*	41*	41*	41*	41*	41*	41*	41*	41*	41*	41*	41*	41*	41*	41*	41*	41*	41*	41*	41*	41*	41*	41*	41*	41*	41*	41*	41*	41*	41*	41*
			Exposed	41*	41*	41*	41*	41*	41*	41*	41*	41*	41*	41*	41*	41*	41*	41*	41*	41*	41*	41*	41*	41*	41*	41*	41*	41*	41*	41*	41*	41*	39*	41*	41*	33	41*	35	29	41*	31	39
		27-45	Interior	44*	44*	44*	44*	44*	44*	44*	44*	44*	44*	44*	44*	44*	44*	44*	44*	44*	44*	44*	44*	44*	44*	44*	44*	44*	44*	44*	44*	44*	44*	44*	44*	44*	44*	44*	44*	44*	44*	44*
			Exposed	44*	44*	44*	44*	44*	44*	44*	44*	44*	44*	44*	44*	44*	44*	44*	44*	44*	44*	44*	44*	44*	44*	44*	44*	44*	44*	44*	44*	44*	44*	44*	44*	42*	44*	44*	35	44*	40*	31
	C	0-7	Interior	37	37	37	37	37	37	37	37	37	37	37	37	37	37	37	37	37	37	37	37	37	37	37	37	37	37	37	37	37	37	37	37	32	37	37	43	37	36	38
			Exposed	37	37	37	37	37	37	37	37	37	37	37	37	37	37	37	37	37	37	37	37	37	37	37	37	37	37	37	37	37	37	37	30	32	36	40	28	32	35	25
		7-20	Interior	37	37	37	37	37	37	37	37	37	37	37	37	37	37	37	37	37	37	37	37	37	37	37	37	37	37	37	37	37	33	37	37	29	37	34	38	37	30	34
			Exposed	37	37	37	37	37	37	37	37	37	37	37	37	37	37	37	37	37	37	37	37	34	37	37	29	37	33	37	37	29	32	34	38	28	30	34	25	41	30	22
		20-27	Interior	41*	41*	41*	41*	41*	41*	41*	41*	41*	41*	41*	41*	41*	41*	41*	41*	41*	41*	41*	41*	41*	41*	41*	41*	41*	41*	41*	41*	41*	41*	41*	41*	34	41*	37	30	40*	33	41
			Exposed	41*	41*	41*	41*	41*	41*	41*	41*	41*	41*	41*	41*	41*	41*	41*	41*	41*	41*	41*	41*	41*	41*	41*	35	41*	36	30	41*	31	39	41*	41	34	41*	36	30	37	32	27
		27-45	Interior	44*	44*	44*	44*	44*	44*	44*	44*	44*	44*	44*	44*	44*	44*	44*	44*	44*	44*	44*	44*	44*	44*	44*	44*	44*	44*	44*	44*	44*	44*	43*	43*	43*	42*	42*	37*	41*	41*	32
			Exposed	44*	44*	44*	44*	44*	44*	44*	44*	44*	44*	44*	44*	44*	44*	44*	44*	44*	44*	44*	44*	44*	44*	44*	44*	44*	44*	36*	44*	41*	31	40*	34	41	34	30	36	30	41	32
	D	0-7	Interior	39	39	39	39	39	39	39	39	39	39	39	39	39	39	39	39	39	39	39	39	39	39	39	39	39	39	36	39	39	31	39	39	41	39	33	36	39	30	32
			Exposed	39	39	39	39	39	39	39	39	39	39	39	39	39	39	39	39	39	35	39	39	32	39	39	41	39	33	35	39	43	31	34	38	27	30	33	24	40	29	21
		7-20	Interior	39	39	39	39	39	39	39	39	39	39	39	39	39	39	39	39	39	39	39	39	39	39	39	37	39	39	31	39	37	41	39	32	36	38	43	32	34	38	28
			Exposed	39	39	39	39	39	39	39	39	39	39	39	39	39	39	34	39	39	31	39	39	43	39	32	36	39	42	31	33	36	27	29	32	24	38	28	21	34	25	19
		20-27	Interior	46*	46*	46*	46*	46*	46*	46*	46*	46*	46*	46*	46*	46*	46*	46*	46*	46*	46*	46*	46*	46*	46*	46*	46*	46*	46*	40	45*	43*	33	44*	35	29	43*	31	38	43*	41	34
			Exposed	46*	46*	46*	46*	46*	46*	46*	46*	46*	46*	46*	46*	46*	46*	46*	46*	46*	39	46*	46*	34	46*	35	29	46*	30	38	45*	39	33	40	34	29	34	30	25	30	27	22
		27-45	Interior	48*	48*	48*	48*	48*	48*	48*	48*	48*	48*	48*	48*	48*	48*	48*	48*	48*	48*	47*	47*	47*	46*	46*	46*	45*	45*	45*	44*	44*	42*	43*	43*	35	42*	40*	30	40*	34	41
			Exposed	48*	48*	48*	48*	48*	48*	48*	48*	48*	48*	48*	48*	48*	48*	48*	48*	48*	48*	47*	47*	45*	46*	46*	35	45*	39*	30	37	33	39	32	43	34	42	38	30	38	34	27
100	B	0-7	Interior	35	35	35	35	35	35	35	35	35	35	35	35	35	35	35	35	35	35	35	35	35	35	35	35	35	35	35	35	35	35	35	35	35	35	35	35	35	35	35
			Exposed	35	35	35	35	35	35	35	35	35	35	35	35	35	35	35	35	35	35	35	35	35	35	35	35	35	35	35	35	35	35	35	35	31	35	35	41	35	34	36
		7-20	Interior	35	35	35	35	35	35	35	35	35	35	35	35	35	35	35	35	35	35	35	35	35	35	35	35	35	35	35	35	35	35	35	35	35	35	35	35	35	35	32
			Exposed	35	35	35	35	35	35	35	35	35	35	35	35	35	35	35	35	35	35	35	35	35	35	35	35	35	35	35	35	35	31	35	35	41	35	32	36	35	28	32
		20-27	Interior	39*	39*	39*	39*	39*	39*	39*	39*	39*	39*	39*	39*	39*	39*	39*	39*	39*	39*	39*	39*	39*	39*	39*	39*	39*	39*	39*	39*	39*	39*	39*	39*	39*	39*	39*	39*	39*	39*	39*
			Exposed	39*	39*	39*	39*	39*	39*	39*	39*	39*	39*	39*	39*	39*	39*	39*	39*	39*	39*	39*	39*	39*	39*	39*	39*	39*	39*	39*	39*	39*	39*	39*	39*	33	39*	35*	29	39*	31	39
		27-45	Interior	40*	40*	40*	40*	40*	40*	40*	40*	40*	40*	40*	40*	40*	40*	40*	40*	40*	40*	40*	40*	40*	40*	40*	40*	40*	40*	40*	40*	40*	40*	40*	40*	40*	40*	40*	40*	40*	40*	40*
			Exposed	40*	40*	40*	40*	40*	40*	40*	40*	40*	40*	40*	40*	40*	40*	40*	40*	40*	40*	40*	40*	40*	40*	40*	40*	40*	40*	40*	40*	40*	40*	40*	40*	40*	40*	40*	35*	40*	40*	31
	C	0-7	Interior	35	35	35	35	35	35	35	35	35	35	35	35	35	35	35	35	35	35	35	35	35	35	35	35	35	35	35	35	35	35	35	35	32	35	35	43	35	35	38
			Exposed	35	35	35	35	35	35	35	35	35	35	35	35	35	35	35	35	35	35	35	35	35	35	35	33	35	35	42	35	34	37	35	30	32	35	40	28	32	35	25
		7-20	Interior	35	35	35	35	35	35	35	35	35	35	35	35	35	35	35	35	35	35	35	35	35	35	35	35	35	35	35	35	35	33	35	35	29	35	34	38	35	30	34
			Exposed	35	35	35	35	35	35	35	35	35	35	35	35	35	35	35	35	35	35	35	35	34	35	35	29	35	33	37	35	29	32	34	38	28	30	34	25	41	30	22
		20-27	Interior	39*	39*	39*	39*	39*	39*	39*	39*	39*	39*	39*	39*	39*	39*	39*	39*	39*	39*	39*	39*	39*	39*	39*	39*	39*	39*	39*	39*	39*	39*	39*	39*	34*	39*	37*	30	39*	33	41
			Exposed	39*	39*	39*	39*	39*	39*	39*	39*	39*	39*	39*	39*	39*	39*	39*	39*	39*	39*	39*	39*	39*	39*	39*	35*	39*	36*	30	39*	31	39	39*	41	34	39*	36	30	37*	32	27
		27-45	Interior	40*	40*	40*	40*	40*	40*	40*	40*	40*	40*	40*	40*	40*	40*	40*	40*	40*	40*	40*	40*	40*	40*	40*	40*	40*	40*	40*	40*	40*	40*	40*	40*	40*	40*	40*	37*	40*	40*	33*
			Exposed	40*	40*	40*	40*	40*	40*	40*	40*	40*	40*	40*	40*	40*	40*	40*	40*	40*	40*	40*	40*	40*	40*	40*	40*	40*	40*	36*	40*	40*	31	40*	34*	41	34*	30	36	30	41	32
	D	0-7	Interior	37	37	37	37	37	37	37	37	37	37	37	37	37	37	37	37	37	37	37	37	37	37	37	37	37	37	36	37	37	31	37	37	41	37	33	36	37	30	32
			Exposed	37	37	37	37	37	37	37	37	37	37	37	37	37	37	37	37	37	35	37	37	32	37	37	41	37	33	35	37	43	31	34	38	27	30	33	24	40	29	21
		7-20	Interior	37	37	37	37	37	37	37	37	37	37	37	37	37	37	37	37	37	37	37	37	37	37	37	37	37	37	31	37	37	41	37	32	36	37	43	32	34	38	28
			Exposed	37	37	37	37	37	37	37	37	37	37	37	37	37	37	34	37	37	31	37	37	43	37	32	36	37	42	31	33	36	27	29	32	24	38	28	21	34	25	19
		20-27	Interior	41*	41*	41*	41*	41*	41*	41*	41*	41*	41*	41*	41*	41*	41*	41*	41*	41*	41*	41*	41*	41*	41*	41*	41*	41*	41*	40*	41*	41*	33	41*	35	29	40*	31	38	41*	41	34
			Exposed	41*	41*	41*	41*	41*	41*	41*	41*	41*	41*	41*	41*	41*	41*	41*	41*	41*	39*	41*	41*	34	41*	35	29	41*	30	38	41*	39	33	40*	34	29	34	30	25	30	27	22
		27-45	Interior	44*	44*	44*	44*	44*	44*	44*	44*	44*	44*	44*	44*	44*	44*	44*	44*	44*	44*	44*	44*	44*	44*	44*	44*	44*	44*	44*	42*	42*	42*	41*	41*	35	40*	40*	30	39*	34	41
			Exposed	44*	44*	44*	44*	44*	44*	44*	44*	44*	44*	44*	44*	44*	44*	44*	44*	44*	44*	44*	44*	44*	44*	44*	35	44*	39*	30	37*	33	39	32	43	34	42	38	30	38	34	27

* Cells with an astrisks indicates that the L-foot must be oriented in the Y- direction as indicated in the image.

10 Highlighted cell indicate 3-rail system span. Contact Unirac Engineering Services for support.

~~10~~ Highlighted cell with strikethrough indicate 3-rail system span and module clamp allowable capacity exceeds with 3-rails. 4-Rail system required. Contact Unirac Engineering Services for support.

UNIRAC

ASCE 7-22	II	30 ft	Ss = 3.00	23 sq.ft	LANDSCAPE	CROSS-SLOPE	NXT	NXT COMBO	Stronghold BUTYL Rafter #14S
Design Standard	Risk Category	Roof Height	Seismic	Module Area	Orientation	Rail Direction	Rail Type	Clamp	Attachment

SPAN TABLES

Maximum Allowable Rail Spans for Rooftop Solar Panels Parallel to the Roof Surface (inches)

Ground Snow Load (psf)	Wind Exposure Category	Roof Tilt Angle (deg)	Panel Exposure	Basic Wind Speed (mph)																																								
				90			95			100			105			110			115			120			130			140			150			160			170			180		
				Roof Wind Zone																																								
				1	2	3	1	2	3	1	2	3	1	2	3	1	2	3	1	2	3	1	2	3	1	2	3	1	2	3	1	2	3	1	2	3	1	2	3	1	2	3
0	B	0-7	Interior	101	101	101	101	101	101	101	101	101	101	101	96	101	101	92	101	101	88	101	97	84	101	90	78	97	84	73	91	79	68	86	75	65	81	71	62	77	67	60
			Exposed	101	101	91	101	100	87	101	95	82	101	91	79	101	87	75	97	84	72	93	80	70	86	75	65	80	70	62	75	66	59	71	63	55	68	60	52	64	58	59
		7-20	Interior	102	102	102	102	102	102	102	102	98	102	102	93	102	102	88	102	98	84	102	94	81	102	86	74	94	80	69	87	74	65	81	70	62	76	66	60	72	63	57
			Exposed	102	102	88	102	97	83	102	92	79	102	87	75	98	83	72	93	79	69	89	76	66	82	70	62	76	65	59	71	62	55	66	60	52	63	56	59	61	53	56
		20-27	Interior	102	102	102	102	102	102	102	102	102	102	102	102	102	102	98	102	102	93	102	98	89	102	90	82	102	83	76	98	77	71	92	73	66	87	68	63	82	65	61
			Exposed	102	102	98	102	102	92	102	96	87	102	91	83	102	87	79	102	83	75	100	79	72	92	73	67	86	68	63	80	64	60	76	61	57	72	59	53	68	55	50
		27-45	Interior	103	103	103	103	103	103	103	103	103	103	103	103	103	103	103	103	103	100	103	103	96	103	98	88	99	91	82	92	85	77	86	80	72	80	75	68	76	71	65
			Exposed	103	103	103	103	103	99	103	103	94	103	99	89	103	94	85	99	90	82	94	86	78	86	80	72	80	75	68	74	70	64	70	66	61	66	63	59	63	61	55
	C	0-7	Interior	101	101	94	101	101	89	101	98	85	101	93	81	101	89	77	99	86	74	95	82	71	88	77	66	82	72	63	77	68	60	73	64	57	69	62	53	66	59	61
			Exposed	101	89	77	98	85	73	93	81	70	89	77	67	85	74	64	82	71	63	79	69	61	73	64	57	69	61	53	65	58	60	62	54	56	59	61	53	56	59	49
		7-20	Interior	102	102	91	102	100	86	102	94	81	102	90	77	101	85	74	96	81	71	92	78	68	84	72	63	78	67	60	73	63	57	68	61	53	65	58	60	62	55	58
			Exposed	101	85	74	95	80	70	89	76	66	85	73	64	81	70	62	77	67	60	74	64	58	68	61	54	64	58	60	61	54	57	59	60	53	55	58	49	52	55	44
		20-27	Interior	102	102	101	102	102	95	102	99	90	102	94	85	102	89	81	102	85	77	102	81	74	95	75	68	88	70	64	82	65	61	78	62	58	73	60	55	70	57	52
			Exposed	102	89	81	102	84	76	101	80	73	96	76	69	92	72	66	88	69	64	84	66	62	78	63	59	73	59	54	68	56	51	65	52	58	62	60	55	60	57	52
		27-45	Interior	103	103	103	103	103	102	103	103	97	103	101	92	103	97	88	102	92	84	97	89	80	89	82	74	82	77	69	76	72	65	72	68	62	67	64	60	64	62	57
			Exposed	103	97	87	100	91	83	95	87	79	90	83	75	85	79	72	81	76	69	78	73	66	72	68	62	67	64	59	63	61	56	61	58	52	58	55	59	55	52	57
	D	0-7	Interior	101	100	86	101	94	82	101	90	78	100	86	74	95	82	71	91	79	69	87	76	66	81	71	62	76	67	59	71	63	55	68	60	52	64	58	59	62	54	56
			Exposed	95	82	71	90	78	68	86	75	65	82	72	63	79	69	61	76	66	59	73	64	57	68	61	52	64	57	59	61	53	55	58	60	52	55	57	47	52	54	41
		7-20	Interior	102	96	83	102	91	78	102	86	74	96	82	71	91	78	68	87	75	65	83	72	63	77	66	60	71	63	56	67	60	52	63	56	59	61	53	56	58	60	53
			Exposed	91	78	68	86	74	64	82	70	62	78	67	60	74	64	58	71	62	56	68	61	53	64	57	60	60	53	56	57	60	52	53	56	47	50	53	41	58	49	37
		20-27	Interior	102	101	91	102	95	86	102	90	82	102	85	78	102	81	74	98	78	71	94	74	68	87	69	64	81	64	60	76	61	57	72	59	53	68	55	50	64	52	58
			Exposed	102	81	74	97	77	70	92	73	67	88	69	64	84	66	62	81	64	60	77	62	58	72	59	54	67	55	60	64	51	57	61	58	53	58	55	50	55	52	44
		27-45	Interior	103	103	98	103	103	93	103	97	88	102	93	84	97	89	80	92	85	77	88	82	74	81	76	68	75	71	64	70	66	61	66	63	59	63	61	55	60	58	52
			Exposed	96	88	80	91	84	76	86	80	72	82	76	69	78	73	66	74	70	64	71	68	62	66	63	59	62	60	55	60	57	51	56	53	58	53	60	55	60	58	52
10	B	0-7	Interior	95	95	95	95	95	95	95	95	95	95	95	95	95	95	92	95	95	88	95	95	84	95	90	78	95	84	73	91	79	68	86	75	65	81	71	62	77	67	60
			Exposed	95	95	91	95	95	87	95	95	82	95	91	79	95	87	75	95	84	72	93	80	70	86	75	65	80	70	62	75	66	59	71	63	55	68	60	52	64	58	59
		7-20	Interior	95	95	95	95	95	95	95	95	95	95	95	93	95	95	88	95	95	84	95	94	81	95	86	74	94	80	69	87	74	65	81	70	62	76	66	60	72	63	57
			Exposed	95	95	88	95	95	83	95	92	79	95	87	75	95	83	72	93	79	69	89	76	66	82	70	62	76	65	59	71	62	55	66	60	52	63	56	59	61	53	56
		20-27	Interior	99	99	99	99	99	99	99	99	99	99	99	99	99	99	98	99	99	93	99	98	89	99	90	82	99	83	76	98	77	71	92	73	66	87	68	63	82	65	61
			Exposed	99	99	98	99	99	92	99	96	87	99	91	83	99	87	79	99	83	75	99	79	72	92	73	67	86	68	63	80	64	60	76	61	57	72	59	53	68	55	50
		27-45	Interior	102	102	102	102	102	102	102	102	102	102	102	102	102	102	102	102	102	100	102	102	96	102	98	88	99	91	82	92	85	77	86	80	72	80	75	68	76	71	65
			Exposed	102	102	102	102	102	99	102	102	94	102	99	89	102	94	85	99	90	82	94	86	78	86	80	72	80	75	68	74	70	64	70	66	61	66	63	59	63	61	55
	C	0-7	Interior	95	95	94	95	95	89	95	95	85	95	93	81	95	89	77	95	86	74	95	82	71	88	77	66	82	72	63	77	68	60	73	64	57	69	62	53	66	59	61
			Exposed	95	89	77	95	85	73	93	81	70	89	77	67	85	74	64	82	71	63	79	69	61	73	64	57	69	61	53	65	58	60	62	54	56	59	61	53	56	59	49
		7-20	Interior	95	95	91	95	95	86	95	94	81	95	90	77	95	85	74	95	81	71	92	78	68	84	72	63	78	67	60	73	63	57	68	61	53	65	58	60	62	55	58
			Exposed	95	85	74	95	80	70	89	76	66	85	73	64	81	70	62	77	67	60	74	64	58	68	61	54	64	58	60	61	54	57	59	60	53	55	58	49	52	55	44
		20-27	Interior	99	99	99	99	99	95	99	99	90	99	94	85	99	89	81	99	85	77	99	81	74	95	75	68	88	70	64	82	65	61	78	62	58	73	60	55	70	57	52
			Exposed	99	89	81	99	84	76	99	80	73	96	76	69	92	72	66	88	69	64	84	66	62	78	63	59	73	59	54	68	56	51	65	52	58	62	60	55	60	57	52
		27-45	Interior	102	102	102	102	102	102	102	102	97	102	101	92	102	97	88	102	92	84	97	89	80	89	82	74	82	77	69	76	72	65	72	68	62	67	64	60	64	62	57
			Exposed	102	97	87	100	91	83	95	87	79	90	83	75	85	79	72	81	76	69	78	73	66	72	68	62	67	64	59	63	61	56	61	58	52	58	55	59	55	52	57
	D	0-7	Interior	95	95	86	95	94	82	95	90	78	95	86	74	95	82	71	91	79	69	87	76	66	81	71	62	76	67	59	71	63	55	68	60	52	64	58	59	62	54	56
			Exposed	95	82	71	90	78	68	86	75	65	82	72	63	79	69	61	76	66	59	73	64	57	68	61	52	64	57	59	61	53	55	58	60	52	55	57	47	52	54	41
		7-20	Interior	95	95	83	95	91	78	95	86	74	95	82	71	91	78	68	87	75	65	83	72	63	77	66	60	71	63	56	67	60	52	63	56	59	61	53	56	58	60	53
			Exposed	91	78	68	86	74	64	82	70	62	78	67	60	74	64	58	71	62	56	68	61	53	64	57	60	60	53	56	57	60	52	53	56	47	50	53	41	58	49	37
		20-27	Interior	100	100	91	100	95	86	100	90	82	100	85	78	100	81	74	98	78	71	94	74	68	87	69	64	81	64	60	76	61	57	72	59	53	68	55	50	64	52	58
			Exposed	100	81	74	97	77	70	92	73	67	88	69	64	84	66	62	81	64	60	77	62	58	72	59	54	67	55	60	64	51	57	61	58	53	58	55	50	55	52	44
		27-45	Interior	102	102	98	102	102	93	102	97	88	102	93	84	97	89	80	92	85	77	88	82	74	81	76	68	75	71	64	70	66	61	66	63	59	63	61	55	60	58	52
			Exposed	96	88	80	91	84	76	86	80	72	82	76	69	78	73	66	74	70	64	71	68	62	66	63	59	62	60	55	60	57	51	56	53	58	53	60	55	60	58	52
20	B	0-7	Interior	85	85	85	85	85	85	85	85	85	85	85	85	85	85	85	85	85	85	85	85	84	85	85	78	85	84	73	85	79	68	85	75	65	81	71	62	77	67	60
			Exposed	85	85	85	85	85	85	85	85	82	85	85	79	85	85	75	85	84	72	85	80	70	85	75	65	80	70	62	75	66	59	71	63	55	68	60	52	64	58	59
		7-20	Interior	85	85	85	85	85	85	85	85	85	85	85	85	85	85	85	85	85	84	85	85	81	85	85	74	85	80	69	85	74	65	81	70	62	76	66	60	72	63	57
			Exposed	85	85	85	85	85	83	85	85	79	85	85	75	85	83	72	85	79	69	85	76	66	82	70	62	76	65	59	71	62	55	66	60	52	63	56	59	61	53	56
		20-27	Interior	92	92	92	92	92	92	92	92	92	92	92	92	92	92	92	92	92	92	92	92	89	92	90	82	92	83	76	92	77	71	92	73	66	87	68	63	82	65	61
			Exposed	92	92	92	92	92	92	92	92	87	92	91	83	92	87	79	92	83	75	92	79	72	92	73	67	86	68	63	80	64	60	76	61	57	72	59	53	68	55	50
		27-45	Interior	95	95	95	95	95	95	95	95	95	95	95	95	95	95	95	95	95	95	95	95	95	95	95	88	95	91	82	92	85	77	86	80	72	80	75	68	76	71	65
			Exposed	95	95	95	95	95	95	95	95	94	95	95	89	95	94	85	95	90	82	94	86	78	86	80	72	80	75	68	74	70	64	70	66	61	66	63	59	63	61	55
	C	0-7	Interior	85	85	85	85	85	85	85	85	85	85	85	81	85	85	77	85	85	74	85	82	71	85	77	66	82	72	63	77	68	60	73	64	57	69	62	53	66	59	61
			Exposed	85	85	77	85	85	73	85	81	70	85	77	67	85	74	64	82	71	63	79	69	61	73	64	57	69	61	53	65	58	60	62	54	56	59	61	53	56	59	49
		7-20	Interior	85	85	85	85	85	85	85	85	81	85	85	77	85	85	74	85	81	71	85	78	68	84	72	63	78	67	60	73	63	57	68	61	53	65	58	60	62	55	58
			Exposed	85	85	74	85	80	70	85	76	66	85	73	64	81	70	62	77	67	60	74	64	58	68	61	54	64	58	60	61	54	57	59	60	53	55	58	49	52	55	44
		20-27	Interior	92	92	92	92	92	92	92	92	90	92	92	85	92	89	81	92	85	77	92	81	74	92	75	68	88	70	64	82	65	61	78	62	58	73	60	55	70	57	52
			Exposed	92	89	81	92	84	76	92	80	73	92	76	69	92	72	66	88	69	64	84	66	62	78	63	59	73	59	54	68	56	51	65	52	58	62	60	55	60	57	52
		27-45	Interior	95	95	95	95	95	95	95	95	95	95	95	95	95	95	88	95	95	84	95	89	80	89	82	74	82	77	69	76	72	65	72	68	62	67	64	60	64	62	57
			Exposed	95	95	87	95	91	83	95	87	79	90	83	75	85	79	72	81	76	69	78	73	66	72	68	62	67	64	59	63	61	56	61	58	52	58	55	59	55	52	57
	D	0-7	Interior	85	85	85	85	85	82	85	85	78	85	85	74	85	82	71	85	79	69	85	76	66	81	71	62	76	67	59	71	63	55	68	60	52	64	58	59	62	54	56
			Exposed	85	82	71	85	78	68	85	75	65	82	72	63	79	69	61	76	66	59	73	64	57	68	61	52	64	57	59	61	53	55	58	60	52	55	57	47	52	54	41
		7-20	Interior	85	85	83	85	85	78	85	85	74	85	82	71	85	78	68	85	75	65	83	72	63	77	66	60	71	63	56	67	60	52	63	56	59	61	53	56	58	60	53
			Exposed	85	78	68	85	74	64	82	70	62	78	67	60	74	64	58	71	62	56	68	61	53	64	57	60	60	53	56	57	60	52	53	56	47	50	53	41	58	49	37
		20-27	Interior	93	93	91	93	93	86	93	90	82	93	85	78	93	81	74	93	78	71	93	74	68	87	69	64	81	64	60	76	61	57	72	59	53	68	55	50	64	52	58
			Exposed	93	81	74	93	77	70	92	73	67	88	69	64	84	66	62	81	64	60	77	62	58	72	59	54	67	55	60	64	51	57	61	58	53	58	55	50	55	52	44
		27-45	Interior	96	96	96	96	96	93	96	96	88	96	93	84	96	89	80	92	85	77	88	82	74	81	76	68	75	71	64	70	66	61	66	63	59	63	61	55	60	58	52
			Exposed	96	88	80	91	84	76	86	80	72	82	76	69	78	73	66	74	70	64	71	68	62	66	63	59	62	60	55	60	57	51	56	53	58	53	60	55	60	58	52

* Cells with an astrisks indicates that the L-foot must be oriented in the Y- direction as indicated in the image.

10 Highlighted cell indicate 3-rail system span. Contact Unirac Engineering Services for support.

~~10~~ Highlighted cell with strikethrough indicate 3-rail system span and module clamp allowable capacity exceeds with 3-rails. 4-Rail system required. Contact Unirac Engineering Services for support.

UNIRAC

ASCE 7-22	II	30 ft	Ss = 3.00	23 sq.ft	LANDSCAPE	CROSS-SLOPE	NXT	NXT COMBO	Stronghold BUTYL Rafter #14S
Design Standard	Risk Category	Roof Height	Seismic	Module Area	Orientation	Rail Direction	Rail Type	Clamp	Attachment

SPAN TABLES

Maximum Allowable Rail Spans for Rooftop Solar Panels Parallel to the Roof Surface (inches)

Ground Snow Load (psf)	Wind Exposure Category	Roof Tilt Angle (deg)	Panel Exposure	Basic Wind Speed (mph)																																						
				90			95			100			105			110			115			120			130			140			150			160			170			180		
				Roof Wind Zone																																						
				1	2	3	1	2	3	1	2	3	1	2	3	1	2	3	1	2	3	1	2	3	1	2	3	1	2	3	1	2	3	1	2	3	1	2	3	1	2	3
30	B	0-7	Interior	76	76	76	76	76	76	76	76	76	76	76	76	76	76	76	76	76	76	76	76	76	76	76	76	76	76	73	76	76	68	76	75	65	76	71	62	76	67	60
			Exposed	76	76	76	76	76	76	76	76	76	76	76	76	76	76	75	76	76	72	76	76	70	76	75	65	76	70	62	75	66	59	71	63	55	68	60	52	64	58	59
		7-20	Interior	76	76	76	76	76	76	76	76	76	76	76	76	76	76	76	76	76	76	76	76	76	76	76	74	76	76	69	76	74	65	76	70	62	76	66	60	72	63	57
			Exposed	76	76	76	76	76	76	76	76	76	76	76	75	76	76	72	76	76	69	76	76	66	76	70	62	76	65	59	71	62	55	66	60	52	63	56	59	61	53	56
		20-27	Interior	86	86	86	86	86	86	86	86	86	86	86	86	86	86	86	86	86	86	86	86	86	86	86	82	86	83	76	86	77	71	86	73	66	86	68	63	82	65	61
			Exposed	86	86	86	86	86	86	86	86	86	86	86	83	86	86	79	86	83	75	86	79	72	86	73	67	86	68	63	80	64	60	76	61	57	72	59	53	68	55	50
		27-45	Interior	90	90	90	90	90	90	90	90	90	90	90	90	90	90	90	90	90	90	90	90	90	90	90	88	90	90	82	89	85	77	86	80	72	80	75	68	76	71	65
			Exposed	90	90	90	90	90	90	90	90	90	90	90	89	90	90	85	90	90	82	90	86	78	86	80	72	80	75	68	74	70	64	70	66	61	66	63	59	63	61	55
	C	0-7	Interior	76	76	76	76	76	76	76	76	76	76	76	76	76	76	76	76	76	74	76	76	71	76	76	66	76	72	63	76	68	60	73	64	57	69	62	53	66	59	61
			Exposed	76	76	76	76	76	73	76	76	70	76	76	67	76	74	64	76	71	63	76	69	61	73	64	57	69	61	53	65	58	60	62	54	56	59	61	53	56	59	49
		7-20	Interior	76	76	76	76	76	76	76	76	76	76	76	76	76	76	74	76	76	71	76	76	68	76	72	63	76	67	60	73	63	57	68	61	53	65	58	60	62	55	58
			Exposed	76	76	74	76	76	70	76	76	66	76	73	64	76	70	62	76	67	60	74	64	58	68	61	54	64	58	60	61	54	57	59	60	53	55	58	49	52	55	44
		20-27	Interior	86	86	86	86	86	86	86	86	86	86	86	85	86	86	81	86	85	77	86	81	74	86	75	68	86	70	64	82	65	61	78	62	58	73	60	55	70	57	52
			Exposed	86	86	81	86	84	76	86	80	73	86	76	69	86	72	66	86	69	64	84	66	62	78	63	59	73	59	54	68	56	51	65	52	58	62	60	55	60	57	52
		27-45	Interior	90	90	90	90	90	90	90	90	90	90	90	90	90	90	88	90	90	84	90	89	80	89	82	74	82	77	69	76	72	65	72	68	62	67	64	60	64	62	57
			Exposed	90	90	87	90	90	83	90	87	79	90	83	75	85	79	72	81	76	69	78	73	66	72	68	62	67	64	59	63	61	56	61	58	52	58	55	59	55	52	57
	D	0-7	Interior	76	76	76	76	76	76	76	76	76	76	76	74	76	76	71	76	76	69	76	76	66	76	71	62	76	67	59	71	63	55	68	60	52	64	58	59	62	54	56
			Exposed	76	76	71	76	76	68	76	75	65	76	72	63	76	69	61	76	66	59	73	64	57	68	61	52	64	57	59	61	53	55	58	60	52	55	57	47	52	54	41
		7-20	Interior	76	76	76	76	76	76	76	76	74	76	76	71	76	76	68	76	75	65	76	72	63	76	66	60	71	63	56	67	60	52	63	56	59	61	53	56	58	60	53
			Exposed	76	76	68	76	74	64	76	70	62	76	67	60	74	64	58	71	62	56	68	61	53	64	57	60	60	53	56	57	60	52	53	56	47	50	53	41	58	49	37
		20-27	Interior	88	88	88	88	88	86	88	88	82	88	85	78	88	81	74	88	78	71	88	74	68	87	69	64	81	64	60	76	61	57	72	59	53	68	55	50	64	52	58
			Exposed	88	81	74	88	77	70	88	73	67	88	69	64	84	66	62	81	64	60	77	62	58	72	59	54	67	55	60	64	51	57	61	58	53	58	55	50	55	52	44
		27-45	Interior	91	91	91	91	91	91	91	91	88	91	91	84	91	89	80	91	85	77	88	82	74	81	76	68	75	71	64	70	66	61	66	63	59	63	61	55	60	58	52
			Exposed	91	88	80	91	84	76	86	80	72	82	76	69	78	73	66	74	70	64	71	68	62	66	63	59	62	60	55	60	57	51	56	53	58	53	60	55	60	58	52
40	B	0-7	Interior	73	73	73	73	73	73	73	73	73	73	73	73	73	73	73	73	73	73	73	73	73	73	73	73	73	73	73	73	73	68	73	73	65	73	71	62	73	67	60
			Exposed	73	73	73	73	73	73	73	73	73	73	73	73	73	73	73	73	73	72	73	73	70	73	73	65	73	70	62	73	66	59	71	63	55	68	60	52	64	58	59
		7-20	Interior	74	74	74	74	74	74	74	74	74	74	74	74	74	74	74	74	74	74	74	74	74	74	74	74	74	74	69	74	74	65	74	70	62	74	66	60	72	63	57
			Exposed	74	74	74	74	74	74	74	74	74	74	74	74	74	74	72	74	74	69	74	74	66	74	70	62	74	65	59	71	62	55	66	60	52	63	56	59	61	53	56
		20-27	Interior	79	79	79	79	79	79	79	79	79	79	79	79	79	79	79	79	79	79	79	79	79	79	79	79	79	79	76	79	77	71	79	73	66	79	68	63	78	65	61
			Exposed	79	79	79	79	79	79	79	79	79	79	79	79	79	79	79	79	79	75	79	79	72	79	73	67	79	68	63	79	64	60	76	61	57	72	59	53	68	55	50
		27-45	Interior	85	85	85	85	85	85	85	85	85	85	85	85	85	85	85	85	85	85	85	85	85	85	85	85	85	85	82	84	84	77	81	80	72	79	75	68	76	71	65
			Exposed	85	85	85	85	85	85	85	85	85	85	85	85	85	85	85	85	85	82	85	85	78	85	80	72	80	75	68	74	70	64	70	66	61	66	63	59	63	61	55
	C	0-7	Interior	73	73	73	73	73	73	73	73	73	73	73	73	73	73	73	73	73	73	73	73	71	73	73	66	73	72	63	73	68	60	73	64	57	69	62	53	66	59	61
			Exposed	73	73	73	73	73	73	73	73	70	73	73	67	73	73	64	73	71	63	73	69	61	73	64	57	69	61	53	65	58	60	62	54	56	59	61	53	56	59	49
		7-20	Interior	74	74	74	74	74	74	74	74	74	74	74	74	74	74	74	74	74	71	74	74	68	74	72	63	74	67	60	72	63	57	68	61	53	65	58	60	62	55	58
			Exposed	74	74	74	74	74	70	74	74	66	74	73	64	74	70	62	74	67	60	74	64	58	68	61	54	64	58	60	61	54	57	59	60	53	55	58	49	52	55	44
		20-27	Interior	79	79	79	79	79	79	79	79	79	79	79	79	79	79	79	79	79	77	79	79	74	79	75	68	79	70	64	78	65	61	76	62	58	73	60	55	70	57	52
			Exposed	79	79	79	79	79	76	79	79	73	79	79	69	79	72	66	79	69	64	79	66	62	78	63	59	73	59	54	68	56	51	65	52	58	62	60	55	60	57	52
		27-45	Interior	85	85	85	85	85	85	85	85	85	85	85	85	85	85	85	85	85	84	85	85	80	83	82	74	80	77	69	76	72	65	72	68	62	67	64	60	64	62	57
			Exposed	85	85	85	85	85	83	85	85	79	85	83	75	85	79	72	81	76	69	78	73	66	72	68	62	67	64	59	63	61	56	61	58	52	58	55	59	55	52	57
	D	0-7	Interior	76	76	76	76	76	76	76	76	76	76	76	74	76	76	71	76	76	69	76	76	66	76	71	62	76	67	59	71	63	55	68	60	52	64	58	59	62	54	56
			Exposed	76	76	71	76	76	68	76	75	65	76	72	63	76	69	61	76	66	59	73	64	57	68	61	52	64	57	59	61	53	55	58	60	52	55	57	47	52	54	41
		7-20	Interior	76	76	76	76	76	76	76	76	74	76	76	71	76	76	68	76	75	65	76	72	63	76	66	60	71	63	56	67	60	52	63	56	59	61	53	56	58	60	53
			Exposed	76	76	68	76	74	64	76	70	62	76	67	60	74	64	58	71	62	56	68	61	53	64	57	60	60	53	56	57	60	52	53	56	47	50	53	41	58	49	37
		20-27	Interior	81	81	81	81	81	81	81	81	81	81	81	78	81	81	74	81	78	71	81	74	68	81	69	64	80	64	60	76	61	57	72	59	53	68	55	50	64	52	58
			Exposed	81	81	74	81	77	70	81	73	67	81	69	64	81	66	62	81	64	60	77	62	58	72	59	54	67	55	60	64	51	57	61	58	53	58	55	50	55	52	44
		27-45	Interior	87	87	87	87	87	87	87	87	87	87	87	84	87	87	80	87	85	77	85	82	74	81	76	68	75	71	64	70	66	61	66	63	59	63	61	55	60	58	52
			Exposed	87	87	80	87	84	76	86	80	72	82	76	69	78	73	66	74	70	64	71	68	62	66	63	59	62	60	55	60	57	51	56	53	58	53	60	55	60	58	52
50	B	0-7	Interior	68	68	68	68	68	68	68	68	68	68	68	68	68	68	68	68	68	68	68	68	68	68	68	68	68	68	68	68	68	68	68	68	65	68	68	62	68	67	60
			Exposed	68	68	68	68	68	68	68	68	68	68	68	68	68	68	68	68	68	68	68	68	68	68	68	65	68	68	62	68	66	59	68	63	55	68	60	52	64	58	59
		7-20	Interior	68	68	68	68	68	68	68	68	68	68	68	68	68	68	68	68	68	68	68	68	68	68	68	68	68	68	68	68	68	65	68	68	62	68	66	60	67	63	57
			Exposed	68	68	68	68	68	68	68	68	68	68	68	68	68	68	68	68	68	68	68	68	66	68	68	62	68	65	59	68	62	55	66	60	52	63	56	59	61	53	56
		20-27	Interior	74	74	74	74	74	74	74	74	74	74	74	74	74	74	74	74	74	74	74	74	74	74	74	74	74	74	74	74	74	71	74	73	66	74	68	63	72	65	61
			Exposed	74	74	74	74	74	74	74	74	74	74	74	74	74	74	74	74	74	74	74	74	72	74	73	67	74	68	63	74	64	60	74	61	57	72	59	53	68	55	50
		27-45	Interior	80	80	80	80	80	80	80	80	80	80	80	80	80	80	80	80	80	80	80	80	80	80	80	80	80	80	80	78	78	77	76	76	72	74	74	68	72	71	65
			Exposed	80	80	80	80	80	80	80	80	80	80	80	80	80	80	80	80	80	80	80	80	78	80	80	72	80	75	68	74	70	64	70	66	61	66	63	59	63	61	55
	C	0-7	Interior	68	68	68	68	68	68	68	68	68	68	68	68	68	68	68	68	68	68	68	68	68	68	68	66	68	68	63	68	68	60	68	64	57	68	62	53	66	59	61
			Exposed	68	68	68	68	68	68	68	68	68	68	68	67	68	68	64	68	68	63	68	68	61	68	64	57	68	61	53	65	58	60	62	54	56	59	61	53	56	59	49
		7-20	Interior	68	68	68	68	68	68	68	68	68	68	68	68	68	68	68	68	68	68	68	68	68	68	68	63	68	67	60	67	63	57	66	61	53	64	58	60	62	55	58
			Exposed	68	68	68	68	68	68	68	68	66	68	68	64	68	68	62	68	67	60	68	64	58	68	61	54	64	58	60	61	54	57	59	60	53	55	58	49	52	55	44
		20-27	Interior	74	74	74	74	74	74	74	74	74	74	74	74	74	74	74	74	74	74	74	74	74	74	74	68	74	70	64	73	65	61	71	62	58	69	60	55	68	57	52
			Exposed	74	74	74	74	74	74	74	74	73	74	74	69	74	72	66	74	69	64	74	66	62	74	63	59	73	59	54	68	56	51	65	52	58	62	60	55	60	57	52
		27-45	Interior	80	80	80	80	80	80	80	80	80	80	80	80	80	80	80	80	80	80	80	80	80	77	77	74	75	75	69	72	72	65	70	68	62	67	64	60	64	62	57
			Exposed	80	80	80	80	80	80	80	80	79	80	80	75	80	79	72	80	76	69	78	73	66	72	68	62	67	64	59	63	61	56	61	58	52	58	55	59	55	52	57
	D	0-7	Interior	70	70	70	70	70	70	70	70	70	70	70	70	70	70	70	70	70	69	70	70	66	70	70	62	70	67	59	70	63	55	68	60	52	64	58	59	62	54	56
			Exposed	70	70	70	70	70	68	70	70	65	70	70	63	70	69	61	70	66	59	70	64	57	68	61	52	64	57	59	61	53	55	58	60	52	55	57	47	52	54	41
		7-20	Interior	71	71	71	71	71	71	71	71	71	71	71	71	71	71	68	71	71	65	71	71	63	71	66	60	69	63	56	67	60	52	63	56	59	61	53	56	58	60	53
			Exposed	71	71	68	71	71	64	71	70	62	71	67	60	71	64	58	71	62	56	68	61	53	64	57	60	60	53	56	57	60	52	53	56	47	50	53	41	58	49	37
		20-27	Interior	76	76	76	76	76	76	76	76	76	76	76	76	76	76	74	76	76	71	76	74	68	76	69	64	75	64	60	73	61	57	71	59	53	68	55	50	64	52	58
			Exposed	76	76	74	76	76	70	76	73	67	76	69	64	76	66	62	76	64	60	76	62	58	72	59	54	67	55	60	64	51	57	61	58	53	58	55	50	55	52	44
		27-45	Interior	82	82	82	82	82	82	82	82	82	82	82	82	82	82	80	81	81	77	79	79	74	77	76	68	74	71	64	70	66	61	66	63	59	63	61	55	60	58	52
			Exposed	82	82	80	82	82	76	82	80	72	82	76	69	78	73	66	74	70	64	71	68	62	66	63	59	62	60	55	60	57	51	56	53	58	53	60	55	60	58	52

* Cells with an astrisks indicates that the L-foot must be oriented in the Y- direction as indicated in the image.

10 Highlighted cell indicate 3-rail system span. Contact Unirac Engineering Services for support.

~~10~~ Highlighted cell with strikethrough indicate 3-rail system span and module clamp allowable capacity exceeds with 3-rails. 4-Rail system required. Contact Unirac Engineering Services for support.

UNIRAC

ASCE 7-22	II	30 ft	Ss = 3.00	23 sq.ft	LANDSCAPE	CROSS-SLOPE	NXT	NXT COMBO	Stronghold BUTYL Rafter #14S
Design Standard	Risk Category	Roof Height	Seismic	Module Area	Orientation	Rail Direction	Rail Type	Clamp	Attachment

SPAN TABLES

Maximum Allowable Rail Spans for Rooftop Solar Panels Parallel to the Roof Surface (inches)

Ground Snow Load (psf)	Wind Exposure Category	Roof Tilt Angle (deg)	Panel Exposure	Basic Wind Speed (mph)																																										
				90			95			100			105			110			115			120			130			140			150			160			170			180		
				Roof Wind Zone																																										
				1	2	3	1	2	3	1	2	3	1	2	3	1	2	3	1	2	3	1	2	3	1	2	3	1	2	3	1	2	3	1	2	3	1	2	3	1	2	3
60	B	0-7	Interior	62	62	62	62	62	62	62	62	62	62	62	62	62	62	62	62	62	62	62	62	62	62	62	62	62	62	62	62	62	62	62	62	62	62	62	62	62	62	62	62	62	60
			Exposed	62	62	62	62	62	62	62	62	62	62	62	62	62	62	62	62	62	62	62	62	62	62	62	62	62	62	62	62	62	59	62	62	55	62	60	52	62	58	59
		7-20	Interior	63	63	63	63	63	63	63	63	63	63	63	63	63	63	63	63	63	63	63	63	63	63	63	63	63	63	63	63	63	63	63	63	62	63	63	60	63	63	57
			Exposed	63	63	63	63	63	63	63	63	63	63	63	63	63	63	63	63	63	63	63	63	63	63	63	62	63	63	59	63	62	55	63	60	52	63	56	59	61	53	56
		20-27	Interior	69	69	69	69	69	69	69	69	69	69	69	69	69	69	69	69	69	69	69	69	69	69	69	69	69	69	69	69	69	69	69	69	66	69	68	63	68	65	61
			Exposed	69	69	69	69	69	69	69	69	69	69	69	69	69	69	69	69	69	69	69	69	69	69	69	67	69	68	63	69	64	60	69	61	57	69	59	53	68	55	50
		27-45	Interior	75	75	75	75	75	75	75	75	75	75	75	75	75	75	75	75	75	75	75	75	75	75	75	75	75	75	75	74	74	74	72	72	72	70	70	68	68	68	65
			Exposed	75	75	75	75	75	75	75	75	75	75	75	75	75	75	75	75	75	75	75	75	75	75	75	72	75	75	68	74	70	64	70	66	61	66	63	59	63	61	55
	C	0-7	Interior	62	62	62	62	62	62	62	62	62	62	62	62	62	62	62	62	62	62	62	62	62	62	62	62	62	62	62	62	62	60	62	62	57	62	62	53	62	59	61
			Exposed	62	62	62	62	62	62	62	62	62	62	62	62	62	62	62	62	62	62	62	62	61	62	62	57	62	61	53	62	58	60	62	54	56	59	61	53	56	59	49
		7-20	Interior	63	63	63	63	63	63	63	63	63	63	63	63	63	63	63	63	63	63	63	63	63	63	63	63	63	63	60	63	63	57	62	61	53	61	58	60	60	55	58
			Exposed	63	63	63	63	63	63	63	63	63	63	63	63	63	63	62	63	63	60	63	63	58	63	61	54	63	58	60	61	54	57	59	60	53	55	58	49	52	55	44
		20-27	Interior	69	69	69	69	69	69	69	69	69	69	69	69	69	69	69	69	69	69	69	69	69	69	69	68	69	69	64	68	65	61	67	62	58	65	60	55	64	57	52
			Exposed	69	69	69	69	69	69	69	69	69	69	69	69	69	69	66	69	69	64	69	66	62	69	63	59	69	59	54	68	56	51	65	52	58	62	60	55	60	57	52
		27-45	Interior	75	75	75	75	75	75	75	75	75	75	75	75	75	75	75	75	75	75	75	75	75	73	73	73	71	71	69	69	69	65	66	66	62	64	64	60	63	62	57
			Exposed	75	75	75	75	75	75	75	75	75	75	75	75	75	75	72	75	75	69	75	73	66	72	68	62	67	64	59	63	61	56	61	58	52	58	55	59	55	52	57
	D	0-7	Interior	65	65	65	65	65	65	65	65	65	65	65	65	65	65	65	65	65	65	65	65	65	65	65	62	65	65	59	65	63	55	65	60	52	64	58	59	62	54	56
			Exposed	65	65	65	65	65	65	65	65	65	65	63	65	65	61	65	65	59	65	64	57	65	61	52	64	57	59	61	53	55	58	60	52	55	57	47	52	54	41
		7-20	Interior	66	66	66	66	66	66	66	66	66	66	66	66	66	66	66	66	66	65	66	66	63	66	66	60	65	63	56	64	60	52	62	56	59	61	53	56	58	60	53
			Exposed	66	66	66	66	66	64	66	66	62	66	66	60	66	64	58	66	62	56	66	61	53	64	57	60	60	53	56	57	60	52	53	56	47	50	53	41	58	49	37
		20-27	Interior	72	72	72	72	72	72	72	72	72	72	72	72	72	72	72	72	72	71	72	72	68	72	69	64	70	64	60	69	61	57	67	59	53	65	55	50	64	52	58
			Exposed	72	72	72	72	72	70	72	72	67	72	69	64	72	66	62	72	64	60	72	62	58	72	59	54	67	55	60	64	51	57	61	58	53	58	55	50	55	52	44
		27-45	Interior	78	78	78	78	78	78	78	78	78	78	78	78	77	77	77	76	76	76	75	75	74	73	73	68	70	70	64	68	66	61	65	63	59	63	61	55	60	58	52
			Exposed	78	78	78	78	78	76	78	78	72	78	76	69	77	73	66	74	70	64	71	68	62	66	63	59	62	60	55	60	57	51	56	53	58	53	60	55	60	58	52
70	B	0-7	Interior	58	58	58	58	58	58	58	58	58	58	58	58	58	58	58	58	58	58	58	58	58	58	58	58	58	58	58	58	58	58	58	58	58	58	58	58	58	58	58
			Exposed	58	58	58	58	58	58	58	58	58	58	58	58	58	58	58	58	58	58	58	58	58	58	58	58	58	58	58	58	58	58	58	58	55	58	58	52	58	58	59
		7-20	Interior	58	58	58	58	58	58	58	58	58	58	58	58	58	58	58	58	58	58	58	58	58	58	58	58	58	58	58	58	58	58	58	58	58	58	58	58	58	58	57
			Exposed	58	58	58	58	58	58	58	58	58	58	58	58	58	58	58	58	58	58	58	58	58	58	58	58	58	58	58	58	58	55	58	58	52	58	56	59	58	53	56
		20-27	Interior	65	65	65	65	65	65	65	65	65	65	65	65	65	65	65	65	65	65	65	65	65	65	65	65	65	65	65	65	65	65	65	65	65	65	65	63	64	64	61
			Exposed	65	65	65	65	65	65	65	65	65	65	65	65	65	65	65	65	65	65	65	65	65	65	65	65	65	65	63	65	64	60	65	61	57	65	59	53	64	55	50
		27-45	Interior	72	72	72	72	72	72	72	72	72	72	72	72	72	72	72	72	72	72	72	72	72	72	72	72	71	71	71	70	70	70	68	68	68	67	67	67	65	65	65
			Exposed	72	72	72	72	72	72	72	72	72	72	72	72	72	72	72	72	72	72	72	72	72	72	72	72	71	71	68	70	70	64	68	66	61	66	63	59	63	61	55
	C	0-7	Interior	58	58	58	58	58	58	58	58	58	58	58	58	58	58	58	58	58	58	58	58	58	58	58	58	58	58	58	58	58	58	58	58	57	58	58	53	58	58	61
			Exposed	58	58	58	58	58	58	58	58	58	58	58	58	58	58	58	58	58	58	58	58	58	58	58	57	58	58	53	58	58	60	58	54	56	58	61	53	56	59	49
		7-20	Interior	58	58	58	58	58	58	58	58	58	58	58	58	58	58	58	58	58	58	58	58	58	58	58	58	58	58	58	58	58	57	58	58	53	58	58	60	57	55	58
			Exposed	58	58	58	58	58	58	58	58	58	58	58	58	58	58	58	58	58	58	58	58	58	58	58	54	58	58	60	58	54	57	58	60	53	55	58	49	52	55	44
		20-27	Interior	65	65	65	65	65	65	65	65	65	65	65	65	65	65	65	65	65	65	65	65	65	65	65	65	65	65	64	64	64	61	63	62	58	62	60	55	61	57	52
			Exposed	65	65	65	65	65	65	65	65	65	65	65	65	65	65	65	65	65	64	65	65	62	65	63	59	65	59	54	64	56	51	63	52	58	62	60	55	60	57	52
		27-45	Interior	72	72	72	72	72	72	72	72	72	72	72	72	72	72	72	72	72	72	71	71	71	69	69	69	67	67	67	65	65	65	64	64	62	62	62	60	61	61	57
			Exposed	72	72	72	72	72	72	72	72	72	72	72	72	72	72	72	72	72	69	71	71	66	69	68	62	67	64	59	63	61	56	61	58	52	58	55	59	55	52	57
	D	0-7	Interior	61	61	61	61	61	61	61	61	61	61	61	61	61	61	61	61	61	61	61	61	61	61	61	61	61	61	59	61	61	55	61	60	52	61	58	59	61	54	56
			Exposed	61	61	61	61	61	61	61	61	61	61	61	61	61	61	61	61	61	59	61	61	57	61	61	52	61	57	59	61	53	55	58	60	52	55	57	47	52	54	41
		7-20	Interior	61	61	61	61	61	61	61	61	61	61	61	61	61	61	61	61	61	61	61	61	61	61	61	60	61	61	56	60	60	52	59	56	59	58	53	56	57	60	53
			Exposed	61	61	61	61	61	61	61	61	61	61	60	61	61	58	61	61	56	61	61	53	61	57	60	60	53	56	57	60	52	53	56	47	50	53	41	58	49	37
		20-27	Interior	68	68	68	68	68	68	68	68	68	68	68	68	68	68	68	68	68	68	68	68	68	68	68	64	66	64	60	65	61	57	64	59	53	62	55	50	61	52	58
			Exposed	68	68	68	68	68	68	68	68	67	68	68	64	68	66	62	68	64	60	68	62	58	68	59	54	66	55	60	64	51	57	61	58	53	58	55	50	55	52	44
		27-45	Interior	74	74	74	74	74	74	74	74	74	74	74	74	73	73	73	72	72	72	71	71	71	69	69	68	67	67	64	65	65	61	63	63	59	61	61	55	59	58	52
			Exposed	74	74	74	74	74	74	74	74	72	74	74	69	73	73	66	72	70	64	71	68	62	66	63	59	62	60	55	60	57	51	56	53	58	53	60	55	60	58	52
80	B	0-7	Interior	54	54	54	54	54	54	54	54	54	54	54	54	54	54	54	54	54	54	54	54	54	54	54	54	54	54	54	54	54	54	54	54	54	54	54	54	54	54	54
			Exposed	54	54	54	54	54	54	54	54	54	54	54	54	54	54	54	54	54	54	54	54	54	54	54	54	54	54	54	54	54	54	54	54	54	54	54	52	54	54	59
		7-20	Interior	55	55	55	55	55	55	55	55	55	55	55	55	55	55	55	55	55	55	55	55	55	55	55	55	55	55	55	55	55	55	55	55	55	55	55	55	55	55	55
			Exposed	55	55	55	55	55	55	55	55	55	55	55	55	55	55	55	55	55	55	55	55	55	55	55	55	55	55	55	55	55	55	55	55	52	55	55	59	55	53	56
		20-27	Interior	61	61	61	61	61	61	61	61	61	61	61	61	61	61	61	61	61	61	61	61	61	61	61	61	61	61	61	61	61	61	61	61	61	61	61	61	61	61	61
			Exposed	61	61	61	61	61	61	61	61	61	61	61	61	61	61	61	61	61	61	61	61	61	61	61	61	61	61	61	61	61	60	61	61	57	61	59	53	61	55	50
		27-45	Interior	82*	82*	82*	82*	82*	82*	82*	82*	82*	82*	82*	82*	82*	82*	82*	82*	82*	82*	82*	82*	82*	82*	82*	82*	82*	82*	82*	67	67	67	65	65	65	64	64	64	63	63	63
			Exposed	82*	82*	82*	82*	82*	82*	82*	82*	82*	82*	82*	82*	82*	82*	82*	82*	82*	82*	82*	82*	68	82*	68	68	68	68	68	67	67	64	65	65	61	64	63	59	63	61	55
	C	0-7	Interior	54	54	54	54	54	54	54	54	54	54	54	54	54	54	54	54	54	54	54	54	54	54	54	54	54	54	54	54	54	54	54	54	54	54	54	53	54	54	61
			Exposed	54	54	54	54	54	54	54	54	54	54	54	54	54	54	54	54	54	54	54	54	54	54	54	53	54	54	53	54	54	60	54	54	56	54	61	53	54	59	49
		7-20	Interior	55	55	55	55	55	55	55	55	55	55	55	55	55	55	55	55	55	55	55	55	55	55	55	55	55	55	55	55	55	55	55	55	53	55	55	60	54	54	58
			Exposed	55	55	55	55	55	55	55	55	55	55	55	55	55	55	55	55	55	55	55	55	55	55	55	54	55	55	60	55	54	57	55	60	53	55	58	49	52	55	44
		20-27	Interior	61	61	61	61	61	61	61	61	61	61	61	61	61	61	61	61	61	61	61	61	61	61	61	61	61	61	61	61	61	61	60	60	58	59	59	55	59	57	52
			Exposed	61	61	61	61	61	61	61	61	61	61	61	61	61	61	61	61	61	61	61	61	61	61	61	59	61	59	54	61	56	51	60	52	58	59	60	55	59	57	52
		27-45	Interior	82*	82*	82*	82*	82*	82*	82*	82*	82*	82*	82*	82*	82*	82*	82*	82*	82*	82*	82*	82*	67	66	66	66	64	64	64	63	63	63	61	61	61	60	60	60	59	59	57
			Exposed	82*	82*	82*	82*	82*	82*	82*	82*	68	82*	82*	68	82*	68	68	81*	68	68	67	67	66	66	66	62	64	64	59	63	61	56	61	58	52	58	55	59	55	52	57
	D	0-7	Interior	57	57	57	57	57	57	57	57	57	57	57	57	57	57	57	57	57	57	57	57	57	57	57	57	57	57	57	57	57	55	57	57	52	57	57	59	57	54	56
			Exposed	57	57	57	57	57	57	57	57	57	57	57	57	57	57	57	57	57	57	57	57	57	57	57	52	57	57	59	57	53	55	57	60	52	55	57	47	52	54	41
		7-20	Interior	58	58	58	58	58	58	58	58	58	58	58	58	58	58	58	58	58	58	58	58	58	58	58	58	58	58	56	58	58	52	57	56	59	56	53	56	55	60	53
			Exposed	58	58	58	58	58	58	58	58	58	58	58	58	58	58	58	58	58	56	58	58	53	58	57	60	58	53	56	57	60	52	53	56	47	50	53	41	58	49	37
		20-27	Interior	64	64	64	64	64	64	64	64	64	64	64	64	64	64	64	64	64	64	64	64	64	64	64	64	63	63	60	62	61	57	61	59	53	60	55	50	59	52	58
			Exposed	64	64	64	64	64	64	64	64	64	64	64	64	64	64	62	64	64	60	64	62	58	64	59	54	63	55	60	62	51	57	61	58	53	58	55	50	55	52	44
		27-45	Interior	71	71	71	71	71	71	71	71	71	71	71	71	70	70	70	69	69	69	68	68	68	66	66	66	64	64	64	63	63	61	61	61	59	59	59	55	58	58	52
			Exposed	71	71	71	71	71	71	71	71	71	71	71	69	70	70	66	69	69	64	68	68	62	66	63	59	62	60	55	60	57	51	56	53	58	53	60	55	60	58	52

* Cells with an astrisks indicates that the L-foot must be oriented in the Y- direction as indicated in the image.

10 Highlighted cell indicate 3-rail system span. Contact Unirac Engineering Services for support.

~~10~~ Highlighted cell with strikethrough indicate 3-rail system span and module clamp allowable capacity exceeds with 3-rails. 4-Rail system required. Contact Unirac Engineering Services for support.

UNIRAC

ASCE 7-22	II	30 ft	Ss = 3.00	23 sq.ft	LANDSCAPE	CROSS-SLOPE	NXT	NXT COMBO	Stronghold BUTYL Rafter #14S
Design Standard	Risk Category	Roof Height	Seismic	Module Area	Orientation	Rail Direction	Rail Type	Clamp	Attachment

SPAN TABLES

Maximum Allowable Rail Spans for Rooftop Solar Panels Parallel to the Roof Surface (inches)

Ground Snow Load (psf)	Wind Exposure Category	Roof Tilt Angle (deg)	Panel Exposure	Basic Wind Speed (mph)																																						
				90			95			100			105			110			115			120			130			140			150			160			170			180		
				Roof Wind Zone																																						
				1	2	3	1	2	3	1	2	3	1	2	3	1	2	3	1	2	3	1	2	3	1	2	3	1	2	3	1	2	3	1	2	3	1	2	3	1	2	3
90	B	0-7	Interior	51	51	51	51	51	51	51	51	51	51	51	51	51	51	51	51	51	51	51	51	51	51	51	51	51	51	51	51	51	51	51	51	51	51	51	51	51	51	51
			Exposed	51	51	51	51	51	51	51	51	51	51	51	51	51	51	51	51	51	51	51	51	51	51	51	51	51	51	51	51	51	51	51	51	51	51	51	51	51	51	59
		7-20	Interior	52	52	52	52	52	52	52	52	52	52	52	52	52	52	52	52	52	52	52	52	52	52	52	52	52	52	52	52	52	52	52	52	52	52	52	52	52	52	52
			Exposed	52	52	52	52	52	52	52	52	52	52	52	52	52	52	52	52	52	52	52	52	52	52	52	52	52	52	52	52	52	52	52	52	52	52	52	59	52	52	56
		20-27	Interior	58	58	58	58	58	58	58	58	58	58	58	58	58	58	58	58	58	58	58	58	58	58	58	58	58	58	58	58	58	58	58	58	58	58	58	58	58	58	58
			Exposed	58	58	58	58	58	58	58	58	58	58	58	58	58	58	58	58	58	58	58	58	58	58	58	58	58	58	58	58	58	57	58	58	53	58	55	50			
		27-45	Interior	69*	69*	69*	69*	69*	69*	69*	69*	69*	69*	69*	69*	69*	69*	69*	69*	69*	69*	69*	69*	69*	69*	69*	69*	72*	72*	72*	70*	70*	70*	72*	72*	72*	73*	73*	62	61	61	61
			Exposed	69*	69*	69*	69*	69*	69*	69*	69*	69*	69*	69*	69*	69*	69*	69*	69*	69*	69*	69*	69*	69*	69*	69*	69*	72*	72*	65	70*	70*	64	63	63	61	62	62	59	61	61	55
	C	0-7	Interior	51	51	51	51	51	51	51	51	51	51	51	51	51	51	51	51	51	51	51	51	51	51	51	51	51	51	51	51	51	51	51	51	51	51	51	51	51	51	61
			Exposed	51	51	51	51	51	51	51	51	51	51	51	51	51	51	51	51	51	51	51	51	51	51	51	51	51	51	51	51	51	60	51	51	56	51	61	53	51	59	49
		7-20	Interior	52	52	52	52	52	52	52	52	52	52	52	52	52	52	52	52	52	52	52	52	52	52	52	52	52	52	52	52	52	52	52	52	52	52	52	60	52	52	58
			Exposed	52	52	52	52	52	52	52	52	52	52	52	52	52	52	52	52	52	52	52	52	52	52	52	52	52	52	60	52	52	57	52	60	53	52	58	49	52	55	44
		20-27	Interior	58	58	58	58	58	58	58	58	58	58	58	58	58	58	58	58	58	58	58	58	58	58	58	58	58	58	58	58	58	58	58	58	58	57	57	55	56	56	52
			Exposed	58	58	58	58	58	58	58	58	58	58	58	58	58	58	58	58	58	58	58	58	58	58	58	58	58	58	54	58	56	51	58	52	58	57	60	55	56	57	52
		27-45	Interior	69*	69*	69*	69*	69*	69*	69*	69*	69*	69*	69*	69*	69*	69*	69*	69*	69*	69*	71*	71*	71*	73*	73*	73*	71*	71*	62	61	61	61	59	59	59	58	58	58	57	57	57
			Exposed	69*	69*	69*	69*	69*	69*	69*	69*	69*	69*	69*	69*	69*	69*	69*	69*	69*	69*	71*	71*	65	72*	63	62	62	62	59	61	61	56	59	58	52	58	55	59	55	52	57
	D	0-7	Interior	54	54	54	54	54	54	54	54	54	54	54	54	54	54	54	54	54	54	54	54	54	54	54	54	54	54	54	54	54	54	54	54	52	54	54	59	54	54	56
			Exposed	54	54	54	54	54	54	54	54	54	54	54	54	54	54	54	54	54	54	54	54	54	54	54	52	54	54	59	54	53	55	54	60	52	54	57	47	52	54	41
		7-20	Interior	54	54	54	54	54	54	54	54	54	54	54	54	54	54	54	54	54	54	54	54	54	54	54	54	54	54	54	54	54	52	54	54	59	54	53	56	53	60	53
			Exposed	54	54	54	54	54	54	54	54	54	54	54	54	54	54	54	54	54	54	54	54	53	54	54	60	54	53	56	54	60	52	53	56	47	50	53	41	58	49	37
		20-27	Interior	60	60	60	60	60	60	60	60	60	60	60	60	60	60	60	60	60	60	60	60	60	60	60	60	60	60	60	60	60	57	59	59	53	58	55	50	57	52	58
			Exposed	60	60	60	60	60	60	60	60	60	60	60	60	60	60	60	60	60	60	60	60	58	60	59	54	60	55	60	60	51	57	59	58	53	58	55	50	55	52	44
		27-45	Interior	78*	78*	78*	78*	78*	78*	78*	78*	78*	78*	78*	78*	78*	78*	78*	80*	80*	66	65	65	65	64	64	64	62	62	62	61	61	61	59	59	59	58	58	55	56	56	52
			Exposed	78*	78*	78*	78*	78*	68	78*	78*	68	78*	68	68	78*	67	66	66	66	64	65	65	62	64	63	59	62	60	55	60	57	51	56	53	58	53	60	55	60	58	52
100	B	0-7	Interior	49	49	49	49	49	49	49	49	49	49	49	49	49	49	49	49	49	49	49	49	49	49	49	49	49	49	49	49	49	49	49	49	49	49	49	49	49	49	49
			Exposed	49	49	49	49	49	49	49	49	49	49	49	49	49	49	49	49	49	49	49	49	49	49	49	49	49	49	49	49	49	49	49	49	49	49	49	49	49	49	59
		7-20	Interior	49	49	49	49	49	49	49	49	49	49	49	49	49	49	49	49	49	49	49	49	49	49	49	49	49	49	49	49	49	49	49	49	49	49	49	49	49	49	49
			Exposed	49	49	49	49	49	49	49	49	49	49	49	49	49	49	49	49	49	49	49	49	49	49	49	49	49	49	49	49	49	49	49	49	49	49	49	59	49	49	56
		20-27	Interior	55	55	55	55	55	55	55	55	55	55	55	55	55	55	55	55	55	55	55	55	55	55	55	55	55	55	55	55	55	55	55	55	55	55	55	55	55	55	55
			Exposed	55	55	55	55	55	55	55	55	55	55	55	55	55	55	55	55	55	55	55	55	55	55	55	55	55	55	55	55	55	55	55	55	55	55	55	53	55	55	50
		27-45	Interior	65*	65*	65*	65*	65*	65*	65*	65*	65*	65*	65*	65*	65*	65*	65*	65*	65*	65*	65*	65*	65*	65*	65*	65*	65*	65*	65*	65*	65*	65*	64*	64*	64*	63*	63*	63*	65*	65*	65*
			Exposed	65*	65*	65*	65*	65*	65*	65*	65*	65*	65*	65*	65*	65*	65*	65*	65*	65*	65*	65*	65*	65*	65*	65*	65*	65*	65*	65*	64*	64*	64*	63*	63*	61	65*	63*	59	63*	59	55
	C	0-7	Interior	49	49	49	49	49	49	49	49	49	49	49	49	49	49	49	49	49	49	49	49	49	49	49	49	49	49	49	49	49	49	49	49	49	49	49	49	49	49	60
			Exposed	49	49	49	49	49	49	49	49	49	49	49	49	49	49	49	49	49	49	49	49	49	49	49	49	49	49	49	49	49	60	49	49	56	49	60	53	49	59	49
		7-20	Interior	49	49	49	49	49	49	49	49	49	49	49	49	49	49	49	49	49	49	49	49	49	49	49	49	49	49	49	49	49	49	49	49	49	49	49	60	49	49	58
			Exposed	49	49	49	49	49	49	49	49	49	49	49	49	49	49	49	49	49	49	49	49	49	49	49	49	49	49	60	49	49	57	49	60	53	49	58	49	49	55	44
		20-27	Interior	55	55	55	55	55	55	55	55	55	55	55	55	55	55	55	55	55	55	55	55	55	55	55	55	55	55	55	55	55	55	55	55	55	55	55	55	54	54	52
			Exposed	55	55	55	55	55	55	55	55	55	55	55	55	55	55	55	55	55	55	55	55	55	55	55	55	55	55	54	55	55	51	55	52	58	55	60	55	54	57	52
		27-45	Interior	65*	65*	65*	65*	65*	65*	65*	65*	65*	65*	65*	65*	65*	65*	65*	65*	65*	65*	65*	65*	65*	64*	64*	64*	63*	63*	63*	64*	64*	64*	65*	65*	57	56	56	56	55	55	55
			Exposed	65*	65*	65*	65*	65*	65*	65*	65*	65*	65*	65*	65*	65*	65*	65*	65*	65*	65*	65*	65*	65*	64*	64*	61	63*	63*	59	63*	59	56	57	57	52	56	55	59	55	52	57
	D	0-7	Interior	51	51	51	51	51	51	51	51	51	51	51	51	51	51	51	51	51	51	51	51	51	51	51	51	51	51	51	51	51	51	51	51	51	51	51	59	51	51	56
			Exposed	51	51	51	51	51	51	51	51	51	51	51	51	51	51	51	51	51	51	51	51	51	51	51	51	51	51	59	51	51	55	51	60	52	51	57	47	51	54	41
		7-20	Interior	52	52	52	52	52	52	52	52	52	52	52	52	52	52	52	52	52	52	52	52	52	52	52	52	52	52	52	52	52	52	52	52	59	52	52	56	51	60	53
			Exposed	52	52	52	52	52	52	52	52	52	52	52	52	52	52	52	52	52	52	52	52	52	52	52	60	52	52	56	52	60	52	52	56	47	50	53	41	58	49	37
		20-27	Interior	58	58	58	58	58	58	58	58	58	58	58	58	58	58	58	58	58	58	58	58	58	58	58	58	58	58	58	58	58	57	57	57	53	56	55	50	55	52	58
			Exposed	58	58	58	58	58	58	58	58	58	58	58	58	58	58	58	58	58	58	58	58	58	58	58	54	58	55	60	58	51	57	57	58	53	56	55	50	55	52	44
		27-45	Interior	69*	69*	69*	69*	69*	69*	69*	69*	69*	69*	69*	69*	71*	71*	71*	70*	70*	70*	73*	73*	73*	74*	74*	62	60	60	60	59	59	59	57	57	57	56	56	55	55	55	52
			Exposed	69*	69*	69*	69*	69*	69*	69*	69*	69*	69*	69*	69*	71*	71*	65	70*	70*	64	71*	63	62	62	62	59	60	60	55	59	57	51	56	53	58	53	60	55	60	58	52

* Cells with an astrisks indicates that the L-foot must be oriented in the Y- direction as indicated in the image.

10 Highlighted cell indicate 3-rail system span. Contact Unirac Engineering Services for support.

~~10~~ Highlighted cell with strikethrough indicate 3-rail system span and module clamp allowable capacity exceeds with 3-rails. 4-Rail system required. Contact Unirac Engineering Services for support.