Design Criteria for Span Tables:

Values in the maximum allowable rail span tables provided herein are subject to the following general criteria and additional criteria shown on individual span tables sheets. Values in span tables are based on the same engineering methodology and calculation algorithms used for U-Builder and are provided here for reference.

Building Assumptions

- Building Risk Category: II
- Mean Roof Height: 30 ft
- Roof Pitch: 0°-45°
- Site Elevation: 0 ft

Wind Design Assumptions

- Wind loads used are based on ASCE 7-16 Sec 29.4.4 with Provisions from SEAOC PV2-2017
- Exposure Category B, C, or D
- Basic Wind Speed = 90 – 180 mph
- Level terrain. Topographic factor, kzt = 1.0
- γE = 1.0 for 'Interior' spans, γE = 1.5 for 'Exposed' spans (ASCE 7-16, Fig. 29.4-7)

Snow Design Assumptions

- Ground Snow Load = 0-100 psf
- Exposure Factor coefficients of Partially Exposed condition
- Thermal Factor = 1.0
- Results based on uniform snow load

Seismic Design Assumptions

- 0.2-s Spectral Response Acceleration, SS ≤ 3
- S_S = 1.25 and 3 per criteria shown on individual span tables sheets.
- S_1 = 0.5
- Seismic site class D

Array Assumptions

- Module orientation and Rail direction per criteria shown on individual span tables sheets.
- Maximum module dimensions of 40.1" x 67" (~19 sq.ft, 47.65 lbs) and 41" x 80" (~23 sq.ft, 58.6 lbs) per criteria shown on individual span tables sheets.
- Minimum distance between modules and roof edge is at least twice the module height above roof surface.
- Modules are parallel to roof surface and maximum height above roof surface is 5" to 10" depending on attachment type.
- Gaps between module rows and columns is 0.25" in to 1" depending on clamp type.
- The most restrictive of all roof zone spans shall be used when any part of the module is attributed to that span.
- 'Exposed' spans as defined in ASCE 7-16 sec. 29.4.4 shall be used when any part of an exposed module or panel as is attributed to that span.

Span Tables

Zone should be considered as per ASCE 7-16, Fig. 30.3-2A to 30.3-2D

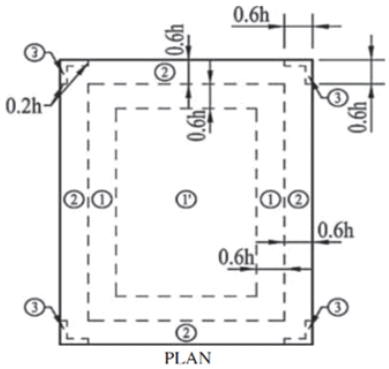

Gable Roofs θ ≤ 7°

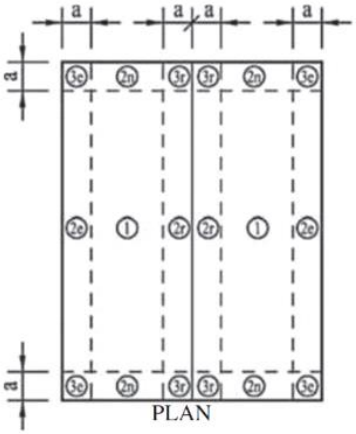

Gable Roofs 7°< θ ≤ 45°

Grouping of ASCE 7-16 Roof Zones (Gable and Flat)

- **Roof Tilt 0°-7°**
  - Roof Zone 1 = 1
  - Roof Zone 2 = 2
  - Roof Zone 3 = 3
- **Roof Tilt 7°-27°**
  - Roof Zone 1 = 1, 2e
  - Roof Zone 2 = 2n, 2r, 3e
  - Roof Zone 3 = 3r
- **Roof Tilt 27°-45°**
  - Roof Zone 1 = 1, 2e, 2r
  - Roof Zone 2 = 2n, 3r
  - Roof Zone 3 = 3e

Rails can be installed in these possible orientations.

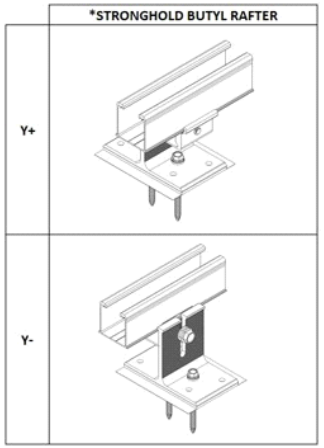

UNIRAC

ASCE 7-16	II	30 ft	Ss = 1.25	19 sq.ft	PORTRAIT	CROSS-SLOPE	NXT	NXT COMBO	Stronghold BUTYL Rafter #14S
Design Standard	Risk Category	Roof Height	Seismic	Module Area	Orientation	Rail Direction	Rail Type	Clamp	Attachment

SPAN TABLES

Maximum Allowable Rail Spans for Rooftop Solar Panels Parallel to the Roof Surface (inches)

Ground Snow Load (psf)	Wind Exposure Category	Roof Tilt Angle (deg)	Panel Exposure	Basic Wind Speed (mph) 90			95			100			105			110			115			120			130			140			150			160			170			180		
			Roof Wind Zone	1	2	3	1	2	3	1	2	3	1	2	3	1	2	3	1	2	3	1	2	3	1	2	3	1	2	3	1	2	3	1	2	3	1	2	3	1	2	3
0	B	0-7	Interior	86	86	86	86	86	86	86	86	83	86	86	79	86	86	76	86	83	73	86	80	71	85	75	66	80	71	63	76	67	59	72	64	55	68	61	51	65	58	43
			Exposed	86	86	76	86	82	73	86	79	70	86	76	67	83	73	64	80	70	62	77	68	60	72	64	55	68	60	50	64	56	41	61	52	36	58	46	32	54	40	42
		7-20	Interior	86	86	86	86	86	84	86	86	80	86	83	77	86	80	74	86	77	71	83	74	69	78	69	64	73	65	60	69	61	56	66	58	51	63	53	43	60	48	38
			Exposed	86	79	74	85	76	70	81	73	67	78	70	65	75	67	62	73	65	60	70	62	58	66	58	52	63	53	42	60	45	36	56	38	32	52	34	42	47	30	38
		20-27	Interior	87	87	87	87	87	87	87	87	87	87	87	84	87	86	81	87	82	78	87	79	75	87	74	70	82	70	66	77	66	62	74	62	59	70	59	54	67	56	50
			Exposed	87	85	81	87	81	77	87	78	74	87	75	71	84	72	68	81	69	65	79	67	63	74	63	59	70	59	54	66	54	46	63	49	38	60	41	32	57	36	28
		27-45	Interior	87	87	87	87	87	87	87	87	87	87	87	87	87	87	84	87	87	81	87	86	78	86	80	73	81	75	69	76	71	65	72	68	62	68	64	59	65	62	55
			Exposed	87	87	84	87	87	81	87	84	77	87	81	74	83	78	71	80	75	69	77	73	66	72	68	62	68	64	59	64	61	54	61	57	48	57	53	40	53	47	35
	C	0-7	Interior	86	86	78	86	85	75	86	81	72	86	78	69	85	75	66	82	72	64	79	70	62	74	66	58	70	62	53	66	59	45	63	54	39	60	50	34	57	43	30
			Exposed	85	75	66	81	72	63	78	69	61	75	66	58	72	64	55	70	62	52	67	60	48	63	55	39	60	49	33	55	41	44	51	36	38	43	31	34	38	42	30
		7-20	Interior	86	82	76	86	78	72	84	75	69	80	72	66	77	69	64	75	66	62	72	64	60	68	60	54	64	55	47	61	50	39	58	41	34	54	36	30	51	32	40
			Exposed	77	69	64	74	66	61	71	63	59	69	61	55	66	58	52	64	55	46	62	52	41	58	42	34	54	36	30	48	31	39	41	41	34	36	36	30	32	32	~~27~~
		20-27	Interior	87	87	83	87	84	79	87	80	76	87	77	73	87	74	70	84	71	67	81	69	65	76	64	61	72	61	56	68	57	51	65	52	42	62	45	35	59	39	30
			Exposed	87	74	70	83	71	67	80	68	64	77	65	61	74	63	59	71	60	56	69	58	53	65	52	42	61	43	35	58	37	29	54	33	36	50	43	31	44	39	~~27~~
		27-45	Interior	87	87	87	87	87	83	87	87	79	87	83	76	86	80	73	83	77	71	80	75	68	74	70	64	70	66	60	66	62	56	62	59	52	59	55	44	56	51	38
			Exposed	86	80	73	82	76	70	78	73	67	75	70	65	72	68	62	69	65	60	67	63	58	63	59	52	59	55	43	54	49	36	48	41	31	40	36	40	36	32	35
	D	0-7	Interior	86	83	73	86	79	70	86	76	67	83	73	64	79	70	62	77	68	60	74	65	57	69	61	52	65	58	43	62	53	37	59	47	32	55	40	43	51	36	38
			Exposed	79	70	62	76	67	59	73	64	56	70	62	53	67	60	48	65	57	42	63	54	39	59	48	33	54	39	42	49	34	37	41	30	32	36	40	~~28~~	32	35	~~25~~
		7-20	Interior	85	76	71	81	73	67	78	70	65	75	67	62	72	64	60	70	62	57	68	60	54	64	55	45	60	48	38	57	40	33	53	35	43	47	30	38	41	41	34
			Exposed	72	64	60	69	61	56	67	59	52	64	55	47	62	52	41	60	47	37	58	41	34	53	35	44	46	30	37	40	39	33	35	34	~~28~~	30	30	~~25~~	41	~~27~~	~~22~~
		20-27	Interior	87	82	77	87	78	74	87	75	71	84	72	68	81	69	65	78	66	63	76	64	60	71	60	55	67	56	50	64	51	39	61	42	33	58	37	28	54	33	37
			Exposed	81	69	65	77	66	62	74	63	59	72	61	56	69	58	53	67	55	49	65	52	42	61	42	34	57	36	28	53	31	35	47	41	29	41	37	~~25~~	36	32	~~22~~
		27-45	Interior	87	87	81	87	84	77	87	81	74	83	78	71	80	75	68	77	72	66	74	70	64	69	65	60	65	62	55	61	58	51	58	54	41	54	48	36	48	41	31
			Exposed	80	75	68	76	71	65	73	68	63	70	66	60	67	63	58	65	61	55	62	59	52	59	54	42	53	47	35	45	39	29	38	34	38	34	30	33	30	41	28
10	B	0-7	Interior	72	72	72	72	72	72	72	72	72	72	72	72	72	72	72	72	72	72	72	72	71	72	72	66	72	71	63	72	67	59	72	64	55	68	61	51	65	58	43
			Exposed	72	72	72	72	72	72	72	72	70	72	72	67	72	72	64	72	70	62	72	68	60	72	64	55	68	60	50	64	56	41	61	52	36	58	46	32	54	40	42
		7-20	Interior	72	72	72	72	72	72	72	72	72	72	72	72	72	72	72	72	72	71	72	72	69	72	69	64	72	65	60	69	61	56	66	58	51	63	53	43	60	48	38
			Exposed	72	72	72	72	72	70	72	72	67	72	70	65	72	67	62	72	65	60	70	62	58	66	58	52	63	53	42	60	45	36	56	38	32	52	34	42	47	30	38
		20-27	Interior	83	83	83	83	83	83	83	83	83	83	83	83	83	83	81	83	82	78	83	79	75	83	74	70	82	70	66	77	66	62	74	62	59	70	59	54	67	56	50
			Exposed	83	83	81	83	81	77	83	78	74	83	75	71	83	72	68	81	69	65	79	67	63	74	63	59	70	59	54	66	54	46	63	49	38	60	41	32	57	36	28
		27-45	Interior	86	86	86	86	86	86	86	86	86	86	86	86	86	86	84	86	86	81	86	86	78	86	80	73	81	75	69	76	71	65	72	68	62	68	64	59	65	62	55
			Exposed	86	86	84	86	86	81	86	84	77	86	81	74	83	78	71	80	75	69	77	73	66	72	68	62	68	64	59	64	61	54	61	57	48	57	53	40	53	47	35
	C	0-7	Interior	72	72	72	72	72	72	72	72	72	72	72	69	72	72	66	72	72	64	72	70	62	72	66	58	70	62	53	66	59	45	63	54	39	60	50	34	57	43	30
			Exposed	72	72	66	72	72	63	72	69	61	72	66	58	72	64	55	70	62	52	67	60	48	63	55	39	60	49	33	55	41	44	51	36	38	43	31	34	38	42	30
		7-20	Interior	72	72	72	72	72	72	72	72	69	72	72	66	72	69	64	72	66	62	72	64	60	68	60	54	64	55	47	61	50	39	58	41	34	54	36	30	51	32	40
			Exposed	72	69	64	72	66	61	71	63	59	69	61	55	66	58	52	64	55	46	62	52	41	58	42	34	54	36	30	48	31	39	41	41	34	36	36	30	32	32	~~27~~
		20-27	Interior	83	83	83	83	83	79	83	80	76	83	77	73	83	74	70	83	71	67	81	69	65	76	64	61	72	61	56	68	57	51	65	52	42	62	45	35	59	39	30
			Exposed	83	74	70	83	71	67	80	68	64	77	65	61	74	63	59	71	60	56	69	58	53	65	52	42	61	43	35	58	37	29	54	33	36	50	43	31	44	39	~~27~~
		27-45	Interior	86	86	86	86	86	83	86	86	79	86	83	76	86	80	73	83	77	71	80	75	68	74	70	64	70	66	60	66	62	56	62	59	52	59	55	44	56	51	38
			Exposed	86	80	73	82	76	70	78	73	67	75	70	65	72	68	62	69	65	60	67	63	58	63	59	52	59	55	43	54	49	36	48	41	31	40	36	40	36	32	35
	D	0-7	Interior	72	72	72	72	72	70	72	72	67	72	72	64	72	70	62	72	68	60	72	65	57	69	61	52	65	58	43	62	53	37	59	47	32	55	40	43	51	36	38
			Exposed	72	70	62	72	67	59	72	64	56	70	62	53	67	60	48	65	57	42	63	54	39	59	48	33	54	39	42	49	34	37	41	30	32	36	40	~~28~~	32	35	~~25~~
		7-20	Interior	72	72	71	72	72	67	72	70	65	72	67	62	72	64	60	70	62	57	68	60	54	64	55	45	60	48	38	57	40	33	53	35	43	47	30	38	41	41	34
			Exposed	72	64	60	69	61	56	67	59	52	64	55	47	62	52	41	60	47	37	58	41	34	53	35	44	46	30	37	40	39	33	35	34	~~28~~	30	30	~~25~~	41	~~27~~	~~22~~
		20-27	Interior	84	82	77	84	78	74	84	75	71	84	72	68	81	69	65	78	66	63	76	64	60	71	60	55	67	56	50	64	51	39	61	42	33	58	37	28	54	33	37
			Exposed	81	69	65	77	66	62	74	63	59	72	61	56	69	58	53	67	55	49	65	52	42	61	42	34	57	36	28	53	31	35	47	41	29	41	37	~~25~~	36	32	~~22~~
		27-45	Interior	87	87	81	87	84	77	87	81	74	83	78	71	80	75	68	77	72	66	74	70	64	69	65	60	65	62	55	61	58	51	58	54	41	54	48	36	48	41	31
			Exposed	80	75	68	76	71	65	73	68	63	70	66	60	67	63	58	65	61	55	62	59	52	59	54	42	53	47	35	45	39	29	38	34	38	34	30	33	30	41	28
20	B	0-7	Interior	60	60	60	60	60	60	60	60	60	60	60	60	60	60	60	60	60	60	60	60	60	60	60	60	60	60	60	60	60	59	60	60	55	60	60	51	60	58	43
			Exposed	60	60	60	60	60	60	60	60	60	60	60	60	60	60	60	60	60	60	60	60	60	60	60	55	60	60	50	60	56	41	60	52	36	58	46	32	54	40	42
		7-20	Interior	61	61	61	61	61	61	61	61	61	61	61	61	61	61	61	61	61	61	61	61	61	61	61	61	61	61	60	61	61	56	61	58	51	61	53	43	60	48	38
			Exposed	61	61	61	61	61	61	61	61	61	61	61	61	61	61	61	61	61	60	61	61	58	61	58	52	61	53	42	60	45	36	56	38	32	52	34	42	47	30	38
		20-27	Interior	74	74	74	74	74	74	74	74	74	74	74	74	74	74	74	74	74	74	74	74	74	74	74	70	74	70	66	74	66	62	74	62	59	70	59	54	67	56	50
			Exposed	74	74	74	74	74	74	74	74	74	74	74	71	74	72	68	74	69	65	74	67	63	74	63	59	70	59	54	66	54	46	63	49	38	60	41	32	57	36	28
		27-45	Interior	78	78	78	78	78	78	78	78	78	78	78	78	78	78	78	78	78	78	78	78	78	78	78	73	78	75	69	76	71	65	72	68	62	68	64	59	65	62	55
			Exposed	78	78	78	78	78	78	78	78	77	78	78	74	78	78	71	78	75	69	77	73	66	72	68	62	68	64	59	64	61	54	61	57	48	57	53	40	53	47	35
	C	0-7	Interior	60	60	60	60	60	60	60	60	60	60	60	60	60	60	60	60	60	60	60	60	60	60	60	58	60	60	53	60	59	45	60	54	39	60	50	34	57	43	30
			Exposed	60	60	60	60	60	60	60	60	60	60	60	58	60	60	55	60	60	52	60	60	48	60	55	39	60	49	33	55	41	44	51	36	38	43	31	34	38	42	30
		7-20	Interior	61	61	61	61	61	61	61	61	61	61	61	61	61	61	61	61	61	61	61	61	60	61	60	54	61	55	47	61	50	39	58	41	34	54	36	30	51	32	40
			Exposed	61	61	61	61	61	61	61	61	59	61	61	55	61	58	52	61	55	46	61	52	41	58	42	34	54	36	30	48	31	39	41	41	34	36	36	30	32	32	~~27~~
		20-27	Interior	74	74	74	74	74	74	74	74	74	74	74	73	74	74	70	74	71	67	74	69	65	74	64	61	72	61	56	68	57	51	65	52	42	62	45	35	59	39	30
			Exposed	74	74	70	74	71	67	74	68	64	74	65	61	74	63	59	71	60	56	69	58	53	65	52	42	61	43	35	58	37	29	54	33	36	50	43	31	44	39	~~27~~
		27-45	Interior	78	78	78	78	78	78	78	78	78	78	78	76	78	78	73	78	77	71	78	75	68	74	70	64	70	66	60	66	62	56	62	59	52	59	55	44	56	51	38
			Exposed	78	78	73	78	76	70	78	73	67	75	70	65	72	68	62	69	65	60	67	63	58	63	59	52	59	55	43	54	49	36	48	41	31	40	36	40	36	32	35
	D	0-7	Interior	60	60	60	60	60	60	60	60	60	60	60	60	60	60	60	60	60	60	60	60	57	60	60	52	60	58	43	60	53	37	59	47	32	55	40	43	51	36	38
			Exposed	60	60	60	60	60	59	60	60	56	60	60	53	60	60	48	60	57	42	60	54	39	59	48	33	54	39	42	49	34	37	41	30	32	36	40	~~28~~	32	35	~~25~~
		7-20	Interior	61	61	61	61	61	61	61	61	61	61	61	61	61	61	60	61	61	57	61	60	54	61	55	45	60	48	38	57	40	33	53	35	43	47	30	38	41	41	34
			Exposed	61	61	60	61	61	56	61	59	52	61	55	47	61	52	41	60	47	37	58	41	34	53	35	44	46	30	37	40	39	33	35	34	~~28~~	30	30	~~25~~	41	~~27~~	~~22~~
		20-27	Interior	75	75	75	75	75	74	75	75	71	75	72	68	75	69	65	75	66	63	75	64	60	71	60	55	67	56	50	64	51	39	61	42	33	58	37	28	54	33	37
			Exposed	75	69	65	75	66	62	74	63	59	72	61	56	69	58	53	67	55	49	65	52	42	61	42	34	57	36	28	53	31	35	47	41	29	41	37	~~25~~	36	32	~~22~~
		27-45	Interior	79	79	79	79	79	77	79	79	74	79	78	71	79	75	68	77	72	66	74	70	64	69	65	60	65	62	55	61	58	51	58	54	41	54	48	36	48	41	31
			Exposed	79	75	68	76	71	65	73	68	63	70	66	60	67	63	58	65	61	55	62	59	52	59	54	42	53	47	35	45	39	29	38	34	38	34	30	33	30	41	28

*	Cells with an astrisks indicates that the L-foot must be oriented in the Y- direction as indicated in the image.
10 [blue]	Highlighted cell indicate 3-rail system span. Contact Unirac Engineering Services for support.
~~10~~ [orange]	Highlighted cell with strikethrough indicate 3-rail system span and module clamp allowable capacity exceeds with 3-rails. 4-Rail system required. Contact Unirac Engineering Services for support.

UNIRAC

ASCE 7-16	II	30 ft	Ss = 1.25	19 sq.ft	PORTRAIT	CROSS-SLOPE	NXT	NXT COMBO	Stronghold BUTYL Rafter #14S
Design Standard	Risk Category	Roof Height	Seismic	Module Area	Orientation	Rail Direction	Rail Type	Clamp	Attachment

SPAN TABLES

Maximum Allowable Rail Spans for Rooftop Solar Panels Parallel to the Roof Surface (inches)

Ground Snow Load (psf)	Wind Exposure Category	Roof Tilt Angle (deg)	Panel Exposure	Basic Wind Speed (mph)																																						
				90			95			100			105			110			115			120			130			140			150			160			170			180		
				Roof Wind Zone																																						
				1	2	3	1	2	3	1	2	3	1	2	3	1	2	3	1	2	3	1	2	3	1	2	3	1	2	3	1	2	3	1	2	3	1	2	3	1	2	3
30	B	0-7	Interior	59	59	59	59	59	59	59	59	59	59	59	59	59	59	59	59	59	59	59	59	59	59	59	59	59	59	59	59	59	59	59	59	55	59	59	51	59	58	43
			Exposed	59	59	59	59	59	59	59	59	59	59	59	59	59	59	59	59	59	59	59	59	59	59	59	55	59	59	50	59	56	41	59	52	36	58	46	32	54	40	42
		7-20	Interior	61	61	61	61	61	61	61	61	61	61	61	61	61	61	61	61	61	61	61	61	61	61	61	61	61	61	60	61	61	56	61	58	51	61	53	43	60	48	38
			Exposed	61	61	61	61	61	61	61	61	61	61	61	61	61	61	61	61	61	60	61	61	58	61	58	52	61	53	42	60	45	36	56	38	32	52	34	42	47	30	38
		20-27	Interior	67	67	67	67	67	67	67	67	67	67	67	67	67	67	67	67	67	67	67	67	67	67	67	67	67	67	66	67	66	62	67	62	59	67	59	54	67	56	50
			Exposed	67	67	67	67	67	67	67	67	67	67	67	67	67	67	67	67	67	65	67	67	63	67	63	59	67	59	54	66	54	46	63	49	38	60	41	32	57	36	28
		27-45	Interior	71	71	71	71	71	71	71	71	71	71	71	71	71	71	71	71	71	71	71	71	71	71	71	71	71	71	69	70	70	65	68	68	62	66	64	59	64	62	55
			Exposed	71	71	71	71	71	71	71	71	71	71	71	71	71	71	71	71	71	69	71	71	66	71	68	62	68	64	59	64	61	54	61	57	48	57	53	40	53	47	35
	C	0-7	Interior	59	59	59	59	59	59	59	59	59	59	59	59	59	59	59	59	59	59	59	59	59	59	59	58	59	59	53	59	59	45	59	54	39	59	50	34	57	43	30
			Exposed	59	59	59	59	59	59	59	59	59	59	59	58	59	59	55	59	59	52	59	59	48	59	55	39	59	49	33	55	41	44	51	36	38	43	31	34	38	42	30
		7-20	Interior	61	61	61	61	61	61	61	61	61	61	61	61	61	61	61	61	61	61	61	61	60	61	60	54	61	55	47	61	50	39	58	41	34	54	36	30	51	32	40
			Exposed	61	61	61	61	61	61	61	61	59	61	61	55	61	58	52	61	55	46	61	52	41	58	42	34	54	36	30	48	31	39	41	41	34	36	36	30	32	32	~~27~~
		20-27	Interior	67	67	67	67	67	67	67	67	67	67	67	67	67	67	67	67	67	67	67	67	65	67	64	61	67	61	56	67	57	51	65	52	42	62	45	35	59	39	30
			Exposed	67	67	67	67	67	67	67	67	64	67	65	61	67	63	59	67	60	56	67	58	53	65	52	42	61	43	35	58	37	29	54	33	36	50	43	31	44	39	~~27~~
		27-45	Interior	71	71	71	71	71	71	71	71	71	71	71	71	71	71	71	71	71	71	71	71	68	70	70	64	67	66	60	65	62	56	62	59	52	59	55	44	56	51	38
			Exposed	71	71	71	71	71	70	71	71	67	71	70	65	71	68	62	69	65	60	67	63	58	63	59	52	59	55	43	54	49	36	48	41	31	40	36	40	36	32	35
	D	0-7	Interior	60	60	60	60	60	60	60	60	60	60	60	60	60	60	60	60	60	60	60	60	57	60	60	52	60	58	43	60	53	37	59	47	32	55	40	43	51	36	38
			Exposed	60	60	60	60	60	59	60	60	56	60	60	53	60	60	48	60	57	42	60	54	39	59	48	33	54	39	42	49	34	37	41	30	32	36	40	~~28~~	32	35	~~25~~
		7-20	Interior	61	61	61	61	61	61	61	61	61	61	61	61	61	61	60	61	61	57	61	60	54	61	55	45	60	48	38	57	40	33	53	35	43	47	30	38	41	41	34
			Exposed	61	61	60	61	61	56	61	59	52	61	55	47	61	52	41	60	47	37	58	41	34	53	35	44	46	30	37	40	39	33	35	34	~~28~~	30	30	~~25~~	41	~~27~~	~~22~~
		20-27	Interior	69	69	69	69	69	69	69	69	69	69	69	68	69	69	65	69	66	63	69	64	60	69	60	55	67	56	50	64	51	39	61	42	33	58	37	28	54	33	37
			Exposed	69	69	65	69	66	62	69	63	59	69	61	56	69	58	53	67	55	49	65	52	42	61	42	34	57	36	28	53	31	35	47	41	29	41	37	~~25~~	36	32	~~22~~
		27-45	Interior	73	73	73	73	73	73	73	73	73	73	73	71	73	73	68	73	72	66	71	70	64	68	65	60	65	62	55	61	58	51	58	54	41	54	48	36	48	41	31
			Exposed	73	73	68	73	71	65	73	68	63	70	66	60	67	63	58	65	61	55	62	59	52	59	54	42	53	47	35	45	39	29	38	34	38	34	30	33	30	41	28
40	B	0-7	Interior	54	54	54	54	54	54	54	54	54	54	54	54	54	54	54	54	54	54	54	54	54	54	54	54	54	54	54	54	54	54	54	54	54	54	54	51	54	54	43
			Exposed	54	54	54	54	54	54	54	54	54	54	54	54	54	54	54	54	54	54	54	54	54	54	54	54	54	54	50	54	54	41	54	52	36	54	46	32	54	40	42
		7-20	Interior	56	56	56	56	56	56	56	56	56	56	56	56	56	56	56	56	56	56	56	56	56	56	56	56	56	56	56	56	56	56	56	56	51	56	53	43	56	48	38
			Exposed	56	56	56	56	56	56	56	56	56	56	56	56	56	56	56	56	56	56	56	56	56	56	56	52	56	53	42	56	45	36	56	38	32	52	34	42	47	30	38
		20-27	Interior	62	62	62	62	62	62	62	62	62	62	62	62	62	62	62	62	62	62	62	62	62	62	62	62	62	62	62	62	62	62	62	62	59	62	59	54	62	56	50
			Exposed	62	62	62	62	62	62	62	62	62	62	62	62	62	62	62	62	62	62	62	62	62	62	62	59	62	59	54	62	54	46	62	49	38	60	41	32	57	36	28
		27-45	Interior	66	66	66	66	66	66	66	66	66	66	66	66	66	66	66	66	66	66	66	66	66	66	66	66	66	66	66	65	65	65	63	63	62	62	62	59	60	60	55
			Exposed	66	66	66	66	66	66	66	66	66	66	66	66	66	66	66	66	66	66	66	66	66	66	66	62	66	64	59	64	61	54	61	57	48	57	53	40	53	47	35
	C	0-7	Interior	54	54	54	54	54	54	54	54	54	54	54	54	54	54	54	54	54	54	54	54	54	54	54	54	54	54	53	54	54	45	54	54	39	54	50	34	54	43	30
			Exposed	54	54	54	54	54	54	54	54	54	54	54	54	54	54	54	54	54	52	54	54	48	54	54	39	54	49	33	54	41	44	51	36	38	43	31	34	38	42	30
		7-20	Interior	56	56	56	56	56	56	56	56	56	56	56	56	56	56	56	56	56	56	56	56	56	56	56	54	56	55	47	56	50	39	55	41	34	54	36	30	51	32	40
			Exposed	56	56	56	56	56	56	56	56	56	56	56	56	56	56	52	56	55	46	56	52	41	56	42	34	54	36	30	48	31	39	41	41	34	36	36	30	32	32	~~27~~
		20-27	Interior	62	62	62	62	62	62	62	62	62	62	62	62	62	62	62	62	62	62	62	62	62	62	62	61	62	61	56	62	57	51	61	52	42	60	45	35	58	39	30
			Exposed	62	62	62	62	62	62	62	62	62	62	62	61	62	62	59	62	60	56	62	58	53	62	52	42	61	43	35	58	37	29	54	33	36	50	43	31	44	39	~~27~~
		27-45	Interior	66	66	66	66	66	66	66	66	66	66	66	66	66	66	66	66	66	66	66	66	66	65	65	64	62	62	60	60	60	56	58	58	52	56	55	44	54	51	38
			Exposed	66	66	66	66	66	66	66	66	66	66	66	65	66	66	62	66	65	60	66	63	58	63	59	52	59	55	43	54	49	36	48	41	31	40	36	40	36	32	35
	D	0-7	Interior	56	56	56	56	56	56	56	56	56	56	56	56	56	56	56	56	56	56	56	56	56	56	56	52	56	56	43	56	53	37	56	47	32	55	40	43	51	36	38
			Exposed	56	56	56	56	56	56	56	56	56	56	56	53	56	56	48	56	56	42	56	54	39	56	48	33	54	39	42	49	34	37	41	30	32	36	40	~~28~~	32	35	~~25~~
		7-20	Interior	58	58	58	58	58	58	58	58	58	58	58	58	58	58	58	58	58	57	58	58	54	58	55	45	58	48	38	57	40	33	53	35	43	47	30	38	41	41	34
			Exposed	58	58	58	58	58	56	58	58	52	58	55	47	58	52	41	58	47	37	58	41	34	53	35	44	46	30	37	40	39	33	35	34	~~28~~	30	30	~~25~~	41	~~27~~	~~22~~
		20-27	Interior	64	64	64	64	64	64	64	64	64	64	64	64	64	64	64	64	64	63	64	64	60	64	60	55	64	56	50	63	51	39	61	42	33	58	37	28	54	33	37
			Exposed	64	64	64	64	64	62	64	63	59	64	61	56	64	58	53	64	55	49	64	52	42	61	42	34	57	36	28	53	31	35	47	41	29	41	37	~~25~~	36	32	~~22~~
		27-45	Interior	68	68	68	68	68	68	68	68	68	68	68	68	68	68	68	67	67	66	66	66	64	64	64	60	61	61	55	59	58	51	57	54	41	54	48	36	48	41	31
			Exposed	68	68	68	68	68	65	68	68	63	68	66	60	67	63	58	65	61	55	62	59	52	59	54	42	53	47	35	45	39	29	38	34	38	34	30	33	30	41	28
50	B	0-7	Interior	49	49	49	49	49	49	49	49	49	49	49	49	49	49	49	49	49	49	49	49	49	49	49	49	49	49	49	49	49	49	49	49	49	49	49	49	49	49	43
			Exposed	49	49	49	49	49	49	49	49	49	49	49	49	49	49	49	49	49	49	49	49	49	49	49	49	49	49	49	49	49	41	49	49	36	49	46	32	49	40	42
		7-20	Interior	51	51	51	51	51	51	51	51	51	51	51	51	51	51	51	51	51	51	51	51	51	51	51	51	51	51	51	51	51	51	51	51	51	51	51	43	51	48	38
			Exposed	51	51	51	51	51	51	51	51	51	51	51	51	51	51	51	51	51	51	51	51	51	51	51	51	51	51	42	51	45	36	51	38	32	51	34	42	47	30	38
		20-27	Interior	57	57	57	57	57	57	57	57	57	57	57	57	57	57	57	57	57	57	57	57	57	57	57	57	57	57	57	57	57	57	57	57	57	57	57	54	57	56	50
			Exposed	57	57	57	57	57	57	57	57	57	57	57	57	57	57	57	57	57	57	57	57	57	57	57	57	57	57	54	57	54	46	57	49	38	57	41	32	57	36	28
		27-45	Interior	62	62	62	62	62	62	62	62	62	62	62	62	62	62	62	62	62	62	62	62	62	62	62	62	62	62	62	61	61	61	60	60	60	58	58	58	57	57	55
			Exposed	62	62	62	62	62	62	62	62	62	62	62	62	62	62	62	62	62	62	62	62	62	62	62	62	62	62	59	61	61	54	60	57	48	57	53	40	53	47	35
	C	0-7	Interior	49	49	49	49	49	49	49	49	49	49	49	49	49	49	49	49	49	49	49	49	49	49	49	49	49	49	49	49	49	45	49	49	39	49	49	34	49	43	30
			Exposed	49	49	49	49	49	49	49	49	49	49	49	49	49	49	49	49	49	49	49	49	48	49	49	39	49	49	33	49	41	44	49	36	38	43	31	34	38	42	30
		7-20	Interior	51	51	51	51	51	51	51	51	51	51	51	51	51	51	51	51	51	51	51	51	51	51	51	51	51	51	47	51	50	39	51	41	34	50	36	30	49	32	40
			Exposed	51	51	51	51	51	51	51	51	51	51	51	51	51	51	51	51	51	46	51	51	41	51	42	34	51	36	30	48	31	39	41	41	34	36	36	30	32	32	~~27~~
		20-27	Interior	57	57	57	57	57	57	57	57	57	57	57	57	57	57	57	57	57	57	57	57	57	57	57	57	57	57	56	57	57	51	57	52	42	56	45	35	55	39	30
			Exposed	57	57	57	57	57	57	57	57	57	57	57	57	57	57	57	57	57	56	57	57	53	57	52	42	57	43	35	57	37	29	54	33	36	50	43	31	44	39	~~27~~
		27-45	Interior	62	62	62	62	62	62	62	62	62	62	62	62	62	62	62	62	62	62	62	62	62	60	60	60	59	59	59	57	57	56	55	55	52	54	54	44	52	51	38
			Exposed	62	62	62	62	62	62	62	62	62	62	62	62	62	62	62	62	62	60	62	62	58	60	59	52	59	55	43	54	49	36	48	41	31	40	36	40	36	32	35
	D	0-7	Interior	51	51	51	51	51	51	51	51	51	51	51	51	51	51	51	51	51	51	51	51	51	51	51	51	51	51	43	51	51	37	51	47	32	51	40	43	51	36	38
			Exposed	51	51	51	51	51	51	51	51	51	51	51	51	51	51	48	51	51	42	51	51	39	51	48	33	51	39	42	49	34	37	41	30	32	36	40	~~28~~	32	35	~~25~~
		7-20	Interior	53	53	53	53	53	53	53	53	53	53	53	53	53	53	53	53	53	53	53	53	53	53	53	45	53	48	38	52	40	33	51	35	43	47	30	38	41	41	34
			Exposed	53	53	53	53	53	53	53	53	52	53	53	47	53	52	41	53	47	37	53	41	34	53	35	44	46	30	37	40	39	33	35	34	~~28~~	30	30	~~25~~	41	~~27~~	~~22~~
		20-27	Interior	59	59	59	59	59	59	59	59	59	59	59	59	59	59	59	59	59	59	59	59	59	59	59	55	59	56	50	58	51	39	57	42	33	56	37	28	54	33	37
			Exposed	59	59	59	59	59	59	59	59	59	59	59	56	59	58	53	59	55	49	59	52	42	59	42	34	57	36	28	53	31	35	47	41	29	41	37	~~25~~	36	32	~~22~~
		27-45	Interior	64	64	64	64	64	64	64	64	64	64	64	64	64	64	64	63	63	63	62	62	62	60	60	60	58	58	55	56	56	51	54	54	41	52	48	36	48	41	31
			Exposed	64	64	64	64	64	64	64	64	63	64	64	60	64	63	58	63	61	55	62	59	52	59	54	42	53	47	35	45	39	29	38	34	38	34	30	33	30	41	28

*	Cells with an astrisks indicates that the L-foot must be oriented in the Y- direction as indicated in the image.
10	Highlighted cell indicate 3-rail system span. Contact Unirac Engineering Services for support.
~~10~~	Highlighted cell with strikethrough indicate 3-rail system span and module clamp allowable capacity exceeds with 3-rails. 4-Rail system required. Contact Unirac Engineering Services for support.

UNIRAC

ASCE 7-16	II	30 ft	Ss = 1.25	19 sq.ft	PORTRAIT	CROSS-SLOPE	NXT	NXT COMBO	Stronghold BUTYL Rafter #14S
Design Standard	Risk Category	Roof Height	Seismic	Module Area	Orientation	Rail Direction	Rail Type	Clamp	Attachment

SPAN TABLES

Maximum Allowable Rail Spans for Rooftop Solar Panels Parallel to the Roof Surface (inches)

Ground Snow Load (psf)	Wind Exposure Category	Roof Tilt Angle (deg)	Panel Exposure	Basic Wind Speed (mph)																																						
				90			95			100			105			110			115			120			130			140			150			160			170			180		
				Roof Wind Zone																																						
				1	2	3	1	2	3	1	2	3	1	2	3	1	2	3	1	2	3	1	2	3	1	2	3	1	2	3	1	2	3	1	2	3	1	2	3	1	2	3
60	B	0-7	Interior	45	45	45	45	45	45	45	45	45	45	45	45	45	45	45	45	45	45	45	45	45	45	45	45	45	45	45	45	45	45	45	45	45	45	45	45	45	45	43
			Exposed	45	45	45	45	45	45	45	45	45	45	45	45	45	45	45	45	45	45	45	45	45	45	45	45	45	45	45	45	45	41	45	45	36	45	45	32	45	40	42
		7-20	Interior	47	47	47	47	47	47	47	47	47	47	47	47	47	47	47	47	47	47	47	47	47	47	47	47	47	47	47	47	47	47	47	47	47	47	47	43	47	47	38
			Exposed	47	47	47	47	47	47	47	47	47	47	47	47	47	47	47	47	47	47	47	47	47	47	47	47	47	47	42	47	45	36	47	38	32	47	34	42	47	30	38
		20-27	Interior	54	54	54	54	54	54	54	54	54	54	54	54	54	54	54	54	54	54	54	54	54	54	54	54	54	54	54	54	54	54	54	54	54	54	54	54	54	54	50
			Exposed	54	54	54	54	54	54	54	54	54	54	54	54	54	54	54	54	54	54	54	54	54	54	54	54	54	54	54	54	54	46	54	49	38	54	41	32	54	36	28
		27-45	Interior	61*	61*	61*	61*	61*	61*	61*	61*	61*	61*	61*	61*	61*	61*	61*	61*	61*	61*	61*	61*	61*	61*	61*	61*	61*	61*	61*	63*	63*	63*	61*	61*	61*	62*	62*	55	54	54	54
			Exposed	61*	61*	61*	61*	61*	61*	61*	61*	61*	61*	61*	61*	61*	61*	61*	61*	61*	61*	61*	61*	61*	61*	61*	61*	61*	61*	59	63*	61*	54	61*	56	48	55	53	40	53	47	35
	C	0-7	Interior	45	45	45	45	45	45	45	45	45	45	45	45	45	45	45	45	45	45	45	45	45	45	45	45	45	45	45	45	45	45	45	45	39	45	45	34	45	43	30
			Exposed	45	45	45	45	45	45	45	45	45	45	45	45	45	45	45	45	45	45	45	45	45	45	45	39	45	45	33	45	41	44	45	36	38	43	31	34	38	42	30
		7-20	Interior	47	47	47	47	47	47	47	47	47	47	47	47	47	47	47	47	47	47	47	47	47	47	47	47	47	47	47	47	47	39	47	41	34	47	36	30	46	32	40
			Exposed	47	47	47	47	47	47	47	47	47	47	47	47	47	47	47	47	47	46	47	47	41	47	42	34	47	36	30	47	31	39	41	41	34	36	36	30	32	32	27
		20-27	Interior	54	54	54	54	54	54	54	54	54	54	54	54	54	54	54	54	54	54	54	54	54	54	54	54	54	54	54	54	54	51	53	52	42	52	45	35	51	39	30
			Exposed	54	54	54	54	54	54	54	54	54	54	54	54	54	54	54	54	54	54	54	54	53	54	52	42	54	43	35	54	37	29	53	33	36	50	43	31	44	39	27
		27-45	Interior	61*	61*	61*	61*	61*	61*	61*	61*	61*	61*	61*	61*	61*	61*	61*	61*	61*	61*	61*	61*	61*	62*	62*	62*	63*	63*	56	54	54	54	53	53	52	51	51	44	50	50	38
			Exposed	61*	61*	61*	61*	61*	61*	61*	61*	61*	61*	61*	61*	61*	61*	61*	61*	61*	59	61*	61*	58	62*	57	52	56	55	43	54	49	36	48	41	31	40	36	40	36	32	35
	D	0-7	Interior	47	47	47	47	47	47	47	47	47	47	47	47	47	47	47	47	47	47	47	47	47	47	47	47	47	47	43	47	47	37	47	47	32	47	40	43	47	36	38
			Exposed	47	47	47	47	47	47	47	47	47	47	47	47	47	47	47	47	47	42	47	47	39	47	47	33	47	39	42	47	34	37	41	30	32	36	40	28	32	35	25
		7-20	Interior	49	49	49	49	49	49	49	49	49	49	49	49	49	49	49	49	49	49	49	49	49	49	49	45	49	48	38	49	40	33	48	35	43	47	30	38	41	41	34
			Exposed	49	49	49	49	49	49	49	49	49	49	49	47	49	49	41	49	47	37	49	41	34	49	35	44	46	30	37	40	39	33	35	34	28	30	30	25	41	27	22
		20-27	Interior	56	56	56	56	56	56	56	56	56	56	56	56	56	56	56	56	56	56	56	56	56	56	56	55	56	56	50	55	51	39	54	42	33	53	37	28	52	33	37
			Exposed	56	56	56	56	56	56	56	56	56	56	56	56	56	56	56	53	56	55	49	56	52	42	56	42	34	56	36	28	53	31	35	47	41	29	41	37	25	36	32	22
		27-45	Interior	68*	68*	68*	68*	68*	68*	68*	68*	68*	68*	68*	68*	68*	68*	68*	68*	68*	60	59	59	59	57	57	57	55	55	55	54	54	51	52	52	41	50	48	36	48	41	31
			Exposed	68*	68*	68*	68*	68*	61	68*	68*	61	68*	61	60	61	61	58	60	60	55	59	59	52	57	54	42	53	47	35	45	39	29	38	34	38	34	30	33	30	41	28
70	B	0-7	Interior	42	42	42	42	42	42	42	42	42	42	42	42	42	42	42	42	42	42	42	42	42	42	42	42	42	42	42	42	42	42	42	42	42	42	42	42	42	42	42
			Exposed	42	42	42	42	42	42	42	42	42	42	42	42	42	42	42	42	42	42	42	42	42	42	42	42	42	42	42	42	42	41	42	42	36	42	42	32	42	40	42
		7-20	Interior	43	43	43	43	43	43	43	43	43	43	43	43	43	43	43	43	43	43	43	43	43	43	43	43	43	43	43	43	43	43	43	43	43	43	43	43	43	43	38
			Exposed	43	43	43	43	43	43	43	43	43	43	43	43	43	43	43	43	43	43	43	43	43	43	43	43	43	43	42	43	43	36	43	38	32	43	34	42	43	30	38
		20-27	Interior	50	50	50	50	50	50	50	50	50	50	50	50	50	50	50	50	50	50	50	50	50	50	50	50	50	50	50	50	50	50	50	50	50	50	50	50	50	50	50
			Exposed	50	50	50	50	50	50	50	50	50	50	50	50	50	50	50	50	50	50	50	50	50	50	50	50	50	50	50	50	50	46	50	49	38	50	41	32	50	36	28
		27-45	Interior	56*	56*	56*	56*	56*	56*	56*	56*	56*	56*	56*	56*	56*	56*	56*	56*	56*	56*	56*	56*	56*	56*	56*	56*	56*	56*	56*	55*	55*	55*	54*	54*	54*	55*	55*	55*	53*	53*	53*
			Exposed	56*	56*	56*	56*	56*	56*	56*	56*	56*	56*	56*	56*	56*	56*	56*	56*	56*	56*	56*	56*	56*	56*	56*	56*	56*	56*	56*	55*	55*	54*	54*	54*	48	55*	53*	40	53*	47	35
	C	0-7	Interior	42	42	42	42	42	42	42	42	42	42	42	42	42	42	42	42	42	42	42	42	42	42	42	42	42	42	42	42	42	42	42	42	39	42	42	34	42	42	30
			Exposed	42	42	42	42	42	42	42	42	42	42	42	42	42	42	42	42	42	42	42	42	42	42	42	39	42	42	33	42	41	44	42	36	38	42	31	34	38	42	30
		7-20	Interior	43	43	43	43	43	43	43	43	43	43	43	43	43	43	43	43	43	43	43	43	43	43	43	43	43	43	43	43	43	39	43	41	34	43	36	30	43	32	40
			Exposed	43	43	43	43	43	43	43	43	43	43	43	43	43	43	43	43	43	43	43	43	41	43	42	34	43	36	30	43	31	39	41	41	34	36	36	30	32	32	27
		20-27	Interior	50	50	50	50	50	50	50	50	50	50	50	50	50	50	50	50	50	50	50	50	50	50	50	50	50	50	50	50	50	50	50	50	42	50	45	35	49	39	30
			Exposed	50	50	50	50	50	50	50	50	50	50	50	50	50	50	50	50	50	50	50	50	50	50	50	42	50	43	35	50	37	29	50	33	36	50	43	31	44	39	27
		27-45	Interior	56*	56*	56*	56*	56*	56*	56*	56*	56*	56*	56*	56*	56*	56*	56*	56*	56*	56*	56*	56*	56*	54*	54*	54*	55*	55*	55*	54*	54*	54*	54*	54*	50	53*	53*	44	48	48	38
			Exposed	56*	56*	56*	56*	56*	56*	56*	56*	56*	56*	56*	56*	56*	56*	56*	56*	56*	52	55*	55*	43	54*	49	36	48	41	31	40	36	40	36	32	35						
	D	0-7	Interior	44	44	44	44	44	44	44	44	44	44	44	44	44	44	44	44	44	44	44	44	44	44	44	44	44	44	43	44	44	37	44	44	32	44	40	43	44	36	38
			Exposed	44	44	44	44	44	44	44	44	44	44	44	44	44	44	44	44	44	42	44	44	39	44	44	33	44	39	42	44	34	37	41	30	32	36	40	28	32	35	25
		7-20	Interior	46	46	46	46	46	46	46	46	46	46	46	46	46	46	46	46	46	46	46	46	46	46	46	45	46	46	38	46	40	33	46	35	43	45	30	38	41	41	34
			Exposed	46	46	46	46	46	46	46	46	46	46	46	46	46	41	46	46	37	46	41	34	46	35	44	46	30	37	40	39	33	35	34	28	30	30	25	41	27	22
		20-27	Interior	53	53	53	53	53	53	53	53	53	53	53	53	53	53	53	53	53	53	53	53	53	53	53	53	53	53	50	52	51	39	51	42	33	50	37	28	49	33	37
			Exposed	53	53	53	53	53	53	53	53	53	53	53	53	53	53	53	53	53	49	53	52	42	53	42	34	53	36	28	52	31	35	47	41	29	41	37	25	36	32	22
		27-45	Interior	60*	60*	60*	60*	60*	60*	60*	60*	60*	60*	60*	60*	60*	60*	60*	59*	59*	59*	59*	59*	59*	59*	59*	59*	61*	61*	53	51	51	51	50	50	41	48	48	36	47	41	31
			Exposed	60*	60*	60*	60*	60*	60*	60*	60*	60*	60*	60*	60*	60*	60*	58	59*	59*	55	59*	59*	52	59*	54	42	53	47	35	45	39	29	38	34	38	34	30	33	30	41	28
80	B	0-7	Interior	39	39	39	39	39	39	39	39	39	39	39	39	39	39	39	39	39	39	39	39	39	39	39	39	39	39	39	39	39	39	39	39	39	39	39	39	39	39	39
			Exposed	39	39	39	39	39	39	39	39	39	39	39	39	39	39	39	39	39	39	39	39	39	39	39	39	39	39	39	39	39	39	39	39	36	39	39	32	39	39	42
		7-20	Interior	41	41	41	41	41	41	41	41	41	41	41	41	41	41	41	41	41	41	41	41	41	41	41	41	41	41	41	41	41	41	41	41	41	41	41	41	41	41	38
			Exposed	41	41	41	41	41	41	41	41	41	41	41	41	41	41	41	41	41	41	41	41	41	41	41	41	41	41	41	41	41	36	41	38	32	41	34	42	41	30	38
		20-27	Interior	50*	50*	50*	50*	50*	50*	50*	50*	50*	50*	50*	50*	50*	50*	50*	50*	50*	50*	50*	50*	50*	50*	50*	50*	50*	50*	50*	50*	50*	50*	50*	50*	50*	50*	50*	50*	50*	50*	50*
			Exposed	50*	50*	50*	50*	50*	50*	50*	50*	50*	50*	50*	50*	50*	50*	50*	50*	50*	50*	50*	50*	50*	50*	50*	50*	50*	50*	50*	50*	50*	46	50*	47	38	50*	41	32	50*	36	28
		27-45	Interior	53*	53*	53*	53*	53*	53*	53*	53*	53*	53*	53*	53*	53*	53*	53*	53*	53*	53*	53*	53*	53*	53*	53*	53*	53*	53*	53*	52*	52*	52*	51*	51*	51*	50*	50*	50*	49*	49*	49*
			Exposed	53*	53*	53*	53*	53*	53*	53*	53*	53*	53*	53*	53*	53*	53*	53*	53*	53*	53*	53*	53*	53*	53*	53*	53*	53*	53*	53*	52*	52*	52*	51*	51*	49*	50*	50*	40	49*	47*	35
	C	0-7	Interior	39	39	39	39	39	39	39	39	39	39	39	39	39	39	39	39	39	39	39	39	39	39	39	39	39	39	39	39	39	39	39	39	39	39	39	34	39	39	30
			Exposed	39	39	39	39	39	39	39	39	39	39	39	39	39	39	39	39	39	39	39	39	39	39	39	39	39	39	33	39	39	44	39	36	38	39	31	34	38	42	30
		7-20	Interior	41	41	41	41	41	41	41	41	41	41	41	41	41	41	41	41	41	41	41	41	41	41	41	41	41	41	41	41	41	39	41	41	34	41	36	30	41	32	40
			Exposed	41	41	41	41	41	41	41	41	41	41	41	41	41	41	41	41	41	41	41	41	41	41	41	34	41	36	30	41	31	39	41	41	34	36	36	30	32	32	27
		20-27	Interior	50*	50*	50*	50*	50*	50*	50*	50*	50*	50*	50*	50*	50*	50*	50*	50*	50*	50*	50*	50*	50*	50*	50*	50*	50*	50*	50*	50*	50*	50*	50*	50*	42	50*	45	35	47	39	30
			Exposed	50*	50*	50*	50*	50*	50*	50*	50*	50*	50*	50*	50*	50*	50*	50*	50*	50*	50*	50*	50*	50*	50*	50*	42	50*	43	35	50*	37	29	50*	33	36	47	43	31	44	39	27
		27-45	Interior	53*	53*	53*	53*	53*	53*	53*	53*	53*	53*	53*	53*	53*	53*	53*	53*	53*	53*	53*	53*	53*	52*	52*	52*	51*	51*	51*	49*	49*	49*	48*	48*	48*	49*	49*	44	48*	48*	38
			Exposed	53*	53*	53*	53*	53*	53*	53*	53*	53*	53*	53*	53*	53*	53*	53*	53*	53*	53*	53*	53*	53*	52*	52*	52*	51*	51*	43	49*	49*	36	48*	41	31	40	36	40	36	32	35
	D	0-7	Interior	41	41	41	41	41	41	41	41	41	41	41	41	41	41	41	41	41	41	41	41	41	41	41	41	41	41	41	41	41	37	41	41	32	41	40	43	41	36	38
			Exposed	41	41	41	41	41	41	41	41	41	41	41	41	41	41	41	41	41	41	41	41	39	41	41	33	41	39	42	41	34	37	41	30	32	36	40	28	32	35	25
		7-20	Interior	43	43	43	43	43	43	43	43	43	43	43	43	43	43	43	43	43	43	43	43	43	43	43	43	43	43	38	43	40	33	43	35	43	43	30	38	41	41	34
			Exposed	43	43	43	43	43	43	43	43	43	43	43	43	43	41	43	43	37	43	41	34	43	35	44	43	30	37	40	39	33	35	34	28	30	30	25	41	27	22
		20-27	Interior	50	50	50	50	50	50	50	50	50	50	50	50	50	50	50	50	50	50	50	50	50	50	50	50	50	50	50	50	50	39	49	42	33	48	37	28	47	33	37
			Exposed	50	50	50	50	50	50	50	50	50	50	50	50	50	50	50	50	50	49	50	50	42	50	42	34	50	36	28	50	31	35	47	41	29	41	37	25	36	32	22
		27-45	Interior	55*	55*	55*	55*	55*	55*	55*	55*	55*	55*	55*	55*	55*	55*	55*	54*	54*	54*	54*	54*	54*	55*	55*	55*	53*	53*	53*	53*	53*	49	52*	52*	41	47	47	36	45	41	31
			Exposed	55*	55*	55*	55*	55*	55*	55*	55*	55*	55*	55*	55*	55*	55*	55*	54*	54*	54*	54*	54*	52*	55*	54*	42	53*	47	35	45	39	29	38	34	38	34	30	33	30	41	28

* Cells with an astrisks indicates that the L-foot must be oriented in the Y- direction as indicated in the image.

10 Highlighted cell indicate 3-rail system span. Contact Unirac Engineering Services for support.

~~10~~ Highlighted cell with strikethrough indicate 3-rail system span and module clamp allowable capacity exceeds with 3-rails. 4-Rail system required. Contact Unirac Engineering Services for support.

UNIRAC

ASCE 7-16	II	30 ft	Ss = 1.25	19 sq.ft	PORTRAIT	CROSS-SLOPE	NXT	NXT COMBO	Stronghold BUTYL Rafter #14S
Design Standard	Risk Category	Roof Height	Seismic	Module Area	Orientation	Rail Direction	Rail Type	Clamp	Attachment

SPAN TABLES

Maximum Allowable Rail Spans for Rooftop Solar Panels Parallel to the Roof Surface (inches)

Ground Snow Load (psf)	Wind Exposure Category	Roof Tilt Angle (deg)	Panel Exposure	Basic Wind Speed (mph)																																								
				90			95			100			105			110			115			120			130			140			150			160			170			180		
				Roof Wind Zone																																								
				1	2	3	1	2	3	1	2	3	1	2	3	1	2	3	1	2	3	1	2	3	1	2	3	1	2	3	1	2	3	1	2	3	1	2	3	1	2	3
90	B	0-7	Interior	37	37	37	37	37	37	37	37	37	37	37	37	37	37	37	37	37	37	37	37	37	37	37	37	37	37	37	37	37	37	37	37	37	37	37	37	37	37	37	37	37
			Exposed	37	37	37	37	37	37	37	37	37	37	37	37	37	37	37	37	37	37	37	37	37	37	37	37	37	37	37	37	37	37	37	37	36	37	37	32	37	37	42
		7-20	Interior	38	38	38	38	38	38	38	38	38	38	38	38	38	38	38	38	38	38	38	38	38	38	38	38	38	38	38	38	38	38	38	38	38	38	38	38	38	38	38
			Exposed	38	38	38	38	38	38	38	38	38	38	38	38	38	38	38	38	38	38	38	38	38	38	38	38	38	38	38	38	38	36	38	38	32	38	34	42	38	30	38
		20-27	Interior	47*	47*	47*	47*	47*	47*	47*	47*	47*	47*	47*	47*	47*	47*	47*	47*	47*	47*	47*	47*	47*	47*	47*	47*	47*	47*	47*	47*	47*	47*	47*	47*	47*	47*	47*	47*	47*	47*	47*
			Exposed	47*	47*	47*	47*	47*	47*	47*	47*	47*	47*	47*	47*	47*	47*	47*	47*	47*	47*	47*	47*	47*	47*	47*	47*	47*	47*	47*	47*	47*	46*	47*	47*	38	47*	41	32	47*	36	28
		27-45	Interior	50*	50*	50*	50*	50*	50*	50*	50*	50*	50*	50*	50*	50*	50*	50*	50*	50*	50*	50*	50*	50*	50*	50*	50*	50*	50*	50*	50*	50*	50*	49*	49*	49*	48*	48*	48*	47*	47*	47*
			Exposed	50*	50*	50*	50*	50*	50*	50*	50*	50*	50*	50*	50*	50*	50*	50*	50*	50*	50*	50*	50*	50*	50*	50*	50*	50*	50*	50*	50*	50*	50*	49*	49*	48*	48*	48*	40	47*	47*	35
	C	0-7	Interior	37	37	37	37	37	37	37	37	37	37	37	37	37	37	37	37	37	37	37	37	37	37	37	37	37	37	37	37	37	37	37	37	37	37	37	34	37	37	30
			Exposed	37	37	37	37	37	37	37	37	37	37	37	37	37	37	37	37	37	37	37	37	37	37	37	33	37	37	44	37	36	38	37	31	34	37	42	30
		7-20	Interior	38	38	38	38	38	38	38	38	38	38	38	38	38	38	38	38	38	38	38	38	38	38	38	38	38	38	38	38	38	34	38	36	30	38	32	40
			Exposed	38	38	38	38	38	38	38	38	38	38	38	38	38	38	38	38	38	38	38	38	38	38	38	34	38	36	30	38	31	39	38	41	34	36	36	30	32	32	27
		20-27	Interior	47*	47*	47*	47*	47*	47*	47*	47*	47*	47*	47*	47*	47*	47*	47*	47*	47*	47*	47*	47*	47*	47*	47*	47*	47*	47*	47*	47*	47*	47*	47*	47*	42	47*	45*	35	47*	39	30
			Exposed	47*	47*	47*	47*	47*	47*	47*	47*	47*	47*	47*	47*	47*	47*	47*	47*	47*	47*	47*	47*	47*	47*	47*	42	47*	43	35	47*	37	29	47*	33	36	47*	43	31	44*	39	27
		27-45	Interior	50*	50*	50*	50*	50*	50*	50*	50*	50*	50*	50*	50*	50*	50*	50*	50*	50*	50*	50*	50*	50*	50*	50*	50*	49*	49*	49*	48*	48*	48*	47*	47*	47*	45*	45*	44*	44*	44*	38
			Exposed	50*	50*	50*	50*	50*	50*	50*	50*	50*	50*	50*	50*	50*	50*	50*	50*	50*	50*	50*	50*	50*	50*	50*	50*	49*	49*	43*	48*	48*	36	47*	41	31	40	36	40	36	32	35
	D	0-7	Interior	39	39	39	39	39	39	39	39	39	39	39	39	39	39	39	39	39	39	39	39	39	39	39	39	39	39	39	39	39	37	39	39	32	39	39	43	39	36	38
			Exposed	39	39	39	39	39	39	39	39	39	39	39	39	39	39	39	39	39	39	39	39	39	39	39	33	39	39	42	39	34	37	39	30	32	36	40	28	32	35	25
		7-20	Interior	40	40	40	40	40	40	40	40	40	40	40	40	40	40	40	40	40	40	40	40	40	40	40	40	40	40	38	40	40	33	40	35	43	40	30	38	40	41	34
			Exposed	40	40	40	40	40	40	40	40	40	40	40	40	40	40	40	40	40	37	40	40	34	40	35	44	40	30	37	40	39	33	35	34	28	30	30	25	41	27	22
		20-27	Interior	50*	50*	50*	50*	50*	50*	50*	50*	50*	50*	50*	50*	50*	50*	50*	50*	50*	50*	50*	50*	50*	50*	50*	50*	50*	50*	50*	50*	50*	39	49*	42	33	46	37	28	45	33	37
			Exposed	50*	50*	50*	50*	50*	50*	50*	50*	50*	50*	50*	50*	50*	50*	50*	50*	50*	49*	50*	50*	42	50*	42	34	50*	36	28	50*	31	35	47	41	29	41	37	25	36	32	22
		27-45	Interior	53*	53*	53*	53*	53*	53*	53*	53*	53*	53*	53*	53*	53*	53*	53*	52*	52*	52*	52*	52*	52*	50*	50*	50*	49*	49*	49*	48*	48*	48*	48*	48*	41	47*	47*	36	47*	41	31
			Exposed	53*	53*	53*	53*	53*	53*	53*	53*	53*	53*	53*	53*	53*	53*	53*	52*	52*	52*	52*	52*	52*	50*	50*	42	49*	47*	35	45	39	29	38	34	38	34	30	33	30	41	28
100	B	0-7	Interior	35	35	35	35	35	35	35	35	35	35	35	35	35	35	35	35	35	35	35	35	35	35	35	35	35	35	35	35	35	35	35	35	35	35	35	35	35	35	35
			Exposed	35	35	35	35	35	35	35	35	35	35	35	35	35	35	35	35	35	35	35	35	35	35	35	35	35	35	35	35	35	35	35	35	35	35	35	32	35	35	42
		7-20	Interior	37	37	37	37	37	37	37	37	37	37	37	37	37	37	37	37	37	37	37	37	37	37	37	37	37	37	37	37	37	37	37	37	37	37	37	37	37	37	37
			Exposed	37	37	37	37	37	37	37	37	37	37	37	37	37	37	37	37	37	37	37	37	37	37	37	37	37	37	37	37	37	36	37	37	32	37	34	42	37	30	38
		20-27	Interior	43*	43*	43*	43*	43*	43*	43*	43*	43*	43*	43*	43*	43*	43*	43*	43*	43*	43*	43*	43*	43*	43*	43*	43*	43*	43*	43*	43*	43*	43*	43*	43*	43*	43*	43*	43*	43*	43*	43*
			Exposed	43*	43*	43*	43*	43*	43*	43*	43*	43*	43*	43*	43*	43*	43*	43*	43*	43*	43*	43*	43*	43*	43*	43*	43*	43*	43*	43*	43*	43*	43*	43*	43*	38	43*	41*	32	43*	36	28
		27-45	Interior	47*	47*	47*	47*	47*	47*	47*	47*	47*	47*	47*	47*	47*	47*	47*	47*	47*	47*	47*	47*	47*	47*	47*	47*	47*	47*	47*	47*	47*	47*	47*	47*	47*	47*	47*	47*	46*	46*	46*
			Exposed	47*	47*	47*	47*	47*	47*	47*	47*	47*	47*	47*	47*	47*	47*	47*	47*	47*	47*	47*	47*	47*	47*	47*	47*	47*	47*	47*	47*	47*	47*	47*	47*	47*	47*	47*	40*	46*	46*	35
	C	0-7	Interior	35	35	35	35	35	35	35	35	35	35	35	35	35	35	35	35	35	35	35	35	35	35	35	35	35	35	35	35	35	35	35	35	35	35	35	34	35	35	30
			Exposed	35	35	35	35	35	35	35	35	35	35	35	35	35	35	35	35	35	35	35	35	35	35	35	33	35	35	43	35	35	38	35	31	34	35	42	30
		7-20	Interior	37	37	37	37	37	37	37	37	37	37	37	37	37	37	37	37	37	37	37	37	37	37	37	37	37	37	37	37	37	37	37	37	34	37	36	30	37	32	40
			Exposed	37	37	37	37	37	37	37	37	37	37	37	37	37	37	37	37	37	37	37	37	34	37	36	30	37	31	39	37	41	34	36	36	30	32	32	27
		20-27	Interior	43*	43*	43*	43*	43*	43*	43*	43*	43*	43*	43*	43*	43*	43*	43*	43*	43*	43*	43*	43*	43*	43*	43*	43*	43*	43*	43*	43*	43*	42*	43*	43*	42*	43*	43*	35	43*	39	30
			Exposed	43*	43*	43*	43*	43*	43*	43*	43*	43*	43*	43*	43*	43*	43*	43*	43*	43*	43*	43*	43*	43*	43*	43*	42*	43*	43*	35	43*	37	29	43*	33	36	43*	43	31	43*	39	27
		27-45	Interior	47*	47*	47*	47*	47*	47*	47*	47*	47*	47*	47*	47*	47*	47*	47*	47*	47*	47*	47*	47*	47*	47*	47*	47*	47*	47*	47*	46*	46*	46*	45*	45*	45*	44*	44*	44*	43*	43*	38*
			Exposed	47*	47*	47*	47*	47*	47*	47*	47*	47*	47*	47*	47*	47*	47*	47*	47*	47*	47*	47*	47*	47*	47*	47*	43*	46*	46*	36	45*	41*	31	40*	36	40	36	32	35			
	D	0-7	Interior	37	37	37	37	37	37	37	37	37	37	37	37	37	37	37	37	37	37	37	37	37	37	37	37	37	37	37	37	37	37	37	37	32	37	37	43	37	36	38
			Exposed	37	37	37	37	37	37	37	37	37	37	37	37	37	37	37	37	37	37	37	37	37	37	37	33	37	37	42	37	34	37	37	30	32	36	40	28	32	35	25
		7-20	Interior	38	38	38	38	38	38	38	38	38	38	38	38	38	38	38	38	38	38	38	38	38	38	38	38	38	38	38	38	38	33	38	35	43	38	30	38	38	41	34
			Exposed	38	38	38	38	38	38	38	38	38	38	38	38	38	38	38	38	38	37	38	38	34	38	35	44	38	30	37	38	39	33	35	34	28	30	30	25	41	27	22
		20-27	Interior	47*	47*	47*	47*	47*	47*	47*	47*	47*	47*	47*	47*	47*	47*	47*	47*	47*	47*	47*	47*	47*	47*	47*	47*	47*	47*	47*	47*	47*	39	47*	42	33	46*	37	28	45*	33	37
			Exposed	47*	47*	47*	47*	47*	47*	47*	47*	47*	47*	47*	47*	47*	47*	47*	47*	47*	47*	47*	47*	42	47*	42	34	47*	36	28	47*	31	35	47*	41	29	41	37	25	36	32	22
		27-45	Interior	50*	50*	50*	50*	50*	50*	50*	50*	50*	50*	50*	50*	50*	50*	50*	50*	50*	50*	50*	50*	50*	49*	49*	49*	47*	47*	47*	46*	46*	46*	45*	45*	42*	44*	44*	36	43*	41	31
			Exposed	50*	50*	50*	50*	50*	50*	50*	50*	50*	50*	50*	50*	50*	50*	50*	50*	50*	50*	50*	50*	50*	49*	49*	42*	47*	47*	35	45*	39	29	38	34	38	34	30	33	30	41	28

* Cells with an astrisks indicates that the L-foot must be oriented in the Y- direction as indicated in the image.

10 Highlighted cell indicate 3-rail system span. Contact Unirac Engineering Services for support.

~~10~~ Highlighted cell with strikethrough indicate 3-rail system span and module clamp allowable capacity exceeds with 3-rails. 4-Rail system required. Contact Unirac Engineering Services for support.

UNIRAC

ASCE 7-16	II	30 ft	Ss = 1.25	19 sq.ft	LANDSCAPE	CROSS-SLOPE	NXT	NXT COMBO	Stronghold BUTYL Rafter #14S
Design Standard	Risk Category	Roof Height	Seismic	Module Area	Orientation	Rail Direction	Rail Type	Clamp	Attachment

SPAN TABLES

Maximum Allowable Rail Spans for Rooftop Solar Panels Parallel to the Roof Surface (inches)

Ground Snow Load (psf)	Wind Exposure Category	Roof Tilt Angle (deg)	Panel Exposure	90			95			100			105			110			115			120			130			140			150			160			170			180		
				Basic Wind Speed (mph) / Roof Wind Zone																																						
				1	2	3	1	2	3	1	2	3	1	2	3	1	2	3	1	2	3	1	2	3	1	2	3	1	2	3	1	2	3	1	2	3	1	2	3	1	2	3
0	B	0-7	Interior	102	102	102	102	102	102	102	102	101	102	102	96	102	102	92	102	102	88	102	97	84	102	90	78	97	84	73	91	79	69	86	75	65	81	71	62	77	67	60
			Exposed	102	102	92	102	100	87	102	95	83	102	91	79	101	87	76	97	84	73	93	81	70	86	75	65	80	70	62	76	66	59	71	63	55	68	61	52	65	58	60
		7-20	Interior	102	102	102	102	102	102	102	102	98	102	102	93	102	97	89	102	93	85	102	89	81	93	82	75	87	76	69	82	71	65	78	67	62	74	64	60	71	61	57
			Exposed	102	97	88	102	92	83	102	87	79	95	82	75	90	79	72	87	75	69	84	72	66	78	67	62	74	63	59	70	60	56	66	57	52	64	54	59	61	51	57
		20-27	Interior	103	103	103	103	103	103	103	103	103	103	103	103	103	103	100	103	101	95	103	97	91	103	89	83	100	83	77	93	77	72	88	72	67	84	68	64	80	65	61
			Exposed	103	103	100	103	100	94	103	95	88	103	90	84	103	86	80	99	82	76	95	79	73	88	73	67	83	68	63	78	64	60	74	61	56	71	59	52	68	56	47
		27-45	Interior	103	103	103	103	103	103	103	103	103	103	103	103	103	103	103	103	103	99	103	103	95	103	98	88	99	91	82	92	85	77	86	80	72	81	75	68	76	72	65
			Exposed	103	103	103	103	103	98	103	103	93	103	99	89	103	94	85	99	90	81	94	87	78	86	80	72	80	75	68	74	70	64	70	66	61	66	63	58	63	61	54
	C	0-7	Interior	102	102	95	102	102	90	102	99	85	102	94	81	102	90	78	100	86	75	96	83	72	89	77	67	83	72	63	78	68	60	74	65	57	70	62	54	66	60	51
			Exposed	102	90	78	99	85	74	94	82	71	90	78	68	86	75	65	82	72	63	79	69	61	74	65	58	69	62	53	65	59	49	62	55	57	60	52	54	57	59	50
		7-20	Interior	102	101	92	102	95	86	102	90	82	100	85	78	93	81	74	89	78	71	86	75	68	81	69	64	76	65	61	72	62	58	68	59	54	65	56	51	62	52	59
			Exposed	93	81	74	88	77	70	85	73	67	81	70	64	78	67	62	76	64	60	73	62	59	68	59	54	65	55	50	62	51	57	59	59	54	56	55	50	52	52	~~45~~
		20-27	Interior	103	103	103	103	103	97	103	98	92	103	93	87	103	89	83	103	85	79	98	81	76	91	75	70	85	70	65	81	66	61	76	63	58	73	60	54	70	57	51
			Exposed	103	89	83	101	84	78	96	80	74	92	76	71	88	73	67	85	70	65	82	67	62	77	63	59	72	60	54	68	56	48	65	53	58	62	60	53	60	57	47
		27-45	Interior	103	103	103	103	103	102	103	103	97	103	102	92	103	98	88	103	93	84	98	90	81	89	83	75	83	77	70	77	72	66	72	68	62	68	65	59	65	62	56
			Exposed	103	97	88	101	92	83	96	88	79	91	84	76	86	80	72	82	77	69	79	74	67	73	69	63	67	64	59	64	61	55	61	59	51	58	55	59	55	52	56
	D	0-7	Interior	102	101	87	102	96	83	102	91	79	101	87	75	96	83	72	92	80	69	89	77	67	82	72	63	77	67	60	72	64	56	68	61	52	65	58	60	62	55	57
			Exposed	96	83	72	91	79	69	87	76	66	83	72	63	80	70	61	76	67	59	74	65	57	69	61	53	65	58	59	62	54	56	59	50	52	55	58	~~48~~	52	55	~~43~~
		7-20	Interior	102	92	84	102	87	79	94	82	75	90	78	72	86	75	69	83	72	66	80	69	64	75	64	60	71	61	57	67	58	53	64	54	60	61	51	57	59	59	54
			Exposed	86	75	68	82	71	65	79	67	63	76	65	61	73	63	59	71	61	56	68	59	54	64	54	49	61	50	56	58	58	53	54	54	~~48~~	51	51	~~42~~	59	~~45~~	~~38~~
		20-27	Interior	103	101	94	103	95	89	103	90	84	103	85	80	98	82	76	94	78	72	90	75	69	85	69	64	80	65	61	75	62	57	71	59	53	68	56	47	65	53	58
			Exposed	98	81	76	93	77	72	89	73	68	85	70	65	82	67	63	79	65	60	76	63	58	72	59	53	68	55	46	64	52	56	61	59	52	59	56	43	56	53	~~38~~
		27-45	Interior	103	103	99	103	103	93	103	99	89	103	94	85	98	90	81	93	86	78	89	83	75	82	77	69	76	71	65	71	67	61	67	64	58	63	61	55	61	59	51
			Exposed	98	90	81	92	85	77	87	81	73	83	77	70	79	74	67	75	71	64	72	68	62	67	64	59	63	61	54	60	58	49	57	54	58	54	51	54	51	59	50
10	B	0-7	Interior	91	91	91	91	91	91	91	91	91	91	91	91	91	91	91	91	91	88	91	91	84	91	90	78	91	84	73	91	79	69	86	75	65	81	71	62	77	67	60
			Exposed	91	91	91	91	91	87	91	91	83	91	91	79	91	87	76	91	84	73	91	81	70	86	75	65	80	70	62	76	66	59	71	63	55	68	61	52	65	58	60
		7-20	Interior	91	91	91	91	91	91	91	91	91	91	91	91	91	91	89	91	91	85	91	89	81	91	82	75	87	76	69	82	71	65	78	67	62	74	64	60	71	61	57
			Exposed	91	91	88	91	91	83	91	87	79	91	82	75	90	79	72	87	75	69	84	72	66	78	67	62	74	63	59	70	60	56	66	57	52	64	54	59	61	51	57
		20-27	Interior	100	100	100	100	100	100	100	100	100	100	100	100	100	100	100	100	100	95	100	97	91	100	89	83	100	83	77	93	77	72	88	72	67	84	68	64	80	65	61
			Exposed	100	100	100	100	100	94	100	95	88	100	90	84	100	86	80	99	82	76	95	79	73	88	73	67	83	68	63	78	64	60	74	61	56	71	59	52	68	56	47
		27-45	Interior	102	102	102	102	102	102	102	102	102	102	102	102	102	102	102	102	102	99	102	102	95	102	98	88	99	91	82	92	85	77	86	80	72	81	75	68	76	72	65
			Exposed	102	102	102	102	102	98	102	102	93	102	99	89	102	94	85	99	90	81	94	87	78	86	80	72	80	75	68	74	70	64	70	66	61	66	63	58	63	61	54
	C	0-7	Interior	91	91	91	91	91	90	91	91	85	91	91	81	91	90	78	91	86	75	91	83	72	89	77	67	83	72	63	78	68	60	74	65	57	70	62	54	66	60	51
			Exposed	91	90	78	91	85	74	91	82	71	90	78	68	86	75	65	82	72	63	79	69	61	74	65	58	69	62	53	65	59	49	62	55	57	60	52	54	57	59	50
		7-20	Interior	91	91	91	91	91	86	91	90	82	91	85	78	91	81	74	89	78	71	86	75	68	81	69	64	76	65	61	72	62	58	68	59	54	65	56	51	62	52	59
			Exposed	91	81	74	88	77	70	85	73	67	81	70	64	78	67	62	76	64	60	73	62	59	68	59	54	65	55	50	62	51	57	59	59	54	56	55	50	52	52	~~45~~
		20-27	Interior	100	100	100	100	100	97	100	98	92	100	93	87	100	89	83	100	85	79	98	81	76	91	75	70	85	70	65	81	66	61	76	63	58	73	60	54	70	57	51
			Exposed	100	89	83	100	84	78	96	80	74	92	76	71	88	73	67	85	70	65	82	67	62	77	63	59	72	60	54	68	56	48	65	53	58	62	60	53	60	57	47
		27-45	Interior	102	102	102	102	102	102	102	102	97	102	102	92	102	98	88	102	93	84	98	90	81	89	83	75	83	77	70	77	72	66	72	68	62	68	65	59	65	62	56
			Exposed	102	97	88	101	92	83	96	88	79	91	84	76	86	80	72	82	77	69	79	74	67	73	69	63	67	64	59	64	61	55	61	59	51	58	55	59	55	52	56
	D	0-7	Interior	91	91	87	91	91	83	91	91	79	91	87	75	91	83	72	91	80	69	89	77	67	82	72	63	77	67	60	72	64	56	68	61	52	65	58	60	62	55	57
			Exposed	91	83	72	91	79	69	87	76	66	83	72	63	80	70	61	76	67	59	74	65	57	69	61	53	65	58	59	62	54	56	59	50	52	55	58	~~48~~	52	55	~~43~~
		7-20	Interior	91	91	84	91	87	79	91	82	75	90	78	72	86	75	69	83	72	66	80	69	64	75	64	60	71	61	57	67	58	53	64	54	60	61	51	57	59	59	54
			Exposed	86	75	68	82	71	65	79	67	63	76	65	61	73	63	59	71	61	56	68	59	54	64	54	49	61	50	56	58	58	53	54	54	~~48~~	51	51	~~42~~	59	~~45~~	~~38~~
		20-27	Interior	101	101	94	101	95	89	101	90	84	101	85	80	98	82	76	94	78	72	90	75	69	85	69	64	80	65	61	75	62	57	71	59	53	68	56	47	65	53	58
			Exposed	98	81	76	93	77	72	89	73	68	85	70	65	82	67	63	79	65	60	76	63	58	72	59	53	68	55	46	64	52	56	61	59	52	59	56	43	56	53	~~38~~
		27-45	Interior	103	103	99	103	103	93	103	99	89	103	94	85	98	90	81	93	86	78	89	83	75	82	77	69	76	71	65	71	67	61	67	64	58	63	61	55	61	59	51
			Exposed	98	90	81	92	85	77	87	81	73	83	77	70	79	74	67	75	71	64	72	68	62	67	64	59	63	61	54	60	58	49	57	54	58	54	51	54	51	59	50
20	B	0-7	Interior	78	78	78	78	78	78	78	78	78	78	78	78	78	78	78	78	78	78	78	78	78	78	78	78	78	78	73	78	78	69	78	75	65	78	71	62	77	67	60
			Exposed	78	78	78	78	78	78	78	78	78	78	78	78	78	78	76	78	78	73	78	78	70	78	75	65	78	70	62	76	66	59	71	63	55	68	61	52	65	58	60
		7-20	Interior	78	78	78	78	78	78	78	78	78	78	78	78	78	78	78	78	78	78	78	78	78	78	78	75	78	76	69	78	71	65	78	67	62	74	64	60	71	61	57
			Exposed	78	78	78	78	78	78	78	78	78	78	78	75	78	78	72	78	75	69	78	72	66	78	67	62	74	63	59	70	60	56	66	57	52	64	54	59	61	51	57
		20-27	Interior	92	92	92	92	92	92	92	92	92	92	92	92	92	92	92	92	92	92	92	92	91	92	89	83	92	83	77	92	77	72	88	72	67	84	68	64	80	65	61
			Exposed	92	92	92	92	92	92	92	92	88	92	90	84	92	86	80	92	82	76	92	79	73	88	73	67	83	68	63	78	64	60	74	61	56	71	59	52	68	56	47
		27-45	Interior	96	96	96	96	96	96	96	96	96	96	96	96	96	96	96	96	96	96	96	96	95	96	96	88	96	91	82	92	85	77	86	80	72	81	75	68	76	72	65
			Exposed	96	96	96	96	96	96	96	96	93	96	96	89	96	94	85	96	90	81	94	87	78	86	80	72	80	75	68	74	70	64	70	66	61	66	63	58	63	61	54
	C	0-7	Interior	78	78	78	78	78	78	78	78	78	78	78	78	78	78	78	78	78	75	78	78	72	78	77	67	78	72	63	78	68	60	74	65	57	70	62	54	66	60	51
			Exposed	78	78	78	78	78	74	78	78	71	78	78	68	78	75	65	78	72	63	78	69	61	74	65	58	69	62	53	65	59	49	62	55	57	60	52	54	57	59	50
		7-20	Interior	78	78	78	78	78	78	78	78	78	78	78	78	78	78	74	78	78	71	78	75	68	78	69	64	76	65	61	72	62	58	68	59	54	65	56	51	62	52	59
			Exposed	78	78	74	78	77	70	78	73	67	78	70	64	78	67	62	76	64	60	73	62	59	68	59	54	65	55	50	62	51	57	59	59	54	56	55	50	52	52	~~45~~
		20-27	Interior	92	92	92	92	92	92	92	92	92	92	92	87	92	89	83	92	85	79	92	81	76	91	75	70	85	70	65	81	66	61	76	63	58	73	60	54	70	57	51
			Exposed	92	89	83	92	84	78	92	80	74	92	76	71	88	73	67	85	70	65	82	67	62	77	63	59	72	60	54	68	56	48	65	53	58	62	60	53	60	57	47
		27-45	Interior	96	96	96	96	96	96	96	96	96	96	96	92	96	96	88	96	93	84	96	90	81	89	83	75	83	77	70	77	72	66	72	68	62	68	65	59	65	62	56
			Exposed	96	96	88	96	92	83	96	88	79	91	84	76	86	80	72	82	77	69	79	74	67	73	69	63	67	64	59	64	61	55	61	59	51	58	55	59	55	52	56
	D	0-7	Interior	78	78	78	78	78	78	78	78	78	78	78	75	78	78	72	78	78	69	78	77	67	78	72	63	77	67	60	72	64	56	68	61	52	65	58	60	62	55	57
			Exposed	78	78	72	78	78	69	78	76	66	78	72	63	78	70	61	76	67	59	74	65	57	69	61	53	65	58	59	62	54	56	59	50	52	55	58	~~48~~	52	55	~~43~~
		7-20	Interior	78	78	78	78	78	78	78	78	75	78	78	72	78	75	69	78	72	66	78	69	64	75	64	60	71	61	57	67	58	53	64	54	60	61	51	57	59	59	54
			Exposed	78	75	68	78	71	65	78	67	63	76	65	61	73	63	59	71	61	56	68	59	54	64	54	49	61	50	56	58	58	53	54	54	~~48~~	51	51	~~42~~	59	~~45~~	~~38~~
		20-27	Interior	94	94	94	94	94	89	94	90	84	94	85	80	94	82	76	94	78	72	90	75	69	85	69	64	80	65	61	75	62	57	71	59	53	68	56	47	65	53	58
			Exposed	94	81	76	93	77	72	89	73	68	85	70	65	82	67	63	79	65	60	76	63	58	72	59	53	68	55	46	64	52	56	61	59	52	59	56	43	56	53	~~38~~
		27-45	Interior	97	97	97	97	97	93	97	97	89	97	94	85	97	90	81	93	86	78	89	83	75	82	77	69	76	71	65	71	67	61	67	64	58	63	61	55	61	59	51
			Exposed	97	90	81	92	85	77	87	81	73	83	77	70	79	74	67	75	71	64	72	68	62	67	64	59	63	61	54	60	58	49	57	54	58	54	51	54	51	59	50

*	Cells with an astrisks indicates that the L-foot must be oriented in the Y- direction as indicated in the image.
10	Highlighted cell indicate 3-rail system span. Contact Unirac Engineering Services for support.
~~10~~	Highlighted cell with strikethrough indicate 3-rail system span and module clamp allowable capacity exceeds with 3-rails. 4-Rail system required. Contact Unirac Engineering Services for support.

UNIRAC

ASCE 7-16	II	30 ft	Ss = 1.25	19 sq.ft	LANDSCAPE	CROSS-SLOPE	NXT	NXT COMBO	Stronghold BUTYL Rafter #14S
Design Standard	Risk Category	Roof Height	Seismic	Module Area	Orientation	Rail Direction	Rail Type	Clamp	Attachment

SPAN TABLES

Maximum Allowable Rail Spans for Rooftop Solar Panels Parallel to the Roof Surface (inches)

Ground Snow Load (psf)	Wind Exposure Category	Roof Tilt Angle (deg)	Panel Exposure	Basic Wind Speed (mph)																																						
				90			95			100			105			110			115			120			130			140			150			160			170			180		
				Roof Wind Zone																																						
				1	2	3	1	2	3	1	2	3	1	2	3	1	2	3	1	2	3	1	2	3	1	2	3	1	2	3	1	2	3	1	2	3	1	2	3	1	2	3
30	B	0-7	Interior	77	77	77	77	77	77	77	77	77	77	77	77	77	77	77	77	77	77	77	77	77	77	77	77	77	77	73	77	77	69	77	75	65	77	71	62	77	67	60
			Exposed	77	77	77	77	77	77	77	77	77	77	77	77	77	77	76	77	77	73	77	77	70	77	75	65	77	70	62	76	66	59	71	63	55	68	61	52	65	58	60
		7-20	Interior	78	78	78	78	78	78	78	78	78	78	78	78	78	78	78	78	78	78	78	78	78	78	78	75	78	76	69	78	71	65	78	67	62	74	64	60	71	61	57
			Exposed	78	78	78	78	78	78	78	78	78	78	78	75	78	78	72	78	75	69	78	72	66	78	67	62	74	63	59	70	60	56	66	57	52	64	54	59	61	51	57
		20-27	Interior	86	86	86	86	86	86	86	86	86	86	86	86	86	86	86	86	86	86	86	86	86	86	86	83	86	83	77	86	77	72	86	72	67	84	68	64	80	65	61
			Exposed	86	86	86	86	86	86	86	86	86	86	86	84	86	86	80	86	82	76	86	79	73	86	73	67	83	68	63	78	64	60	74	61	56	71	59	52	68	56	47
		27-45	Interior	90	90	90	90	90	90	90	90	90	90	90	90	90	90	90	90	90	90	90	90	90	90	90	88	90	90	82	90	85	77	86	80	72	81	75	68	76	72	65
			Exposed	90	90	90	90	90	90	90	90	90	90	90	89	90	90	85	90	90	81	90	87	78	86	80	72	80	75	68	74	70	64	70	66	61	66	63	58	63	61	54
	C	0-7	Interior	77	77	77	77	77	77	77	77	77	77	77	77	77	77	77	77	77	75	77	77	72	77	77	67	77	72	63	77	68	60	74	65	57	70	62	54	66	60	51
			Exposed	77	77	77	77	77	74	77	77	71	77	77	68	77	75	65	77	72	63	77	69	61	74	65	58	69	62	53	65	59	49	62	55	57	60	52	54	57	59	50
		7-20	Interior	78	78	78	78	78	78	78	78	78	78	78	78	78	78	74	78	78	71	78	75	68	78	69	64	76	65	61	72	62	58	68	59	54	65	56	51	62	52	59
			Exposed	78	78	74	78	77	70	78	73	67	78	70	64	78	67	62	76	64	60	73	62	59	68	59	54	65	55	50	62	51	57	59	59	54	56	55	50	52	52	45
		20-27	Interior	86	86	86	86	86	86	86	86	86	86	86	86	86	86	83	86	85	79	86	81	76	86	75	70	85	70	65	81	66	61	76	63	58	73	60	54	70	57	51
			Exposed	86	86	83	86	84	78	86	80	74	86	76	71	86	73	67	85	70	65	82	67	62	77	63	59	72	60	54	68	56	48	65	53	58	62	60	53	60	57	47
		27-45	Interior	90	90	90	90	90	90	90	90	90	90	90	90	90	90	88	90	90	84	90	90	81	89	83	75	83	77	70	77	72	66	72	68	62	68	65	59	65	62	56
			Exposed	90	90	88	90	90	83	90	88	79	90	84	76	86	80	72	82	77	69	79	74	67	73	69	63	67	64	59	64	61	55	61	59	51	58	55	59	55	52	56
	D	0-7	Interior	78	78	78	78	78	78	78	78	78	78	78	75	78	78	72	78	78	69	78	77	67	78	72	63	77	67	60	72	64	56	68	61	52	65	58	60	62	55	57
			Exposed	78	78	72	78	78	69	78	76	66	78	72	63	78	70	61	76	67	59	74	65	57	69	61	53	65	58	59	62	54	56	59	50	52	55	58	48	52	55	43
		7-20	Interior	78	78	78	78	78	78	78	78	75	78	78	72	78	75	69	78	72	66	78	69	64	75	64	60	71	61	57	67	58	53	64	54	60	61	51	57	59	59	54
			Exposed	78	75	68	78	71	65	78	67	63	76	65	61	73	63	59	71	61	56	68	59	54	64	54	49	61	50	56	58	58	53	54	54	48	51	51	42	59	45	38
		20-27	Interior	88	88	88	88	88	88	88	88	84	88	85	80	88	82	76	88	78	72	88	75	69	85	69	64	80	65	61	75	62	57	71	59	53	68	56	47	65	53	58
			Exposed	88	81	76	88	77	72	88	73	68	85	70	65	82	67	63	79	65	60	76	63	58	72	59	53	68	55	46	64	52	56	61	59	52	59	56	43	56	53	38
		27-45	Interior	92	92	92	92	92	92	92	92	89	92	92	85	92	90	81	92	86	78	89	83	75	82	77	69	76	71	65	71	67	61	67	64	58	63	61	55	61	59	51
			Exposed	92	90	81	92	85	77	87	81	73	83	77	70	79	74	67	75	71	64	72	68	62	67	64	59	63	61	54	60	58	49	57	54	58	54	51	54	51	59	50
40	B	0-7	Interior	70	70	70	70	70	70	70	70	70	70	70	70	70	70	70	70	70	70	70	70	70	70	70	70	70	70	70	70	70	69	70	70	65	70	70	62	70	67	60
			Exposed	70	70	70	70	70	70	70	70	70	70	70	70	70	70	70	70	70	70	70	70	70	70	70	65	70	70	62	70	66	59	70	63	55	68	61	52	65	58	60
		7-20	Interior	72	72	72	72	72	72	72	72	72	72	72	72	72	72	72	72	72	72	72	72	72	72	72	72	72	72	69	72	71	65	72	67	62	72	64	60	71	61	57
			Exposed	72	72	72	72	72	72	72	72	72	72	72	72	72	72	72	72	72	69	72	72	66	72	67	62	72	63	59	70	60	56	66	57	52	64	54	59	61	51	57
		20-27	Interior	80	80	80	80	80	80	80	80	80	80	80	80	80	80	80	80	80	80	80	80	80	80	80	80	80	80	77	80	77	72	80	72	67	80	68	64	80	65	61
			Exposed	80	80	80	80	80	80	80	80	80	80	80	80	80	80	80	80	80	76	80	79	73	80	73	67	80	68	63	78	64	60	74	61	56	71	59	52	68	56	47
		27-45	Interior	86	86	86	86	86	86	86	86	86	86	86	86	86	86	86	86	86	86	86	86	86	86	86	86	86	86	82	85	85	77	82	80	72	80	75	68	76	72	65
			Exposed	86	86	86	86	86	86	86	86	86	86	86	86	86	86	85	86	86	81	86	86	78	86	80	72	80	75	68	74	70	64	70	66	61	66	63	58	63	61	54
	C	0-7	Interior	70	70	70	70	70	70	70	70	70	70	70	70	70	70	70	70	70	70	70	70	70	70	70	67	70	70	63	70	68	60	70	65	57	70	62	54	66	60	51
			Exposed	70	70	70	70	70	70	70	70	70	70	70	68	70	70	65	70	70	63	70	69	61	70	65	58	69	62	53	65	59	49	62	55	57	60	52	54	57	59	50
		7-20	Interior	72	72	72	72	72	72	72	72	72	72	72	72	72	72	72	72	72	71	72	72	68	72	69	64	72	65	61	72	62	58	68	59	54	65	56	51	62	52	59
			Exposed	72	72	72	72	72	70	72	72	67	72	70	64	72	67	62	72	64	60	72	62	59	68	59	54	65	55	50	62	51	57	59	59	54	56	55	50	52	52	45
		20-27	Interior	80	80	80	80	80	80	80	80	80	80	80	80	80	80	80	80	80	79	80	80	76	80	75	70	80	70	65	80	66	61	76	63	58	73	60	54	70	57	51
			Exposed	80	80	80	80	80	78	80	80	74	80	76	71	80	73	67	80	70	65	80	67	62	77	63	59	72	60	54	68	56	48	65	53	58	62	60	53	60	57	47
		27-45	Interior	86	86	86	86	86	86	86	86	86	86	86	86	86	86	86	86	86	84	86	86	81	84	83	75	81	77	70	77	72	66	72	68	62	68	65	59	65	62	56
			Exposed	86	86	86	86	86	83	86	86	79	86	84	76	86	80	72	82	77	69	79	74	67	73	69	63	67	64	59	64	61	55	61	59	51	58	55	59	55	52	56
	D	0-7	Interior	72	72	72	72	72	72	72	72	72	72	72	72	72	72	72	72	72	69	72	72	67	72	72	63	72	67	60	72	64	56	68	61	52	65	58	60	62	55	57
			Exposed	72	72	72	72	72	69	72	72	66	72	72	63	72	70	61	72	67	59	72	65	57	69	61	53	65	58	59	62	54	56	59	50	52	55	58	48	52	55	43
		7-20	Interior	75	75	75	75	75	75	75	75	75	75	75	72	75	75	69	75	72	66	75	69	64	75	64	60	71	61	57	67	58	53	64	54	60	61	51	57	59	59	54
			Exposed	75	75	68	75	71	65	75	67	63	75	65	61	73	63	59	71	61	56	68	59	54	64	54	49	61	50	56	58	58	53	54	54	48	51	51	42	59	45	38
		20-27	Interior	82	82	82	82	82	82	82	82	82	82	82	80	82	82	76	82	78	72	82	75	69	82	69	64	80	65	61	75	62	57	71	59	53	68	56	47	65	53	58
			Exposed	82	81	76	82	77	72	82	73	68	82	70	65	82	67	63	79	65	60	76	63	58	72	59	53	68	55	46	64	52	56	61	59	52	59	56	43	56	53	38
		27-45	Interior	88	88	88	88	88	88	88	88	88	88	88	85	88	88	81	88	86	78	86	83	75	82	77	69	76	71	65	71	67	61	67	64	58	63	61	55	61	59	51
			Exposed	88	88	81	88	85	77	87	81	73	83	77	70	79	74	67	75	71	64	72	68	62	67	64	59	63	61	54	60	58	49	57	54	58	54	51	54	51	59	50
50	B	0-7	Interior	63	63	63	63	63	63	63	63	63	63	63	63	63	63	63	63	63	63	63	63	63	63	63	63	63	63	63	63	63	63	63	63	63	63	63	62	63	63	60
			Exposed	63	63	63	63	63	63	63	63	63	63	63	63	63	63	63	63	63	63	63	63	63	63	63	63	63	63	62	63	63	59	63	63	55	63	61	52	63	58	60
		7-20	Interior	66	66	66	66	66	66	66	66	66	66	66	66	66	66	66	66	66	66	66	66	66	66	66	66	66	66	66	66	66	65	66	66	62	66	64	60	66	61	57
			Exposed	66	66	66	66	66	66	66	66	66	66	66	66	66	66	66	66	66	66	66	66	66	66	66	62	66	63	59	66	60	56	66	57	52	64	54	59	61	51	57
		20-27	Interior	74	74	74	74	74	74	74	74	74	74	74	74	74	74	74	74	74	74	74	74	74	74	74	74	74	74	74	74	74	72	74	72	67	74	68	64	74	65	61
			Exposed	74	74	74	74	74	74	74	74	74	74	74	74	74	74	74	74	74	74	74	74	73	74	73	67	74	68	63	74	64	60	74	61	56	71	59	52	68	56	47
		27-45	Interior	80	80	80	80	80	80	80	80	80	80	80	80	80	80	80	80	80	80	80	80	80	80	80	80	80	80	80	79	79	77	77	77	72	75	75	68	73	72	65
			Exposed	80	80	80	80	80	80	80	80	80	80	80	80	80	80	80	80	80	80	80	80	78	80	80	72	80	75	68	74	70	64	70	66	61	66	63	58	63	61	54
	C	0-7	Interior	63	63	63	63	63	63	63	63	63	63	63	63	63	63	63	63	63	63	63	63	63	63	63	63	63	63	63	63	63	60	63	63	57	63	62	54	63	60	51
			Exposed	63	63	63	63	63	63	63	63	63	63	63	63	63	63	63	63	63	63	63	63	61	63	63	58	63	62	53	63	59	49	62	55	57	60	52	54	57	59	50
		7-20	Interior	66	66	66	66	66	66	66	66	66	66	66	66	66	66	66	66	66	66	66	66	66	66	66	64	66	65	61	66	62	58	65	59	54	64	56	51	62	52	59
			Exposed	66	66	66	66	66	66	66	66	66	66	66	64	66	66	62	66	64	60	66	62	59	66	59	54	65	55	50	62	51	57	59	59	54	56	55	50	52	52	45
		20-27	Interior	74	74	74	74	74	74	74	74	74	74	74	74	74	74	74	74	74	74	74	74	74	74	74	70	74	70	65	74	66	61	73	63	58	72	60	54	70	57	51
			Exposed	74	74	74	74	74	74	74	74	74	74	74	71	74	73	67	74	70	65	74	67	62	74	63	59	72	60	54	68	56	48	65	53	58	62	60	53	60	57	47
		27-45	Interior	80	80	80	80	80	80	80	80	80	80	80	80	80	80	80	80	80	80	80	80	80	78	78	75	76	76	70	73	72	66	71	68	62	68	65	59	65	62	56
			Exposed	80	80	80	80	80	80	80	80	79	80	80	76	80	80	72	80	77	69	79	74	67	73	69	63	67	64	59	64	61	55	61	59	51	58	55	59	55	52	56
	D	0-7	Interior	66	66	66	66	66	66	66	66	66	66	66	66	66	66	66	66	66	66	66	66	66	66	66	60	66	66	60	66	64	56	66	61	52	65	58	60	62	55	57
			Exposed	66	66	66	66	66	66	66	66	66	66	66	63	66	66	61	66	66	59	66	65	57	66	61	53	65	58	59	62	54	56	59	50	52	55	58	48	52	55	43
		7-20	Interior	69	69	69	69	69	69	69	69	69	69	69	69	69	69	69	69	69	66	69	69	64	69	64	60	69	61	57	67	58	53	64	54	60	61	51	57	59	59	54
			Exposed	69	69	68	69	69	65	69	67	63	69	65	61	69	63	59	69	61	56	68	59	54	64	54	49	61	50	56	58	58	53	54	54	48	51	51	42	59	45	38
		20-27	Interior	77	77	77	77	77	77	77	77	77	77	77	77	77	77	76	77	77	72	77	75	69	77	69	64	77	65	61	75	62	57	71	59	53	68	56	47	65	53	58
			Exposed	77	77	76	77	77	72	77	73	68	77	70	65	77	67	63	77	65	60	76	63	58	72	59	53	68	55	46	64	52	56	61	59	52	59	56	43	56	53	38
		27-45	Interior	83	83	83	83	83	83	83	83	83	83	83	83	83	83	81	82	82	78	81	81	75	78	77	69	75	71	65	71	67	61	67	64	58	63	61	55	61	59	51
			Exposed	83	83	81	83	83	77	83	81	73	83	77	70	79	74	67	75	71	64	72	68	62	67	64	59	63	61	54	60	58	49	57	54	58	54	51	54	51	59	50

* Cells with an astrisks indicates that the L-foot must be oriented in the Y- direction as indicated in the image.

10 Highlighted cell indicate 3-rail system span. Contact Unirac Engineering Services for support.

~~10~~ Highlighted cell with strikethrough indicate 3-rail system span and module clamp allowable capacity exceeds with 3-rails. 4-Rail system required. Contact Unirac Engineering Services for support.

UNIRAC

ASCE 7-16	II	30 ft	Ss = 1.25	19 sq.ft	LANDSCAPE	CROSS-SLOPE	NXT	NXT COMBO	Stronghold BUTYL Rafter #14S
Design Standard	Risk Category	Roof Height	Seismic	Module Area	Orientation	Rail Direction	Rail Type	Clamp	Attachment

SPAN TABLES

Maximum Allowable Rail Spans for Rooftop Solar Panels Parallel to the Roof Surface (inches)

Ground Snow Load (psf)	Wind Exposure Category	Roof Tilt Angle (deg)	Panel Exposure	Basic Wind Speed (mph)																																								
				90			95			100			105			110			115			120			130			140			150			160			170			180		
				Roof Wind Zone																																								
				1	2	3	1	2	3	1	2	3	1	2	3	1	2	3	1	2	3	1	2	3	1	2	3	1	2	3	1	2	3	1	2	3	1	2	3	1	2	3
60	B	0-7	Interior	58	58	58	58	58	58	58	58	58	58	58	58	58	58	58	58	58	58	58	58	58	58	58	58	58	58	58	58	58	58	58	58	58	58	58	58	58	58	58	58	58
			Exposed	58	58	58	58	58	58	58	58	58	58	58	58	58	58	58	58	58	58	58	58	58	58	58	58	58	58	58	58	58	58	58	58	55	58	58	52	58	58	60
		7-20	Interior	60	60	60	60	60	60	60	60	60	60	60	60	60	60	60	60	60	60	60	60	60	60	60	60	60	60	60	60	60	60	60	60	60	60	60	60	60	60	57
			Exposed	60	60	60	60	60	60	60	60	60	60	60	60	60	60	60	60	60	60	60	60	60	60	60	60	60	60	59	60	60	56	60	57	52	60	54	59	60	51	57
		20-27	Interior	70	70	70	70	70	70	70	70	70	70	70	70	70	70	70	70	70	70	70	70	70	70	70	70	70	70	70	70	70	70	70	70	67	70	68	64	70	65	61
			Exposed	70	70	70	70	70	70	70	70	70	70	70	70	70	70	70	70	70	70	70	70	70	70	70	67	70	68	63	70	64	60	70	61	56	70	59	52	68	56	47
		27-45	Interior	76	76	76	76	76	76	76	76	76	76	76	76	76	76	76	76	76	76	76	76	76	76	76	76	76	76	76	74	74	74	73	73	72	71	71	68	69	69	65
			Exposed	76	76	76	76	76	76	76	76	76	76	76	76	76	76	76	76	76	76	76	76	76	76	76	72	76	75	68	74	70	64	70	66	61	66	63	58	63	61	54
	C	0-7	Interior	58	58	58	58	58	58	58	58	58	58	58	58	58	58	58	58	58	58	58	58	58	58	58	58	58	58	58	58	58	58	58	58	57	58	58	54	58	58	51
			Exposed	58	58	58	58	58	58	58	58	58	58	58	58	58	58	58	58	58	58	58	58	58	58	58	58	58	58	53	58	58	49	58	55	57	58	52	54	57	59	50
		7-20	Interior	60	60	60	60	60	60	60	60	60	60	60	60	60	60	60	60	60	60	60	60	60	60	60	60	60	60	60	60	60	58	60	59	54	60	56	51	59	52	59
			Exposed	60	60	60	60	60	60	60	60	60	60	60	60	60	60	60	60	60	60	60	60	59	60	59	54	60	55	50	60	51	57	59	59	54	56	55	50	52	52	45
		20-27	Interior	70	70	70	70	70	70	70	70	70	70	70	70	70	70	70	70	70	70	70	70	70	70	70	70	70	70	65	70	66	61	69	63	58	67	60	54	66	57	51
			Exposed	70	70	70	70	70	70	70	70	70	70	70	70	70	67	70	70	65	70	67	62	70	63	59	70	60	54	68	56	48	65	53	58	62	60	53	60	57	47
		27-45	Interior	76	76	76	76	76	76	76	76	76	76	76	76	76	76	76	76	76	76	76	76	76	74	74	74	72	72	70	69	69	66	67	67	62	65	65	59	63	62	56
			Exposed	76	76	76	76	76	76	76	76	76	76	76	76	76	72	76	76	69	76	74	67	73	69	63	67	64	59	64	61	55	61	59	51	58	55	59	55	52	56	
	D	0-7	Interior	61	61	61	61	61	61	61	61	61	61	61	61	61	61	61	61	61	61	61	61	61	61	61	61	61	61	60	61	61	56	61	61	52	61	58	60	61	55	57
			Exposed	61	61	61	61	61	61	61	61	61	61	61	61	61	61	61	61	59	61	61	57	61	61	53	61	58	59	61	54	56	59	50	52	55	58	48	52	55	43
		7-20	Interior	64	64	64	64	64	64	64	64	64	64	64	64	64	64	64	64	64	64	64	64	64	64	64	60	64	61	57	63	58	53	62	54	60	61	51	57	59	59	54
			Exposed	64	64	64	64	64	64	64	64	63	64	64	61	64	63	59	64	61	56	64	59	54	64	54	49	61	50	56	58	58	53	54	54	48	51	51	42	59	45	38
		20-27	Interior	72	72	72	72	72	72	72	72	72	72	72	72	72	72	72	72	72	72	72	72	69	72	69	64	72	65	61	71	62	57	69	59	53	68	56	47	65	53	58
			Exposed	72	72	72	72	72	72	72	72	68	72	70	65	72	67	63	72	65	60	72	63	58	72	59	53	68	55	46	64	52	56	61	59	52	59	56	43	56	53	38
		27-45	Interior	79	79	79	79	79	79	79	79	79	79	79	79	79	79	79	77	77	77	76	76	75	74	74	69	71	71	65	69	67	61	66	64	58	63	61	55	61	59	51
			Exposed	79	79	79	79	79	77	79	79	73	79	77	70	79	74	67	75	71	64	72	68	62	67	64	59	63	61	54	60	58	49	57	54	58	54	51	54	51	59	50
70	B	0-7	Interior	54	54	54	54	54	54	54	54	54	54	54	54	54	54	54	54	54	54	54	54	54	54	54	54	54	54	54	54	54	54	54	54	54	54	54	54	54	54	54
			Exposed	54	54	54	54	54	54	54	54	54	54	54	54	54	54	54	54	54	54	54	54	54	54	54	54	54	54	54	54	54	54	54	54	54	54	54	52	54	54	60
		7-20	Interior	56	56	56	56	56	56	56	56	56	56	56	56	56	56	56	56	56	56	56	56	56	56	56	56	56	56	56	56	56	56	56	56	56	56	56	56	56	56	56
			Exposed	56	56	56	56	56	56	56	56	56	56	56	56	56	56	56	56	56	56	56	56	56	56	56	56	56	56	56	56	56	56	56	56	52	56	54	59	56	51	57
		20-27	Interior	65	65	65	65	65	65	65	65	65	65	65	65	65	65	65	65	65	65	65	65	65	65	65	65	65	65	65	65	65	65	65	65	65	65	65	64	65	65	61
			Exposed	65	65	65	65	65	65	65	65	65	65	65	65	65	65	65	65	65	65	65	65	65	65	65	65	65	65	63	65	64	60	65	61	56	65	59	52	65	56	47
		27-45	Interior	72	72	72	72	72	72	72	72	72	72	72	72	72	72	72	72	72	72	72	72	72	72	72	72	72	72	72	70	70	70	69	69	69	67	67	67	66	66	65
			Exposed	72	72	72	72	72	72	72	72	72	72	72	72	72	72	72	72	72	72	72	72	72	72	72	72	72	72	68	70	70	64	69	66	61	66	63	58	63	61	54
	C	0-7	Interior	54	54	54	54	54	54	54	54	54	54	54	54	54	54	54	54	54	54	54	54	54	54	54	54	54	54	54	54	54	54	54	54	54	54	54	54	54	54	51
			Exposed	54	54	54	54	54	54	54	54	54	54	54	54	54	54	54	54	54	54	54	54	54	54	54	54	54	54	53	54	54	49	54	54	57	54	52	54	54	59	50
		7-20	Interior	56	56	56	56	56	56	56	56	56	56	56	56	56	56	56	56	56	56	56	56	56	56	56	56	56	56	56	56	56	56	56	56	54	56	56	51	56	52	59
			Exposed	56	56	56	56	56	56	56	56	56	56	56	56	56	56	56	56	56	56	56	56	56	56	56	54	56	55	50	56	51	57	56	59	54	56	55	50	52	52	45
		20-27	Interior	65	65	65	65	65	65	65	65	65	65	65	65	65	65	65	65	65	65	65	65	65	65	65	65	65	65	65	65	65	61	65	63	58	64	60	54	63	57	51
			Exposed	65	65	65	65	65	65	65	65	65	65	65	65	65	65	65	65	65	65	65	62	65	63	59	65	60	54	65	56	48	65	53	58	62	60	53	60	57	47
		27-45	Interior	72	72	72	72	72	72	72	72	72	72	72	72	72	72	72	72	72	72	72	72	72	70	70	70	68	68	68	66	66	66	64	64	62	63	63	59	61	61	56
			Exposed	72	72	72	72	72	72	72	72	72	72	72	72	72	72	72	72	72	69	72	72	67	70	69	63	67	64	59	64	61	55	61	59	51	58	55	59	55	52	56
	D	0-7	Interior	57	57	57	57	57	57	57	57	57	57	57	57	57	57	57	57	57	57	57	57	57	57	57	57	57	57	57	57	57	56	57	57	52	57	57	60	57	55	57
			Exposed	57	57	57	57	57	57	57	57	57	57	57	57	57	57	57	57	57	57	57	57	57	57	57	53	57	57	59	57	54	56	57	50	52	55	58	48	52	55	43
		7-20	Interior	59	59	59	59	59	59	59	59	59	59	59	59	59	59	59	59	59	59	59	59	59	59	59	59	59	59	57	59	58	53	59	54	60	58	51	57	57	59	54
			Exposed	59	59	59	59	59	59	59	59	59	59	59	59	59	59	59	59	56	59	59	54	59	54	49	59	50	56	58	58	58	53	54	54	48	51	51	42	59	45	38
		20-27	Interior	69	69	69	69	69	69	69	69	69	69	69	69	69	69	69	69	69	69	69	69	69	69	69	64	68	65	61	67	62	57	66	59	53	64	56	47	63	53	58
			Exposed	69	69	69	69	69	69	69	69	68	69	69	65	69	67	63	69	65	60	69	63	58	69	59	53	68	55	46	64	52	56	61	59	52	59	56	43	56	53	38
		27-45	Interior	75	75	75	75	75	75	75	75	75	75	75	75	74	74	74	73	73	73	72	72	72	70	70	69	68	68	65	66	66	61	64	64	58	62	61	55	60	59	51
			Exposed	75	75	75	75	75	75	75	75	73	75	75	70	74	74	67	73	71	64	72	68	62	67	64	59	63	61	54	60	58	49	57	54	58	54	51	54	51	59	50
80	B	0-7	Interior	51	51	51	51	51	51	51	51	51	51	51	51	51	51	51	51	51	51	51	51	51	51	51	51	51	51	51	51	51	51	51	51	51	51	51	51	51	51	51
			Exposed	51	51	51	51	51	51	51	51	51	51	51	51	51	51	51	51	51	51	51	51	51	51	51	51	51	51	51	51	51	51	51	51	51	51	51	51	51	51	60
		7-20	Interior	53	53	53	53	53	53	53	53	53	53	53	53	53	53	53	53	53	53	53	53	53	53	53	53	53	53	53	53	53	53	53	53	53	53	53	53	53	53	53
			Exposed	53	53	53	53	53	53	53	53	53	53	53	53	53	53	53	53	53	53	53	53	53	53	53	53	53	53	53	53	53	53	53	53	52	53	53	59	53	51	57
		20-27	Interior	61	61	61	61	61	61	61	61	61	61	61	61	61	61	61	61	61	61	61	61	61	61	61	61	61	61	61	61	61	61	61	61	61	61	61	61	61	61	61
			Exposed	61	61	61	61	61	61	61	61	61	61	61	61	61	61	61	61	61	61	61	61	61	61	61	61	61	61	61	61	61	60	61	61	56	61	59	52	61	56	47
		27-45	Interior	86*	86*	86*	86*	86*	86*	86*	86*	86*	86*	86*	86*	86*	86*	86*	86*	86*	86*	86*	86*	86*	86*	86*	86*	86*	86*	68	67	67	67	66	66	66	64	64	64	63	63	63
			Exposed	86*	86*	86*	86*	86*	86*	86*	86*	86*	86*	86*	86*	86*	86*	69	86*	86*	69	86*	86*	69	86*	69	69	68	68	68	67	67	64	66	66	61	64	63	58	63	61	54
	C	0-7	Interior	51	51	51	51	51	51	51	51	51	51	51	51	51	51	51	51	51	51	51	51	51	51	51	51	51	51	51	51	51	51	51	51	51	51	51	51	51	51	51
			Exposed	51	51	51	51	51	51	51	51	51	51	51	51	51	51	51	51	51	51	51	51	51	51	51	51	51	51	51	51	51	49	51	51	57	51	51	54	51	59	50
		7-20	Interior	53	53	53	53	53	53	53	53	53	53	53	53	53	53	53	53	53	53	53	53	53	53	53	53	53	53	53	53	53	53	53	53	53	53	53	51	53	52	59
			Exposed	53	53	53	53	53	53	53	53	53	53	53	53	53	53	53	53	53	53	53	53	53	53	53	53	53	53	50	53	51	57	53	59	54	53	55	50	52	52	45
		20-27	Interior	61	61	61	61	61	61	61	61	61	61	61	61	61	61	61	61	61	61	61	61	61	61	61	61	61	61	61	61	61	61	61	61	58	61	60	54	60	57	51
			Exposed	61	61	61	61	61	61	61	61	61	61	61	61	61	61	61	61	61	61	61	61	61	61	61	59	61	60	54	61	56	48	61	53	58	61	60	53	60	57	47
		27-45	Interior	86*	86*	86*	86*	86*	86*	86*	86*	86*	86*	86*	86*	86*	86*	86*	86*	86*	69	86*	86*	68	67	67	67	65	65	65	63	63	63	62	62	62	61	61	59	59	59	56
			Exposed	86*	86*	86*	86*	86*	69	86*	86*	69	86*	69	69	86*	69	69	69	69	69	68	68	67	67	67	63	65	64	59	63	61	55	61	59	51	58	55	59	55	52	56
	D	0-7	Interior	53	53	53	53	53	53	53	53	53	53	53	53	53	53	53	53	53	53	53	53	53	53	53	53	53	53	53	53	53	53	53	53	52	53	53	60	53	53	57
			Exposed	53	53	53	53	53	53	53	53	53	53	53	53	53	53	53	53	53	53	53	53	53	53	53	59	53	53	56	53	53	50	52	53	58	48	52	55	43		
		7-20	Interior	55	55	55	55	55	55	55	55	55	55	55	55	55	55	55	55	55	55	55	55	55	55	55	55	55	55	53	55	54	60	55	51	57	54	59	54			
			Exposed	55	55	55	55	55	55	55	55	55	55	55	55	55	55	55	55	55	55	55	54	55	54	49	55	50	56	55	58	53	54	54	48	51	51	42	59	45	38	
		20-27	Interior	64	64	64	64	64	64	64	64	64	64	64	64	64	64	64	64	64	64	64	64	64	64	64	64	64	64	61	64	62	57	63	59	53	61	56	47	60	53	58
			Exposed	64	64	64	64	64	64	64	64	64	64	64	64	64	64	63	64	64	60	64	63	58	64	59	53	64	55	46	64	52	56	61	59	52	59	56	43	56	53	38
		27-45	Interior	72	72	72	72	72	72	72	72	72	72	72	71	71	71	70	70	70	69	69	69	67	67	67	65	65	65	63	63	63	61	62	62	58	60	60	55	58	58	51
			Exposed	72	72	72	72	72	72	72	72	72	72	72	70	71	71	67	70	70	64	69	68	62	67	64	59	63	61	54	60	58	49	57	54	58	54	51	54	51	59	50

* Cells with an astrisks indicates that the L-foot must be oriented in the Y- direction as indicated in the image.

10 Highlighted cell indicate 3-rail system span. Contact Unirac Engineering Services for support.

~~10~~ Highlighted cell with strikethrough indicate 3-rail system span and module clamp allowable capacity exceeds with 3-rails. 4-Rail system required. Contact Unirac Engineering Services for support.

UNIRAC

ASCE 7-16	II	30 ft	Ss = 1.25	19 sq.ft	LANDSCAPE	CROSS-SLOPE	NXT	NXT COMBO	Stronghold BUTYL Rafter #14S
Design Standard	Risk Category	Roof Height	Seismic	Module Area	Orientation	Rail Direction	Rail Type	Clamp	Attachment

SPAN TABLES

Maximum Allowable Rail Spans for Rooftop Solar Panels Parallel to the Roof Surface (inches)

Ground Snow Load (psf)	Wind Exposure Category	Roof Tilt Angle (deg)	Panel Exposure	Basic Wind Speed (mph)																																						
				90			95			100			105			110			115			120			130			140			150			160			170			180		
				Roof Wind Zone																																						
				1	2	3	1	2	3	1	2	3	1	2	3	1	2	3	1	2	3	1	2	3	1	2	3	1	2	3	1	2	3	1	2	3	1	2	3	1	2	3
90	B	0-7	Interior	48	48	48	48	48	48	48	48	48	48	48	48	48	48	48	48	48	48	48	48	48	48	48	48	48	48	48	48	48	48	48	48	48	48	48	48	48	48	48
			Exposed	48	48	48	48	48	48	48	48	48	48	48	48	48	48	48	48	48	48	48	48	48	48	48	48	48	48	48	48	48	48	48	48	48	48	48	48	48	48	59
		7-20	Interior	50	50	50	50	50	50	50	50	50	50	50	50	50	50	50	50	50	50	50	50	50	50	50	50	50	50	50	50	50	50	50	50	50	50	50	50	50	50	50
			Exposed	50	50	50	50	50	50	50	50	50	50	50	50	50	50	50	50	50	50	50	50	50	50	50	50	50	50	50	50	50	50	50	50	50	50	50	59	50	50	57
		20-27	Interior	58	58	58	58	58	58	58	58	58	58	58	58	58	58	58	58	58	58	58	58	58	58	58	58	58	58	58	58	58	58	58	58	58	58	58	58	58	58	58
			Exposed	58	58	58	58	58	58	58	58	58	58	58	58	58	58	58	58	58	58	58	58	58	58	58	58	58	58	58	58	58	58	58	58	56	58	58	52	58	56	47
		27-45	Interior	73*	73*	73*	73*	73*	73*	73*	73*	73*	73*	73*	73*	73*	73*	73*	73*	73*	73*	73*	73*	73*	73*	73*	73*	72*	72*	72*	71*	71*	71*	73*	73*	72*	74*	74*	62	61	61	61
			Exposed	73*	73*	73*	73*	73*	73*	73*	73*	73*	73*	73*	73*	73*	73*	73*	73*	73*	73*	73*	73*	73*	73*	73*	73*	72*	72*	65	71*	64	64	63	63	61	62	62	58	61	61	54
	C	0-7	Interior	48	48	48	48	48	48	48	48	48	48	48	48	48	48	48	48	48	48	48	48	48	48	48	48	48	48	48	48	48	48	48	48	48	48	48	48	48	48	48
			Exposed	48	48	48	48	48	48	48	48	48	48	48	48	48	48	48	48	48	48	48	48	48	48	48	48	48	48	48	48	48	48	48	48	57	48	48	54	48	59	50
		7-20	Interior	50	50	50	50	50	50	50	50	50	50	50	50	50	50	50	50	50	50	50	50	50	50	50	50	50	50	50	50	50	50	50	50	50	50	50	50	50	50	59
			Exposed	50	50	50	50	50	50	50	50	50	50	50	50	50	50	50	50	50	50	50	50	50	50	50	50	50	50	50	50	50	57	50	59	54	50	55	50	50	52	45
		20-27	Interior	58	58	58	58	58	58	58	58	58	58	58	58	58	58	58	58	58	58	58	58	58	58	58	58	58	58	58	58	58	58	58	58	58	58	58	54	57	57	51
			Exposed	58	58	58	58	58	58	58	58	58	58	58	58	58	58	58	58	58	58	58	58	58	58	58	58	58	58	54	58	56	48	58	53	58	58	60	53	57	57	47
		27-45	Interior	73*	73*	73*	73*	73*	73*	73*	73*	73*	73*	73*	73*	73*	73*	73*	73*	73*	73*	72*	72*	72*	74*	74*	74*	72*	72*	63	61	61	61	60	60	60	59	59	59	57	57	56
			Exposed	73*	73*	73*	73*	73*	73*	73*	73*	73*	73*	73*	73*	73*	72*	73*	73*	65	72*	72*	65	73*	64	63	63	63	59	61	61	55	60	59	51	58	55	59	55	52	56	
	D	0-7	Interior	50	50	50	50	50	50	50	50	50	50	50	50	50	50	50	50	50	50	50	50	50	50	50	50	50	50	50	50	50	50	50	50	50	50	50	60	50	50	57
			Exposed	50	50	50	50	50	50	50	50	50	50	50	50	50	50	50	50	50	50	50	50	50	50	50	50	50	50	59	50	50	56	50	50	52	50	58	48	50	55	43
		7-20	Interior	52	52	52	52	52	52	52	52	52	52	52	52	52	52	52	52	52	52	52	52	52	52	52	52	52	52	52	52	52	52	52	52	60	52	51	57	52	59	54
			Exposed	52	52	52	52	52	52	52	52	52	52	52	52	52	52	52	52	52	52	52	52	52	52	52	49	52	50	56	52	58	53	52	54	48	51	51	42	59	45	38
		20-27	Interior	61	61	61	61	61	61	61	61	61	61	61	61	61	61	61	61	61	61	61	61	61	61	61	61	61	61	61	61	61	57	60	59	53	59	56	47	58	53	58
			Exposed	61	61	61	61	61	61	61	61	61	61	61	61	61	61	61	61	61	60	61	61	58	61	59	53	61	55	46	61	52	56	60	59	52	59	56	43	56	53	38
		27-45	Interior	79*	79*	79*	79*	79*	79*	79*	79*	79*	79*	79*	79*	79*	79*	79*	85*	85*	67	66	66	66	64	64	64	63	63	63	61	61	61	60	60	58	58	58	55	57	57	51
			Exposed	79*	79*	79*	79*	79*	68	79*	79*	68	79*	68	68	79*	68	67	67	67	64	66	66	62	64	64	59	63	61	54	60	58	49	57	54	58	54	51	54	51	59	50
100	B	0-7	Interior	45	45	45	45	45	45	45	45	45	45	45	45	45	45	45	45	45	45	45	45	45	45	45	45	45	45	45	45	45	45	45	45	45	45	45	45	45	45	45
			Exposed	45	45	45	45	45	45	45	45	45	45	45	45	45	45	45	45	45	45	45	45	45	45	45	45	45	45	45	45	45	45	45	45	45	45	45	45	45	45	56
		7-20	Interior	47	47	47	47	47	47	47	47	47	47	47	47	47	47	47	47	47	47	47	47	47	47	47	47	47	47	47	47	47	47	47	47	47	47	47	47	47	47	47
			Exposed	47	47	47	47	47	47	47	47	47	47	47	47	47	47	47	47	47	47	47	47	47	47	47	47	47	47	47	47	47	47	47	47	47	47	47	58	47	47	57
		20-27	Interior	55	55	55	55	55	55	55	55	55	55	55	55	55	55	55	55	55	55	55	55	55	55	55	55	55	55	55	55	55	55	55	55	55	55	55	55	55	55	55
			Exposed	55	55	55	55	55	55	55	55	55	55	55	55	55	55	55	55	55	55	55	55	55	55	55	55	55	55	55	55	55	55	55	55	55	55	55	52	55	55	47
		27-45	Interior	66*	66*	66*	66*	66*	66*	66*	66*	66*	66*	66*	66*	66*	66*	66*	66*	66*	66*	66*	66*	66*	66*	66*	66*	66*	66*	66*	65*	65*	65*	64*	64*	64*	65*	65*	65*	64*	64*	64*
			Exposed	66*	66*	66*	66*	66*	66*	66*	66*	66*	66*	66*	66*	66*	66*	66*	66*	66*	66*	66*	66*	66*	66*	66*	66*	66*	66*	66*	65*	65*	64*	64*	64*	61	65*	60	58	59	59	54
	C	0-7	Interior	45	45	45	45	45	45	45	45	45	45	45	45	45	45	45	45	45	45	45	45	45	45	45	45	45	45	45	45	45	45	45	45	45	45	45	45	45	45	45
			Exposed	45	45	45	45	45	45	45	45	45	45	45	45	45	45	45	45	45	45	45	45	45	45	45	45	45	45	45	45	45	45	45	45	56	45	45	54	45	56	50
		7-20	Interior	47	47	47	47	47	47	47	47	47	47	47	47	47	47	47	47	47	47	47	47	47	47	47	47	47	47	47	47	47	47	47	47	47	47	47	47	47	47	58
			Exposed	47	47	47	47	47	47	47	47	47	47	47	47	47	47	47	47	47	47	47	47	47	47	47	47	47	47	47	47	47	57	47	58	54	47	55	50	47	52	45
		20-27	Interior	55	55	55	55	55	55	55	55	55	55	55	55	55	55	55	55	55	55	55	55	55	55	55	55	55	55	55	55	55	55	55	55	55	55	55	54	55	55	51
			Exposed	55	55	55	55	55	55	55	55	55	55	55	55	55	55	55	55	55	55	55	55	55	55	55	55	55	55	54	55	55	48	55	53	58	55	60	53	55	57	47
		27-45	Interior	66*	66*	66*	66*	66*	66*	66*	66*	66*	66*	66*	66*	66*	66*	66*	66*	66*	66*	66*	66*	66*	64*	64*	64*	66*	66*	66*	64*	64*	64*	68*	68*	58	57	57	57	56	56	56
			Exposed	66*	66*	66*	66*	66*	66*	66*	66*	66*	66*	66*	66*	66*	66*	66*	66*	66*	66*	66*	66*	66*	64*	64*	62	66*	65*	59	64*	59	55	58	58	51	57	55	59	55	52	56
	D	0-7	Interior	48	48	48	48	48	48	48	48	48	48	48	48	48	48	48	48	48	48	48	48	48	48	48	48	48	48	48	48	48	48	48	48	48	48	48	59	48	48	57
			Exposed	48	48	48	48	48	48	48	48	48	48	48	48	48	48	48	48	48	48	48	48	48	48	48	59	48	48	56	48	48	52	48	58	48	48	55	43	48	55	43
		7-20	Interior	50	50	50	50	50	50	50	50	50	50	50	50	50	50	50	50	50	50	50	50	50	50	50	50	50	50	50	50	50	50	50	50	60	50	50	57	50	59	54
			Exposed	50	50	50	50	50	50	50	50	50	50	50	50	50	50	50	50	50	50	50	50	56	50	58	53	50	54	48	50	51	42	59	45	38						
		20-27	Interior	58	58	58	58	58	58	58	58	58	58	58	58	58	58	58	58	58	58	58	58	58	58	58	58	58	58	58	58	58	57	58	58	53	57	56	47	56	53	58
			Exposed	58	58	58	58	58	58	58	58	58	58	58	58	58	58	58	58	58	58	58	58	58	58	58	53	58	55	46	58	52	56	58	59	52	57	56	43	56	53	38
		27-45	Interior	73*	73*	73*	73*	73*	73*	73*	73*	73*	73*	73*	73*	72*	72*	72*	71*	71*	71*	74*	74*	74*	75*	75*	62	61	61	61	59	59	59	58	58	58	57	57	55	55	55	51
			Exposed	73*	73*	73*	73*	73*	73*	73*	73*	73*	73*	73*	65	72*	72*	65	71*	71*	64	72*	64	62	62	62	59	61	61	54	59	58	49	57	54	58	54	51	54	51	59	50

* Cells with an astrisks indicates that the L-foot must be oriented in the Y- direction as indicated in the image.

10 Highlighted cell indicate 3-rail system span. Contact Unirac Engineering Services for support.

~~10~~ Highlighted cell with strikethrough indicate 3-rail system span and module clamp allowable capacity exceeds with 3-rails. 4-Rail system required. Contact Unirac Engineering Services for support.

UNIRAC

ASCE 7-16	II	30 ft	Ss = 1.25	23 sq.ft	PORTRAIT	CROSS-SLOPE	NXT	NXT COMBO	Stronghold BUTYL Rafter #14S
Design Standard	Risk Category	Roof Height	Seismic	Module Area	Orientation	Rail Direction	Rail Type	Clamp	Attachment

SPAN TABLES

Maximum Allowable Rail Spans for Rooftop Solar Panels Parallel to the Roof Surface (inches)

Ground Snow Load (psf)	Wind Exposure Category	Roof Tilt Angle (deg)	Panel Exposure	Basic Wind Speed (mph)																																								
				90			95			100			105			110			115			120			130			140			150			160			170			180		
				Roof Wind Zone																																								
				1	2	3	1	2	3	1	2	3	1	2	3	1	2	3	1	2	3	1	2	3	1	2	3	1	2	3	1	2	3	1	2	3	1	2	3	1	2	3
0	B	0-7	Interior	79	79	79	79	79	79	79	79	79	79	79	76	79	79	73	79	79	70	79	77	68	79	72	64	77	68	60	73	64	56	69	61	51	65	58	43	63	54	36
			Exposed	79	79	73	79	79	70	79	76	67	79	73	64	79	70	62	76	67	60	74	65	57	69	61	52	65	57	42	62	52	34	58	45	30	54	38	40	50	33	35
		7-20	Interior	79	79	79	79	79	79	79	79	77	79	79	74	79	77	71	79	74	68	79	71	66	74	66	62	70	62	58	66	59	52	63	54	44	60	49	36	57	40	32
			Exposed	79	77	71	79	73	68	79	70	65	75	67	62	72	64	60	69	62	57	67	60	54	63	55	45	60	48	35	55	37	30	51	32	40	45	43	35	39	38	31
		20-27	Interior	79	79	79	79	79	79	79	79	79	79	79	79	79	79	78	79	79	75	79	76	72	79	71	68	78	67	63	74	63	60	70	60	55	67	56	51	64	52	42
			Exposed	79	79	78	79	78	74	79	75	71	79	72	68	79	69	65	78	67	63	75	64	61	70	60	56	66	56	50	63	51	39	60	41	32	57	34	27	53	30	35
		27-45	Interior	80	80	80	80	80	80	80	80	80	80	80	80	80	80	80	80	80	78	80	80	75	80	77	71	78	72	66	73	68	63	69	65	60	66	62	56	63	59	52
			Exposed	80	80	80	80	80	77	80	80	74	80	78	71	80	75	68	78	72	66	75	70	64	70	65	60	65	61	55	62	58	50	59	53	40	54	47	34	49	39	29
	C	0-7	Interior	79	79	75	79	79	72	79	78	69	79	75	66	79	72	63	79	69	61	76	67	59	71	63	54	67	59	47	63	55	37	60	50	32	56	42	43	53	36	38
			Exposed	79	72	63	78	69	61	75	66	58	72	63	55	69	61	51	66	59	46	64	56	40	60	51	33	56	41	42	51	34	36	43	30	32	36	40	28	32	35	25
		7-20	Interior	79	79	73	79	75	70	79	72	67	78	69	64	74	66	62	71	64	59	69	62	56	65	57	51	61	52	39	58	42	33	54	34	28	49	30	38	42	41	34
			Exposed	74	66	61	70	63	59	68	61	55	65	58	51	63	54	45	61	51	38	59	45	34	54	35	29	48	30	37	40	39	32	34	34	28	30	30	25	41	27	22
		20-27	Interior	79	79	79	79	79	77	79	77	73	79	74	70	79	71	67	79	69	65	77	66	63	72	62	58	68	58	53	65	53	44	61	46	35	59	37	29	55	32	38
			Exposed	79	71	67	79	68	64	76	65	62	73	62	59	70	60	56	68	58	52	66	54	47	62	47	35	58	36	29	54	31	36	49	41	30	42	36	26	36	32	22
		27-45	Interior	80	80	80	80	80	80	80	80	76	80	80	73	80	77	70	80	74	68	77	72	66	72	67	61	67	63	58	64	60	53	60	56	45	56	51	37	52	44	32
			Exposed	80	77	70	79	73	67	76	70	64	72	68	62	70	65	60	67	63	57	65	61	54	60	56	46	56	51	36	51	41	30	40	34	39	34	30	33	30	40	29
	D	0-7	Interior	79	79	70	79	76	67	79	72	64	79	70	62	76	67	59	73	65	56	71	63	53	66	59	45	62	54	36	59	47	31	55	39	41	51	34	36	43	30	32
			Exposed	76	67	59	73	64	56	70	62	52	67	59	47	64	56	40	62	53	35	60	50	32	55	40	41	50	33	35	41	43	31	34	38	27	30	33	24	40	30	21
		7-20	Interior	79	73	68	79	70	65	75	67	62	71	64	60	69	62	57	67	60	53	64	57	50	61	51	38	57	40	32	52	33	41	46	29	36	40	38	32	34	34	28
			Exposed	69	62	57	66	59	53	63	55	47	61	52	39	59	46	34	56	39	31	54	34	29	47	29	36	39	38	31	33	33	27	44	29	24	38	25	21	34	22	19
		20-27	Interior	79	79	75	79	75	71	79	72	68	79	69	65	77	66	63	75	64	60	72	62	58	68	57	52	64	52	41	61	43	33	57	35	28	53	31	36	49	41	31
			Exposed	77	66	63	74	63	60	71	61	57	68	58	53	66	55	48	64	52	41	62	46	35	58	35	28	53	30	35	47	39	29	40	35	24	34	31	21	30	27	19
		27-45	Interior	80	80	78	80	80	74	80	78	71	80	75	68	77	72	66	74	69	63	71	67	61	67	63	57	63	59	52	59	54	42	55	49	35	50	40	30	40	34	39
			Exposed	77	72	66	73	69	63	70	66	60	67	63	58	65	61	54	62	59	51	60	56	45	55	50	35	48	39	29	37	33	37	32	29	32	43	38	27	38	34	24
10	B	0-7	Interior	66	66	66	66	66	66	66	66	66	66	66	66	66	66	66	66	66	66	66	66	66	66	66	64	66	66	60	66	64	56	66	61	51	65	58	43	63	54	36
			Exposed	66	66	66	66	66	66	66	66	66	66	66	64	66	66	62	66	66	60	66	65	57	66	61	52	65	57	42	62	52	34	58	45	30	54	38	40	50	33	35
		7-20	Interior	66	66	66	66	66	66	66	66	66	66	66	66	66	66	66	66	66	66	66	66	62	66	66	62	66	62	58	66	59	52	63	54	44	60	49	36	57	40	32
			Exposed	66	66	66	66	66	66	66	66	65	66	66	62	66	64	60	66	62	57	66	60	54	63	55	45	60	48	35	55	37	30	51	32	40	45	43	35	39	38	31
		20-27	Interior	76	76	76	76	76	76	76	76	76	76	76	76	76	76	76	76	76	75	76	76	72	76	71	68	76	67	63	74	63	60	70	60	55	67	56	51	64	52	42
			Exposed	76	76	76	76	76	74	76	75	71	76	72	68	76	69	65	76	67	63	75	64	61	70	60	56	66	56	50	63	51	39	60	41	32	57	34	27	53	30	35
		27-45	Interior	79	79	79	79	79	79	79	79	79	79	79	79	79	79	79	79	79	78	79	79	75	79	77	71	78	72	66	73	68	63	69	65	60	66	62	56	63	59	52
			Exposed	79	79	79	79	79	77	79	79	74	79	78	71	79	75	68	78	72	66	75	70	64	70	65	60	65	61	55	62	58	50	59	53	40	54	47	34	49	39	29
	C	0-7	Interior	66	66	66	66	66	66	66	66	66	66	66	66	66	66	63	66	66	61	66	66	59	66	63	54	66	59	47	63	55	37	60	50	32	56	42	43	53	36	38
			Exposed	66	66	63	66	66	61	66	66	58	66	63	55	66	61	51	66	59	46	64	56	40	60	51	33	56	41	42	51	34	36	43	30	32	36	40	28	32	35	25
		7-20	Interior	66	66	66	66	66	66	66	66	66	66	66	64	66	66	62	66	64	59	66	62	56	65	57	51	61	52	39	58	42	33	54	34	28	49	30	38	42	41	34
			Exposed	66	66	61	66	63	59	66	61	55	65	58	51	63	54	45	61	51	38	59	45	34	54	35	29	48	30	37	40	39	32	34	34	28	30	30	25	41	27	22
		20-27	Interior	76	76	76	76	76	76	76	76	73	76	74	70	76	71	67	76	69	65	76	66	63	72	62	58	68	58	53	65	53	44	61	46	35	59	37	29	55	32	38
			Exposed	76	71	67	76	68	64	76	65	62	73	62	59	70	60	56	68	58	52	66	54	47	62	47	35	58	36	29	54	31	36	49	41	30	42	36	26	36	32	22
		27-45	Interior	79	79	79	79	79	79	79	79	76	79	79	73	79	77	70	79	74	68	77	72	66	72	67	61	67	63	58	64	60	53	60	56	45	56	51	37	52	44	32
			Exposed	79	77	70	79	73	67	76	70	64	72	68	62	70	65	60	67	63	57	65	61	54	60	56	46	56	51	36	51	41	30	40	34	39	34	30	33	30	40	29
	D	0-7	Interior	66	66	66	66	66	66	66	66	64	66	66	62	66	66	59	66	65	56	66	63	53	66	59	45	62	54	36	59	47	31	55	39	41	51	34	36	43	30	32
			Exposed	66	66	59	66	64	56	66	62	52	66	59	47	64	56	40	62	53	35	60	50	32	55	40	41	50	33	35	41	43	31	34	38	27	30	33	24	40	30	21
		7-20	Interior	66	66	66	66	66	65	66	66	62	66	64	60	66	62	57	66	60	53	64	57	50	61	51	38	57	40	32	52	33	41	46	29	36	40	38	32	34	34	28
			Exposed	66	62	57	66	59	53	63	55	47	61	52	39	59	46	34	56	39	31	54	34	29	47	29	36	39	38	31	33	33	27	44	29	24	38	25	21	34	22	19
		20-27	Interior	77	77	75	77	75	71	77	72	68	77	69	65	77	66	63	75	64	60	72	62	58	68	57	52	64	52	41	61	43	33	57	35	28	53	31	36	49	41	31
			Exposed	77	66	63	74	63	60	71	61	57	68	58	53	66	55	48	64	52	41	62	46	35	58	35	28	53	30	35	47	39	29	40	35	24	34	31	21	30	27	19
		27-45	Interior	80	80	78	80	80	74	80	78	71	80	75	68	77	72	66	74	69	63	71	67	61	67	63	57	63	59	52	59	54	42	55	49	35	50	40	30	40	34	39
			Exposed	77	72	66	73	69	63	70	66	60	67	63	58	65	61	54	62	59	51	60	56	45	55	50	35	48	39	29	37	33	37	32	29	32	43	38	27	38	34	24
20	B	0-7	Interior	55	55	55	55	55	55	55	55	55	55	55	55	55	55	55	55	55	55	55	55	55	55	55	55	55	55	55	55	55	55	55	55	51	55	55	43	55	54	36
			Exposed	55	55	55	55	55	55	55	55	55	55	55	55	55	55	55	55	55	55	55	55	55	55	55	52	55	55	42	55	52	34	55	45	30	54	38	40	50	33	35
		7-20	Interior	55	55	55	55	55	55	55	55	55	55	55	55	55	55	55	55	55	55	55	55	55	55	55	55	55	55	55	55	55	52	55	54	44	55	49	36	55	40	32
			Exposed	55	55	55	55	55	55	55	55	55	55	55	55	55	55	55	55	55	55	55	55	54	55	55	45	55	48	35	55	37	30	51	32	40	45	43	35	39	38	31
		20-27	Interior	67	67	67	67	67	67	67	67	67	67	67	67	67	67	67	67	67	67	67	67	67	67	67	67	67	67	63	67	63	60	67	60	55	67	56	51	64	52	42
			Exposed	67	67	67	67	67	67	67	67	67	67	67	67	67	67	65	67	67	63	67	64	61	67	60	56	66	56	50	63	51	39	60	41	32	57	34	27	53	30	35
		27-45	Interior	71	71	71	71	71	71	71	71	71	71	71	71	71	71	71	71	71	71	71	71	71	71	71	71	71	71	66	71	68	63	69	65	60	66	62	56	63	59	52
			Exposed	71	71	71	71	71	71	71	71	71	71	71	71	71	71	68	71	71	66	71	70	64	70	65	60	65	61	55	62	58	50	59	53	40	54	47	34	49	39	29
	C	0-7	Interior	55	55	55	55	55	55	55	55	55	55	55	55	55	55	55	55	55	55	55	55	55	55	55	54	55	55	47	55	55	37	55	50	32	55	42	43	53	36	38
			Exposed	55	55	55	55	55	55	55	55	55	55	55	55	55	55	51	55	55	46	55	55	40	55	51	33	55	41	42	51	34	36	43	30	32	36	40	28	32	35	25
		7-20	Interior	55	55	55	55	55	55	55	55	55	55	55	55	55	55	55	55	55	55	55	55	55	55	55	51	55	52	39	55	42	33	54	34	28	49	30	38	42	41	34
			Exposed	55	55	55	55	55	55	55	55	55	55	55	51	55	54	45	55	51	38	55	45	34	54	35	29	48	30	37	40	39	32	34	34	28	30	30	25	41	27	22
		20-27	Interior	67	67	67	67	67	67	67	67	67	67	67	67	67	67	67	67	67	65	67	66	63	67	62	58	67	58	53	65	53	44	61	46	35	59	37	29	55	32	38
			Exposed	67	67	67	67	67	64	67	65	62	67	62	59	67	60	56	67	58	52	66	54	47	62	47	35	58	36	29	54	31	36	49	41	30	42	36	26	36	32	22
		27-45	Interior	71	71	71	71	71	71	71	71	71	71	71	71	71	71	70	71	71	68	71	71	66	70	67	61	67	63	58	64	60	53	60	56	45	56	51	37	52	44	32
			Exposed	71	71	70	71	71	67	71	70	64	71	68	62	70	65	60	67	63	57	65	61	54	60	56	46	56	51	36	51	41	30	40	34	39	34	30	33	30	40	29
	D	0-7	Interior	55	55	55	55	55	55	55	55	55	55	55	55	55	55	55	55	55	55	55	55	53	55	55	45	55	54	36	55	47	31	55	39	41	51	34	36	43	30	32
			Exposed	55	55	55	55	55	55	55	55	52	55	55	47	55	55	40	55	53	35	55	50	32	55	40	41	50	33	35	41	43	31	34	38	27	30	33	24	40	30	21
		7-20	Interior	55	55	55	55	55	55	55	55	55	55	55	55	55	55	55	55	55	53	55	55	50	55	51	38	55	40	32	52	33	41	46	29	36	40	38	32	34	34	28
			Exposed	55	55	55	55	55	53	55	55	47	55	52	39	55	46	34	55	39	31	54	34	29	47	29	36	39	38	31	33	33	27	44	29	24	38	25	21	34	22	19
		20-27	Interior	69	69	69	69	69	69	69	69	68	69	69	65	69	66	63	69	64	60	69	62	58	68	57	52	64	52	41	61	43	33	57	35	28	53	31	36	49	41	31
			Exposed	69	66	63	69	63	60	69	61	57	68	58	53	66	55	48	64	52	41	62	46	35	58	35	28	53	30	35	47	39	29	40	35	24	34	31	21	30	27	19
		27-45	Interior	72	72	72	72	72	72	72	72	71	72	72	68	72	72	66	72	69	63	71	67	61	67	63	57	63	59	52	59	54	42	55	49	35	50	40	30	40	34	39
			Exposed	72	72	66	72	69	63	70	66	60	67	63	58	65	61	54	62	59	51	60	56	45	55	50	35	48	39	29	37	33	37	32	29	32	43	38	27	38	34	24

* Cells with an astrisks indicates that the L-foot must be oriented in the Y- direction as indicated in the image.

10 Highlighted cell indicate 3-rail system span. Contact Unirac Engineering Services for support.

~~10~~ Highlighted cell with strikethrough indicate 3-rail system span and module clamp allowable capacity exceeds with 3-rails. 4-Rail system required. Contact Unirac Engineering Services for support.

ASCE 7-16	II	30 ft	Ss = 1.25	23 sq.ft	PORTRAIT	CROSS-SLOPE	NXT	NXT COMBO	Stronghold BUTYL Rafter #14S
Design Standard	Risk Category	Roof Height	Seismic	Module Area	Orientation	Rail Direction	Rail Type	Clamp	Attachment

SPAN TABLES

Maximum Allowable Rail Spans for Rooftop Solar Panels Parallel to the Roof Surface (inches)

Ground Snow Load (psf)	Wind Exposure Category	Roof Tilt Angle (deg)	Panel Exposure	Basic Wind Speed (mph)																																
				90			95			100			105			110			115			120			130			140			150			160			170			180		
				Roof Wind Zone																																						
				1	2	3	1	2	3	1	2	3	1	2	3	1	2	3	1	2	3	1	2	3	1	2	3	1	2	3	1	2	3	1	2	3	1	2	3	1	2	3
30	B	0-7	Interior	54	54	54	54	54	54	54	54	54	54	54	54	54	54	54	54	54	54	54	54	54	54	54	54	54	54	54	54	54	54	54	54	51	54	54	43	54	54	36
			Exposed	54	54	54	54	54	54	54	54	54	54	54	54	54	54	54	54	54	54	54	54	54	54	54	52	54	54	42	54	52	34	54	45	30	54	38	40	50	33	35
		7-20	Interior	55	55	55	55	55	55	55	55	55	55	55	55	55	55	55	55	55	55	55	55	55	55	55	55	55	55	55	55	55	52	55	54	44	55	49	36	55	40	32
			Exposed	55	55	55	55	55	55	55	55	55	55	55	55	55	55	55	55	55	55	55	55	54	55	55	45	55	48	35	55	37	30	51	32	40	45	43	35	39	38	31
		20-27	Interior	61	61	61	61	61	61	61	61	61	61	61	61	61	61	61	61	61	61	61	61	61	61	61	61	61	61	61	61	61	60	61	60	55	61	56	51	61	52	42
			Exposed	61	61	61	61	61	61	61	61	61	61	61	61	61	61	61	61	61	61	61	61	61	61	60	56	61	56	50	61	51	39	60	41	32	57	34	27	53	30	35
		27-45	Interior	65	65	65	65	65	65	65	65	65	65	65	65	65	65	65	65	65	65	65	65	65	65	65	65	65	65	65	65	65	63	63	63	60	61	61	56	59	59	52
			Exposed	65	65	65	65	65	65	65	65	65	65	65	65	65	65	65	65	65	65	65	65	64	65	65	60	65	61	55	62	58	50	59	53	40	54	47	34	49	39	29
	C	0-7	Interior	54	54	54	54	54	54	54	54	54	54	54	54	54	54	54	54	54	54	54	54	54	54	54	54	54	54	47	54	54	37	54	50	32	54	42	43	53	36	38
			Exposed	54	54	54	54	54	54	54	54	54	54	54	54	54	54	51	54	54	46	54	54	40	54	51	33	54	41	42	51	34	36	43	30	32	36	40	~~28~~	32	35	~~25~~
		7-20	Interior	55	55	55	55	55	55	55	55	55	55	55	55	55	55	55	55	55	55	55	55	55	55	55	51	55	52	39	55	42	33	54	34	28	49	30	38	42	41	34
			Exposed	55	55	55	55	55	55	55	55	55	55	55	51	55	54	45	55	51	38	55	45	34	54	35	29	48	30	37	40	39	32	34	34	~~28~~	30	30	~~25~~	41	~~27~~	~~22~~
		20-27	Interior	61	61	61	61	61	61	61	61	61	61	61	61	61	61	61	61	61	61	61	61	61	61	61	58	61	58	53	61	53	44	61	46	35	59	37	29	55	32	38
			Exposed	61	61	61	61	61	61	61	61	61	61	61	59	61	60	56	61	58	52	61	54	47	61	47	35	58	36	29	54	31	36	49	41	30	42	36	~~26~~	36	32	~~22~~
		27-45	Interior	65	65	65	65	65	65	65	65	65	65	65	65	65	65	65	65	65	65	65	65	65	64	64	61	62	62	58	60	60	53	57	56	45	55	51	37	52	44	32
			Exposed	65	65	65	65	65	65	65	65	64	65	65	62	65	65	60	65	63	57	65	61	54	60	56	46	56	51	36	51	41	30	40	34	39	34	30	33	30	40	29
	D	0-7	Interior	55	55	55	55	55	55	55	55	55	55	55	55	55	55	55	55	55	55	55	55	53	55	55	45	55	54	36	55	47	31	55	39	41	51	34	36	43	30	32
			Exposed	55	55	55	55	55	55	55	55	52	55	55	47	55	55	40	55	53	35	55	50	32	55	40	41	50	33	35	41	43	31	34	38	~~27~~	30	33	~~24~~	40	~~30~~	~~21~~
		7-20	Interior	55	55	55	55	55	55	55	55	55	55	55	55	55	55	55	55	55	53	55	55	50	55	51	38	55	40	32	52	33	41	46	29	36	40	38	32	34	34	~~28~~
			Exposed	55	55	55	55	55	53	55	55	47	55	52	39	55	46	34	55	39	31	54	34	29	47	29	36	39	38	31	33	33	~~27~~	44	~~29~~	~~24~~	38	~~25~~	~~21~~	34	~~22~~	~~19~~
		20-27	Interior	63	63	63	63	63	63	63	63	63	63	63	63	63	63	63	63	63	60	63	62	58	63	57	52	63	52	41	61	43	33	57	35	28	53	31	36	49	41	31
			Exposed	63	63	63	63	63	60	63	61	57	63	58	53	63	55	48	63	52	41	62	46	35	58	35	28	53	30	35	47	39	29	40	35	~~24~~	34	31	~~21~~	30	~~27~~	~~19~~
		27-45	Interior	67	67	67	67	67	67	67	67	67	67	67	67	67	67	66	67	67	63	66	66	61	63	63	57	60	59	52	58	54	42	55	49	35	50	40	30	40	34	39
			Exposed	67	67	66	67	67	63	67	66	60	67	63	58	65	61	54	62	59	51	60	56	45	55	50	35	48	39	29	37	33	37	32	29	32	43	38	~~27~~	38	34	~~24~~
40	B	0-7	Interior	49	49	49	49	49	49	49	49	49	49	49	49	49	49	49	49	49	49	49	49	49	49	49	49	49	49	49	49	49	49	49	49	49	49	49	43	49	49	36
			Exposed	49	49	49	49	49	49	49	49	49	49	49	49	49	49	49	49	49	49	49	49	49	49	49	49	49	49	42	49	49	34	49	45	30	49	38	40	49	33	35
		7-20	Interior	51	51	51	51	51	51	51	51	51	51	51	51	51	51	51	51	51	51	51	51	51	51	51	51	51	51	51	51	51	51	51	51	44	51	49	36	51	40	32
			Exposed	51	51	51	51	51	51	51	51	51	51	51	51	51	51	51	51	51	51	51	51	51	51	51	45	51	48	35	51	37	30	51	32	40	45	43	35	39	38	31
		20-27	Interior	56	56	56	56	56	56	56	56	56	56	56	56	56	56	56	56	56	56	56	56	56	56	56	56	56	56	56	56	56	56	56	56	55	56	56	51	56	52	42
			Exposed	56	56	56	56	56	56	56	56	56	56	56	56	56	56	56	56	56	56	56	56	56	56	56	56	56	56	50	56	51	39	56	41	32	56	34	27	53	30	35
		27-45	Interior	61	61	61	61	61	61	61	61	61	61	61	61	61	61	61	61	61	61	61	61	61	61	61	61	61	61	61	60	60	60	58	58	58	57	57	56	55	55	52
			Exposed	61	61	61	61	61	61	61	61	61	61	61	61	61	61	61	61	61	61	61	61	61	61	61	60	61	61	55	60	58	50	58	53	40	54	47	34	49	39	29
	C	0-7	Interior	49	49	49	49	49	49	49	49	49	49	49	49	49	49	49	49	49	49	49	49	49	49	49	49	49	49	47	49	49	37	49	49	32	49	42	43	49	36	38
			Exposed	49	49	49	49	49	49	49	49	49	49	49	49	49	49	49	49	49	46	49	49	40	49	49	33	49	41	42	49	34	36	43	30	32	36	40	~~28~~	32	35	~~25~~
		7-20	Interior	51	51	51	51	51	51	51	51	51	51	51	51	51	51	51	51	51	51	51	51	51	51	51	51	51	51	39	51	42	33	50	34	28	49	30	38	42	41	34
			Exposed	51	51	51	51	51	51	51	51	51	51	51	51	51	51	45	51	51	38	51	45	34	51	35	29	48	30	37	40	39	32	34	34	~~28~~	30	30	~~25~~	41	~~27~~	~~22~~
		20-27	Interior	56	56	56	56	56	56	56	56	56	56	56	56	56	56	56	56	56	56	56	56	56	56	56	56	56	56	53	56	53	44	56	46	35	55	37	29	54	32	38
			Exposed	56	56	56	56	56	56	56	56	56	56	56	56	56	56	56	56	56	52	56	54	47	56	47	35	56	36	29	54	31	36	49	41	30	42	36	~~26~~	36	32	~~22~~
		27-45	Interior	61	61	61	61	61	61	61	61	61	61	61	61	61	61	61	61	61	61	61	61	61	59	59	59	58	58	58	56	56	53	54	54	45	52	51	37	50	44	32
			Exposed	61	61	61	61	61	61	61	61	61	61	61	61	61	61	60	61	61	57	61	61	54	59	56	46	56	51	36	51	41	30	40	34	39	34	30	33	30	40	29
	D	0-7	Interior	51	51	51	51	51	51	51	51	51	51	51	51	51	51	51	51	51	51	51	51	51	51	51	45	51	51	36	51	47	31	51	39	41	51	34	36	43	30	32
			Exposed	51	51	51	51	51	51	51	51	51	51	51	47	51	51	40	51	51	35	51	50	32	51	40	41	50	33	35	41	43	31	34	38	~~27~~	30	33	~~24~~	40	~~30~~	~~21~~
		7-20	Interior	53	53	53	53	53	53	53	53	53	53	53	53	53	53	53	53	53	53	53	53	50	53	51	38	53	40	32	52	33	41	46	29	36	40	38	32	34	34	~~28~~
			Exposed	53	53	53	53	53	53	53	53	47	53	52	39	53	46	34	53	39	31	53	34	29	47	29	36	39	38	31	33	33	~~27~~	44	~~29~~	~~24~~	38	~~25~~	~~21~~	34	~~22~~	~~19~~
		20-27	Interior	58	58	58	58	58	58	58	58	58	58	58	58	58	58	58	58	58	58	58	58	58	58	57	52	58	52	41	58	43	33	56	35	28	53	31	36	49	41	31
			Exposed	58	58	58	58	58	58	58	58	57	58	58	53	58	55	48	58	52	41	58	46	35	58	35	28	53	30	35	47	39	29	40	35	~~24~~	34	31	~~21~~	30	~~27~~	~~19~~
		27-45	Interior	62	62	62	62	62	62	62	62	62	62	62	62	62	62	62	62	62	62	61	61	61	59	59	57	57	57	52	55	54	42	53	49	35	50	40	30	40	34	39
			Exposed	62	62	62	62	62	62	62	62	60	62	62	58	62	61	54	62	59	51	60	56	45	55	50	35	48	39	29	37	33	37	32	29	32	43	38	~~27~~	38	34	~~24~~
50	B	0-7	Interior	45	45	45	45	45	45	45	45	45	45	45	45	45	45	45	45	45	45	45	45	45	45	45	45	45	45	45	45	45	45	45	45	45	45	45	43	45	45	36
			Exposed	45	45	45	45	45	45	45	45	45	45	45	45	45	45	45	45	45	45	45	45	45	45	45	45	45	45	42	45	45	34	45	45	30	45	38	40	45	33	35
		7-20	Interior	47	47	47	47	47	47	47	47	47	47	47	47	47	47	47	47	47	47	47	47	47	47	47	47	47	47	47	47	47	47	47	47	44	47	47	36	47	40	32
			Exposed	47	47	47	47	47	47	47	47	47	47	47	47	47	47	47	47	47	47	47	47	47	47	47	45	47	47	35	47	37	30	47	32	40	45	43	35	39	38	31
		20-27	Interior	53	53	53	53	53	53	53	53	53	53	53	53	53	53	53	53	53	53	53	53	53	53	53	53	53	53	53	53	53	53	53	53	53	53	53	51	53	52	42
			Exposed	53	53	53	53	53	53	53	53	53	53	53	53	53	53	53	53	53	53	53	53	53	53	53	53	53	53	50	53	51	39	53	41	32	53	34	27	53	30	35
		27-45	Interior	61*	61*	61*	61*	61*	61*	61*	61*	61*	61*	61*	61*	61*	61*	61*	61*	61*	61*	61*	61*	61*	61*	61*	61*	61*	61*	61*	61*	61*	61*	62*	62*	55	54	54	54	52	52	52
			Exposed	61*	61*	61*	61*	61*	61*	61*	61*	61*	61*	61*	61*	61*	61*	61*	61*	61*	61*	61*	61*	61*	61*	61*	60*	61*	61*	55	61*	56	50	55	53	40	54	47	34	49	39	29
	C	0-7	Interior	45	45	45	45	45	45	45	45	45	45	45	45	45	45	45	45	45	45	45	45	45	45	45	45	45	45	45	45	45	37	45	45	32	45	42	43	45	36	38
			Exposed	45	45	45	45	45	45	45	45	45	45	45	45	45	45	45	45	45	45	45	45	40	45	45	33	45	41	42	45	34	36	43	30	32	36	40	~~28~~	32	35	~~25~~
		7-20	Interior	47	47	47	47	47	47	47	47	47	47	47	47	47	47	47	47	47	47	47	47	47	47	47	47	47	47	39	47	42	33	47	34	28	46	30	38	42	41	34
			Exposed	47	47	47	47	47	47	47	47	47	47	47	47	47	47	45	47	47	38	47	45	34	47	35	29	47	30	37	40	39	32	34	34	~~28~~	30	30	~~25~~	41	~~27~~	~~22~~
		20-27	Interior	53	53	53	53	53	53	53	53	53	53	53	53	53	53	53	53	53	53	53	53	53	53	53	53	53	53	53	53	53	44	52	46	35	51	37	29	50	32	38
			Exposed	53	53	53	53	53	53	53	53	53	53	53	53	53	53	53	53	53	52	53	53	47	53	47	35	53	36	29	53	31	36	49	41	30	42	36	~~26~~	36	32	~~22~~
		27-45	Interior	61*	61*	61*	61*	61*	61*	61*	61*	61*	61*	61*	61*	61*	61*	61*	61*	61*	61*	61*	61*	61*	60*	60*	60*	61*	61*	54	53	53	53	51	51	45	49	49	37	48	44	32
			Exposed	61*	61*	61*	61*	61*	61*	61*	61*	61*	61*	61*	61*	61*	61*	60*	61*	61*	57	61*	61*	54	60*	56	46	54	51	36	51	41	30	40	34	39	34	30	33	30	40	29
	D	0-7	Interior	47	47	47	47	47	47	47	47	47	47	47	47	47	47	47	47	47	47	47	47	47	47	47	45	47	47	36	47	47	31	47	39	41	47	34	36	43	30	32
			Exposed	47	47	47	47	47	47	47	47	47	47	47	47	47	47	40	47	47	35	47	47	32	47	40	41	47	33	35	41	43	31	34	38	~~27~~	30	33	~~24~~	40	~~30~~	~~21~~
		7-20	Interior	49	49	49	49	49	49	49	49	49	49	49	49	49	49	49	49	49	49	49	49	49	49	49	38	49	40	32	48	33	41	46	29	36	40	38	32	34	34	~~28~~
			Exposed	49	49	49	49	49	49	49	49	47	49	49	39	49	46	34	49	39	31	49	34	29	47	29	36	39	38	31	33	33	~~27~~	44	~~29~~	~~24~~	38	~~25~~	~~21~~	34	~~22~~	~~19~~
		20-27	Interior	54	54	54	54	54	54	54	54	54	54	54	54	54	54	54	54	54	54	54	54	54	54	54	52	54	52	41	54	43	33	53	35	28	51	31	36	49	41	31
			Exposed	54	54	54	54	54	54	54	54	54	54	54	53	54	54	48	54	52	41	54	46	35	54	35	28	53	30	35	47	39	29	40	35	~~24~~	34	31	~~21~~	30	~~27~~	~~19~~
		27-45	Interior	59	59	59	59	59	59	59	59	59	59	59	59	59	59	59	58	58	58	57	57	57	56	56	56	54	54	52	52	52	45	50	49	35	48	40	30	40	34	39
			Exposed	59	59	59	59	59	59	59	59	59	59	59	58	59	59	54	58	58	51	57	56	45	55	50	35	48	39	29	37	33	37	32	29	32	43	38	~~27~~	38	34	~~24~~

* Cells with an astrisks indicates that the L-foot must be oriented in the Y- direction as indicated in the image.

10 Highlighted cell indicate 3-rail system span. Contact Unirac Engineering Services for support.

~~10~~ Highlighted cell with strikethrough indicate 3-rail system span and module clamp allowable capacity exceeds with 3-rails. 4-Rail system required. Contact Unirac Engineering Services for support.

UNIRAC

ASCE 7-16	II	30 ft	Ss = 1.25	23 sq.ft	PORTRAIT	CROSS-SLOPE	NXT	NXT COMBO	Stronghold BUTYL Rafter #14S
Design Standard	Risk Category	Roof Height	Seismic	Module Area	Orientation	Rail Direction	Rail Type	Clamp	Attachment

SPAN TABLES

Maximum Allowable Rail Spans for Rooftop Solar Panels Parallel to the Roof Surface (inches)

Ground Snow Load (psf)	Wind Exposure Category	Roof Tilt Angle (deg)	Panel Exposure	Basic Wind Speed (mph)																																						
				90			95			100			105			110			115			120			130			140			150			160			170			180		
				Roof Wind Zone																																						
				1	2	3	1	2	3	1	2	3	1	2	3	1	2	3	1	2	3	1	2	3	1	2	3	1	2	3	1	2	3	1	2	3	1	2	3	1	2	3
60	B	0-7	Interior	41	41	41	41	41	41	41	41	41	41	41	41	41	41	41	41	41	41	41	41	41	41	41	41	41	41	41	41	41	41	41	41	41	41	41	41	41	41	36
			Exposed	41	41	41	41	41	41	41	41	41	41	41	41	41	41	41	41	41	41	41	41	41	41	41	41	41	41	41	41	41	34	41	41	30	41	38	40	41	33	35
		7-20	Interior	43	43	43	43	43	43	43	43	43	43	43	43	43	43	43	43	43	43	43	43	43	43	43	43	43	43	43	43	43	43	43	43	43	43	43	36	43	40	32
			Exposed	43	43	43	43	43	43	43	43	43	43	43	43	43	43	43	43	43	43	43	43	43	43	43	43	43	43	35	43	37	30	43	32	40	43	43	35	39	38	31
		20-27	Interior	49	49	49	49	49	49	49	49	49	49	49	49	49	49	49	49	49	49	49	49	49	49	49	49	49	49	49	49	49	49	49	49	49	49	49	49	49	49	42
			Exposed	49	49	49	49	49	49	49	49	49	49	49	49	49	49	49	49	49	49	49	49	49	49	49	49	49	49	49	49	49	39	49	41	32	49	34	27	49	30	35
		27-45	Interior	54*	54*	54*	54*	54*	54*	54*	54*	54*	54*	54*	54*	54*	54*	54*	54*	54*	54*	54*	54*	54*	54*	54*	54*	54*	54*	54*	53*	53*	53*	52*	52*	52*	53*	53*	53*	51*	51*	51*
			Exposed	54*	54*	54*	54*	54*	54*	54*	54*	54*	54*	54*	54*	54*	54*	54*	54*	54*	54*	54*	54*	54*	54*	54*	54*	54*	54*	54*	53*	53*	50	52*	52*	40	53*	47	34	49	39	29
	C	0-7	Interior	41	41	41	41	41	41	41	41	41	41	41	41	41	41	41	41	41	41	41	41	41	41	41	41	41	41	41	41	41	37	41	41	32	41	41	43	41	36	38
			Exposed	41	41	41	41	41	41	41	41	41	41	41	41	41	41	41	41	41	41	41	41	40	41	41	33	41	41	42	41	34	36	41	30	32	36	40	28	32	35	25
		7-20	Interior	43	43	43	43	43	43	43	43	43	43	43	43	43	43	43	43	43	43	43	43	43	43	43	43	43	43	39	43	42	33	43	34	28	43	30	38	42	41	34
			Exposed	43	43	43	43	43	43	43	43	43	43	43	43	43	43	43	43	43	38	43	43	34	43	35	29	43	30	37	40	39	32	34	34	28	30	30	25	41	27	22
		20-27	Interior	49	49	49	49	49	49	49	49	49	49	49	49	49	49	49	49	49	49	49	49	49	49	49	44	49	46	35	48	37	29	47	32	38						
			Exposed	49	49	49	49	49	49	49	49	49	49	49	49	49	49	49	49	49	49	49	49	47	49	47	35	49	36	29	49	31	36	49	41	30	42	36	26	36	32	22
		27-45	Interior	54*	54*	54*	54*	54*	54*	54*	54*	54*	54*	54*	54*	54*	54*	54*	54*	54*	54*	54*	54*	54*	53*	53*	53*	53*	53*	53*	52*	52*	52*	52*	52*	45	52*	52*	37	46	44	32
			Exposed	54*	54*	54*	54*	54*	54*	54*	54*	54*	54*	54*	54*	54*	54*	54*	54*	54*	54*	54*	54*	46	53*	51*	36	51*	41	30	40	34	39	34	30	33	30	40	29			
	D	0-7	Interior	43	43	43	43	43	43	43	43	43	43	43	43	43	43	43	43	43	43	43	43	43	43	43	43	43	43	36	43	43	31	43	39	41	43	34	36	43	30	32
			Exposed	43	43	43	43	43	43	43	43	43	43	43	43	43	43	40	43	43	35	43	43	32	43	40	41	43	33	35	41	43	31	34	38	27	30	33	24	40	30	21
		7-20	Interior	45	45	45	45	45	45	45	45	45	45	45	45	45	45	45	45	45	45	45	45	45	45	45	38	45	40	32	45	33	41	44	29	36	40	38	32	34	34	28
			Exposed	45	45	45	45	45	45	45	45	45	45	45	39	45	45	34	45	39	31	45	34	29	45	29	36	39	38	31	33	33	27	44	29	24	38	25	21	34	22	19
		20-27	Interior	51	51	51	51	51	51	51	51	51	51	51	51	51	51	51	51	51	51	51	51	51	51	51	51	51	51	41	51	43	33	50	35	28	49	31	36	48	41	31
			Exposed	51	51	51	51	51	51	51	51	51	51	51	51	51	51	48	51	51	41	51	46	35	51	35	28	51	30	35	47	39	29	40	35	24	34	31	21	30	27	19
		27-45	Interior	58*	58*	58*	58*	58*	58*	58*	58*	58*	58*	58*	58*	58*	58*	58*	57*	57*	57*	57*	57*	57*	57*	57*	57*	57*	57*	51	49	49	42	48	48	35	46	40	30	40	34	39
			Exposed	58*	58*	58*	58*	58*	58*	58*	58*	58*	58*	58*	58*	58*	58*	54	57*	57*	51	57*	56*	45	53	50	35	48	39	29	37	33	37	32	29	32	43	38	27	38	34	24
70	B	0-7	Interior	38	38	38	38	38	38	38	38	38	38	38	38	38	38	38	38	38	38	38	38	38	38	38	38	38	38	38	38	38	38	38	38	38	38	38	38	38	38	36
			Exposed	38	38	38	38	38	38	38	38	38	38	38	38	38	38	38	38	38	38	38	38	38	38	38	38	38	38	38	38	38	34	38	38	30	38	38	40	38	33	35
		7-20	Interior	40	40	40	40	40	40	40	40	40	40	40	40	40	40	40	40	40	40	40	40	40	40	40	40	40	40	40	40	40	40	40	40	40	40	40	36	40	40	32
			Exposed	40	40	40	40	40	40	40	40	40	40	40	40	40	40	40	40	40	40	40	40	40	40	40	40	40	40	35	40	37	30	40	32	40	40	43	35	39	38	31
		20-27	Interior	49*	49*	49*	49*	49*	49*	49*	49*	49*	49*	49*	49*	49*	49*	49*	49*	49*	49*	49*	49*	49*	49*	49*	49*	49*	49*	49*	49*	49*	49*	49*	49*	49*	49*	49*	49*	49*	49*	42
			Exposed	49*	49*	49*	49*	49*	49*	49*	49*	49*	49*	49*	49*	49*	49*	49*	49*	49*	49*	49*	49*	49*	49*	49*	49*	49*	49*	49*	49*	49*	39	49*	41	32	49*	34	27	49*	30	35
		27-45	Interior	51*	51*	51*	51*	51*	51*	51*	51*	51*	51*	51*	51*	51*	51*	51*	51*	51*	51*	51*	51*	51*	51*	51*	51*	51*	51*	51*	50*	50*	50*	49*	49*	49*	48*	48*	48*	47*	47*	47*
			Exposed	51*	51*	51*	51*	51*	51*	51*	51*	51*	51*	51*	51*	51*	51*	51*	51*	51*	51*	51*	51*	51*	51*	51*	51*	51*	51*	51*	50*	50*	50*	49*	49*	40	48*	47*	34	47*	39	29
	C	0-7	Interior	38	38	38	38	38	38	38	38	38	38	38	38	38	38	38	38	38	38	38	38	38	38	38	38	38	38	38	38	38	37	38	38	32	38	38	43	38	36	38
			Exposed	38	38	38	38	38	38	38	38	38	38	38	38	38	38	38	38	38	38	38	38	38	38	38	33	38	38	42	38	34	36	38	30	32	36	40	28	32	35	25
		7-20	Interior	40	40	40	40	40	40	40	40	40	40	40	40	40	40	40	40	40	40	40	40	40	40	40	40	40	40	39	40	40	33	40	34	28	40	30	38	40	41	34
			Exposed	40	40	40	40	40	40	40	40	40	40	40	40	40	40	40	40	40	38	40	40	34	40	35	29	40	30	37	40	39	32	34	34	28	30	30	25	41	27	22
		20-27	Interior	49*	49*	49*	49*	49*	49*	49*	49*	49*	49*	49*	49*	49*	49*	49*	49*	49*	49*	49*	49*	49*	49*	49*	49*	49*	49*	49*	49*	49*	44	48*	46	35	48*	37	29	47*	32	38
			Exposed	49*	49*	49*	49*	49*	49*	49*	49*	49*	49*	49*	49*	49*	49*	49*	49*	49*	49*	49*	49*	47*	49*	47*	35	49*	36	29	49*	31	36	48*	41	30	42	36	26	36	32	22
		27-45	Interior	51*	51*	51*	51*	51*	51*	51*	51*	51*	51*	51*	51*	51*	51*	51*	51*	51*	51*	51*	51*	51*	50*	50*	50*	49*	49*	50*	48*	48*	48*	46*	46*	45*	45*	45*	37	46*	44	32
			Exposed	51*	51*	51*	51*	51*	51*	51*	51*	51*	51*	51*	51*	51*	51*	51*	51*	51*	51*	51*	51*	45	50*	50*	46*	49*	49*	36	48*	41	30	40	34	39	34	30	33	30	40	29
	D	0-7	Interior	40	40	40	40	40	40	40	40	40	40	40	40	40	40	40	40	40	40	40	40	40	40	40	40	40	40	36	40	40	31	40	39	41	40	34	36	40	30	32
			Exposed	40	40	40	40	40	40	40	40	40	40	40	40	40	40	40	40	40	35	40	40	32	40	40	41	40	33	35	40	43	31	34	38	27	30	33	24	40	30	21
		7-20	Interior	42	42	42	42	42	42	42	42	42	42	42	42	42	42	42	42	42	42	42	42	42	42	42	38	42	40	32	42	33	41	42	29	36	40	38	32	34	34	28
			Exposed	42	42	42	42	42	42	42	42	42	42	42	39	42	42	34	42	39	31	42	34	29	42	29	36	39	38	31	33	33	27	44	29	24	38	25	21	34	22	19
		20-27	Interior	48	48	48	48	48	48	48	48	48	48	48	48	48	48	48	48	48	48	48	48	48	48	48	48	48	48	41	48	43	33	47	35	28	46	31	36	45	41	31
			Exposed	48	48	48	48	48	48	48	48	48	48	48	48	48	48	48	48	41	48	46	35	48	35	28	48	30	35	47	39	29	40	35	24	34	31	21	30	27	19
		27-45	Interior	53*	53*	53*	53*	53*	53*	53*	53*	53*	53*	53*	53*	53*	53*	53*	52*	52*	52*	52*	52*	52*	50*	50*	50*	51*	51*	51*	49*	49*	42	49*	49*	35	45	40	30	40	34	39
			Exposed	53*	53*	53*	53*	53*	53*	53*	53*	53*	53*	53*	53*	53*	53*	53*	52*	52*	51*	52*	52*	45	50*	50*	35	49*	39	29	37	33	37	32	29	32	43	38	27	38	34	24
80	B	0-7	Interior	36	36	36	36	36	36	36	36	36	36	36	36	36	36	36	36	36	36	36	36	36	36	36	36	36	36	36	36	36	36	36	36	36	36	36	36	36	36	36
			Exposed	36	36	36	36	36	36	36	36	36	36	36	36	36	36	36	36	36	36	36	36	36	36	36	36	36	36	36	36	36	34	36	36	30	36	36	40	36	33	35
		7-20	Interior	37	37	37	37	37	37	37	37	37	37	37	37	37	37	37	37	37	37	37	37	37	37	37	37	37	37	37	37	37	37	37	37	37	37	37	37	37	37	32
			Exposed	37	37	37	37	37	37	37	37	37	37	37	37	37	37	37	37	37	37	37	37	37	37	37	37	37	37	35	37	37	30	37	32	40	37	43	35	37	38	31
		20-27	Interior	46*	46*	46*	46*	46*	46*	46*	46*	46*	46*	46*	46*	46*	46*	46*	46*	46*	46*	46*	46*	46*	46*	46*	46*	46*	46*	46*	46*	46*	46*	46*	46*	46*	46*	46*	46*	46*	46*	42*
			Exposed	46*	46*	46*	46*	46*	46*	46*	46*	46*	46*	46*	46*	46*	46*	46*	46*	46*	46*	46*	46*	46*	46*	46*	46*	46*	46*	46*	46*	46*	39	46*	41	32	46*	34	27	46*	30	35
		27-45	Interior	48*	48*	48*	48*	48*	48*	48*	48*	48*	48*	48*	48*	48*	48*	48*	48*	48*	48*	48*	48*	48*	48*	48*	48*	48*	48*	48*	48*	48*	48*	47*	47*	47*	46*	46*	46*	45*	45*	45*
			Exposed	48*	48*	48*	48*	48*	48*	48*	48*	48*	48*	48*	48*	48*	48*	48*	48*	48*	48*	48*	48*	48*	48*	48*	48*	48*	48*	48*	48*	48*	48*	47*	47*	41*	46*	46*	34	45*	40*	29
	C	0-7	Interior	36	36	36	36	36	36	36	36	36	36	36	36	36	36	36	36	36	36	36	36	36	36	36	36	36	36	36	36	36	36	36	36	32	36	36	43	36	36	38
			Exposed	36	36	36	36	36	36	36	36	36	36	36	36	36	36	36	36	36	36	36	36	36	36	36	33	36	36	42	36	34	36	36	30	32	36	40	28	32	35	25
		7-20	Interior	37	37	37	37	37	37	37	37	37	37	37	37	37	37	37	37	37	37	37	37	37	37	37	37	37	37	37	37	37	33	37	34	28	37	30	38	37	41	34
			Exposed	37	37	37	37	37	37	37	37	37	37	37	37	37	37	37	37	37	37	37	37	34	37	35	29	37	30	37	37	39	32	34	34	28	30	30	25	41	27	22
		20-27	Interior	46*	46*	46*	46*	46*	46*	46*	46*	46*	46*	46*	46*	46*	46*	46*	46*	46*	46*	46*	46*	46*	46*	46*	46*	46*	46*	46*	46*	46*	44*	46*	46*	35	45*	37	29	45*	32	38
			Exposed	46*	46*	46*	46*	46*	46*	46*	46*	46*	46*	46*	46*	46*	46*	46*	46*	46*	46*	46*	46*	46*	46*	46*	35	46*	36	29	46*	31	36	46*	41	30	42*	36	26	36	32	22
		27-45	Interior	48*	48*	48*	48*	48*	48*	48*	48*	48*	48*	48*	48*	48*	48*	48*	48*	48*	48*	48*	48*	48*	48*	48*	48*	48*	48*	48*	47*	47*	47*	46*	46*	46*	43*	43*	37	42*	42*	32
			Exposed	48*	48*	48*	48*	48*	48*	48*	48*	48*	48*	48*	48*	48*	48*	48*	48*	48*	48*	48*	48*	48*	48*	48*	46*	47*	47*	36	46*	41*	30	40*	34	39	34	30	33	30	40	29
	D	0-7	Interior	38	38	38	38	38	38	38	38	38	38	38	38	38	38	38	38	38	38	38	38	38	38	38	38	38	38	38	38	38	31	38	38	41	38	34	36	38	30	32
			Exposed	38	38	38	38	38	38	38	38	38	38	38	38	38	38	38	38	38	35	38	38	32	38	38	41	38	33	35	38	43	31	34	38	27	30	33	24	40	30	21
		7-20	Interior	39	39	39	39	39	39	39	39	39	39	39	39	39	39	39	39	39	39	39	39	39	39	39	38	39	39	32	39	33	41	39	29	36	39	38	32	34	34	28
			Exposed	39	39	39	39	39	39	39	39	39	39	39	39	39	39	34	39	39	31	39	34	29	39	29	36	39	38	31	33	33	27	44	29	24	38	25	21	34	22	19
		20-27	Interior	48*	48*	48*	48*	48*	48*	48*	48*	48*	48*	48*	48*	48*	48*	48*	48*	48*	48*	48*	48*	48*	48*	48*	48*	48*	48*	41	48*	43	33	47*	35	28	46*	31	36	43	41	31
			Exposed	48*	48*	48*	48*	48*	48*	48*	48*	48*	48*	48*	48*	48*	48*	48*	48*	48*	41	48*	46*	35	48*	35	28	48*	30	35	47*	39	29	40	35	24	34	31	21	30	27	19
		27-45	Interior	51*	51*	51*	51*	51*	51*	51*	51*	51*	51*	51*	51*	51*	51*	51*	50*	50*	50*	49*	49*	49*	48*	48*	48*	47*	47*	47*	46*	46*	42	44*	44*	35	45*	40	30	40	34	39
			Exposed	51*	51*	51*	51*	51*	51*	51*	51*	51*	51*	51*	51*	51*	51*	51*	50*	50*	50*	49*	49*	45*	48*	48*	35	47*	39	29	37	33	37	32	29	32	43	38	27	38	34	24

* Cells with an astrisks indicates that the L-foot must be oriented in the Y- direction as indicated in the image.

10 Highlighted cell indicate 3-rail system span. Contact Unirac Engineering Services for support.

~~10~~ Highlighted cell with strikethrough indicate 3-rail system span and module clamp allowable capacity exceeds with 3-rails. 4-Rail system required. Contact Unirac Engineering Services for support.

UNIRAC

ASCE 7-16	II	30 ft	Ss = 1.25	23 sq.ft	PORTRAIT	CROSS-SLOPE	NXT	NXT COMBO	Stronghold BUTYL Rafter #14S
Design Standard	Risk Category	Roof Height	Seismic	Module Area	Orientation	Rail Direction	Rail Type	Clamp	Attachment

SPAN TABLES

Maximum Allowable Rail Spans for Rooftop Solar Panels Parallel to the Roof Surface (inches)

Ground Snow Load (psf)	Wind Exposure Category	Roof Tilt Angle (deg)	Panel Exposure	Basic Wind Speed (mph)																																								
				90			95			100			105			110			115			120			130			140			150			160			170			180		
				Roof Wind Zone																																								
				1	2	3	1	2	3	1	2	3	1	2	3	1	2	3	1	2	3	1	2	3	1	2	3	1	2	3	1	2	3	1	2	3	1	2	3	1	2	3
90	B	0-7	Interior	34	34	34	34	34	34	34	34	34	34	34	34	34	34	34	34	34	34	34	34	34	34	34	34	34	34	34	34	34	34	34	34	34	34	34	34	34	34	34	34	34
			Exposed	34	34	34	34	34	34	34	34	34	34	34	34	34	34	34	34	34	34	34	34	34	34	34	34	34	34	34	34	34	34	34	34	30	34	34	40	34	33	35
		7-20	Interior	35	35	35	35	35	35	35	35	35	35	35	35	35	35	35	35	35	35	35	35	35	35	35	35	35	35	35	35	35	35	35	35	35	35	35	35	35	35	32
			Exposed	35	35	35	35	35	35	35	35	35	35	35	35	35	35	35	35	35	35	35	35	35	35	35	35	35	35	35	35	35	30	35	32	40	35	43	35	35	38	31
		20-27	Interior	41*	41*	41*	41*	41*	41*	41*	41*	41*	41*	41*	41*	41*	41*	41*	41*	41*	41*	41*	41*	41*	41*	41*	41*	41*	41*	41*	41*	41*	41*	41*	41*	41*	41*	41*	41*	41*	41*	41*
			Exposed	41*	41*	41*	41*	41*	41*	41*	41*	41*	41*	41*	41*	41*	41*	41*	41*	41*	41*	41*	41*	41*	41*	41*	41*	41*	41*	41*	41*	41*	39*	41*	41*	32	41*	34	27	41*	30	35
		27-45	Interior	43*	43*	43*	43*	43*	43*	43*	43*	43*	43*	43*	43*	43*	43*	43*	43*	43*	43*	43*	43*	43*	43*	43*	43*	43*	43*	43*	43*	43*	43*	43*	43*	43*	43*	43*	43*	43*	43*	43*
			Exposed	43*	43*	43*	43*	43*	43*	43*	43*	43*	43*	43*	43*	43*	43*	43*	43*	43*	43*	43*	43*	43*	43*	43*	43*	43*	43*	43*	43*	43*	43*	43*	43*	40*	43*	43*	34	43*	39*	29
	C	0-7	Interior	34	34	34	34	34	34	34	34	34	34	34	34	34	34	34	34	34	34	34	34	34	34	34	34	34	34	34	34	34	34	34	34	32	34	34	41	34	34	38
			Exposed	34	34	34	34	34	34	34	34	34	34	34	34	34	34	34	34	34	34	34	34	34	34	34	34	34	34	41	34	34	36	34	30	32	34	40	28	32	35	25
		7-20	Interior	35	35	35	35	35	35	35	35	35	35	35	35	35	35	35	35	35	35	35	35	35	35	35	35	35	35	35	35	35	33	35	34	28	35	30	38	35	41	34
			Exposed	35	35	35	35	35	35	35	35	35	35	35	35	35	35	35	35	35	35	35	35	34	35	35	29	35	30	37	35	39	32	34	34	28	30	30	25	41	27	22
		20-27	Interior	41*	41*	41*	41*	41*	41*	41*	41*	41*	41*	41*	41*	41*	41*	41*	41*	41*	41*	41*	41*	41*	41*	41*	41*	41*	41*	41*	41*	41*	41*	41*	41*	35	41*	37*	29	41*	32	38
			Exposed	41*	41*	41*	41*	41*	41*	41*	41*	41*	41*	41*	41*	41*	41*	41*	41*	41*	41*	41*	41*	41*	41*	41*	35	41*	36	29	41*	31	36	41*	41	30	41*	36	26	36	32	22
		27-45	Interior	43*	43*	43*	43*	43*	43*	43*	43*	43*	43*	43*	43*	43*	43*	43*	43*	43*	43*	43*	43*	43*	43*	43*	43*	43*	43*	43*	43*	43*	43*	43*	43*	43*	42*	42*	37*	41*	41*	32
			Exposed	43*	43*	43*	43*	43*	43*	43*	43*	43*	43*	43*	43*	43*	43*	43*	43*	43*	43*	43*	43*	43*	43*	43*	43*	43*	43*	36*	43*	41*	30	40*	34	39	34	30	33	30	40	29
	D	0-7	Interior	36	36	36	36	36	36	36	36	36	36	36	36	36	36	36	36	36	36	36	36	36	36	36	31	36	36	41	36	34	36	36	30	32	36	34	36	36	30	32
			Exposed	36	36	36	36	36	36	36	36	36	36	36	36	36	36	36	36	36	35	36	36	32	36	36	41	36	33	35	36	43	31	34	38	27	30	33	24	40	30	21
		7-20	Interior	37	37	37	37	37	37	37	37	37	37	37	37	37	37	37	37	37	37	37	37	37	37	37	37	37	37	32	37	33	41	37	29	36	37	38	32	34	34	28
			Exposed	37	37	37	37	37	37	37	37	37	37	37	37	37	37	34	37	37	31	37	34	29	37	29	36	37	38	31	33	33	27	44	29	24	38	25	21	34	22	19
		20-27	Interior	46*	46*	46*	46*	46*	46*	46*	46*	46*	46*	46*	46*	46*	46*	46*	46*	46*	46*	46*	46*	46*	46*	46*	46*	46*	46*	41*	46*	43*	33	45*	35	28	44*	31	36	43*	41	31
			Exposed	46*	46*	46*	46*	46*	46*	46*	46*	46*	46*	46*	46*	46*	46*	46*	46*	46*	41*	46*	46*	35	46*	35	28	46*	30	35	46*	39	29	40	35	24	34	31	21	30	27	19
		27-45	Interior	48*	48*	48*	48*	48*	48*	48*	48*	48*	48*	48*	48*	48*	48*	48*	48*	48*	48*	47*	47*	47*	46*	46*	46*	45*	45*	45*	44*	44*	42*	43*	43*	35	42*	40*	30	40*	34	39
			Exposed	48*	48*	48*	48*	48*	48*	48*	48*	48*	48*	48*	48*	48*	48*	48*	48*	48*	48*	47*	47*	45*	46*	46*	35	45*	39*	29	37	33	37	32	29	32	43	38	27	38	34	24
100	B	0-7	Interior	32	32	32	32	32	32	32	32	32	32	32	32	32	32	32	32	32	32	32	32	32	32	32	32	32	32	32	32	32	32	32	32	32	32	32	32	32	32	32
			Exposed	32	32	32	32	32	32	32	32	32	32	32	32	32	32	32	32	32	32	32	32	32	32	32	32	32	32	32	32	32	32	32	32	30	32	32	39	32	32	35
		7-20	Interior	33	33	33	33	33	33	33	33	33	33	33	33	33	33	33	33	33	33	33	33	33	33	33	33	33	33	33	33	33	33	33	33	33	33	33	33	33	33	32
			Exposed	33	33	33	33	33	33	33	33	33	33	33	33	33	33	33	33	33	33	33	33	33	33	33	33	33	33	33	33	33	30	33	32	40	33	41	35	33	38	31
		20-27	Interior	39*	39*	39*	39*	39*	39*	39*	39*	39*	39*	39*	39*	39*	39*	39*	39*	39*	39*	39*	39*	39*	39*	39*	39*	39*	39*	39*	39*	39*	39*	39*	39*	39*	39*	39*	39*	39*	39*	39*
			Exposed	39*	39*	39*	39*	39*	39*	39*	39*	39*	39*	39*	39*	39*	39*	39*	39*	39*	39*	39*	39*	39*	39*	39*	39*	39*	39*	39*	39*	39*	39*	39*	39*	32	39*	34*	27	39*	30	35
		27-45	Interior	39*	39*	39*	39*	39*	39*	39*	39*	39*	39*	39*	39*	39*	39*	39*	39*	39*	39*	39*	39*	39*	39*	39*	39*	39*	39*	39*	39*	39*	39*	39*	39*	39*	39*	39*	39*	39*	39*	39*
			Exposed	39*	39*	39*	39*	39*	39*	39*	39*	39*	39*	39*	39*	39*	39*	39*	39*	39*	39*	39*	39*	39*	39*	39*	39*	39*	39*	39*	39*	39*	39*	39*	39*	39*	39*	39*	34*	39*	39*	29
	C	0-7	Interior	32	32	32	32	32	32	32	32	32	32	32	32	32	32	32	32	32	32	32	32	32	32	32	32	32	32	32	32	32	32	32	32	32	32	32	39	32	32	38
			Exposed	32	32	32	32	32	32	32	32	32	32	32	32	32	32	32	32	32	32	32	32	32	32	32	32	32	32	39	32	32	36	32	30	32	32	39	28	32	35	25
		7-20	Interior	33	33	33	33	33	33	33	33	33	33	33	33	33	33	33	33	33	33	33	33	33	33	33	33	33	33	33	33	33	33	33	33	28	33	30	38	33	41	34
			Exposed	33	33	33	33	33	33	33	33	33	33	33	33	33	33	33	33	33	33	33	33	33	33	33	29	33	30	37	33	39	32	33	34	28	30	30	25	41	27	22
		20-27	Interior	39*	39*	39*	39*	39*	39*	39*	39*	39*	39*	39*	39*	39*	39*	39*	39*	39*	39*	39*	39*	39*	39*	39*	39*	39*	39*	39*	39*	39*	39*	39*	39*	35*	39*	37*	29	39*	32	38
			Exposed	39*	39*	39*	39*	39*	39*	39*	39*	39*	39*	39*	39*	39*	39*	39*	39*	39*	39*	39*	39*	39*	39*	39*	35*	39*	36*	29	39*	31	36	39*	41	30	39*	36	26	36*	32	22
		27-45	Interior	39*	39*	39*	39*	39*	39*	39*	39*	39*	39*	39*	39*	39*	39*	39*	39*	39*	39*	39*	39*	39*	39*	39*	39*	39*	39*	39*	39*	39*	39*	39*	39*	39*	39*	39*	37*	39*	39*	32*
			Exposed	39*	39*	39*	39*	39*	39*	39*	39*	39*	39*	39*	39*	39*	39*	39*	39*	39*	39*	39*	39*	39*	39*	39*	39*	39*	39*	36*	39*	39*	30	39*	34*	39	34*	30	33	30	40	29
	D	0-7	Interior	34	34	34	34	34	34	34	34	34	34	34	34	34	34	34	34	34	34	34	34	34	34	34	31	34	34	41	34	34	36	34	30	32	34	34	36	34	30	32
			Exposed	34	34	34	34	34	34	34	34	34	34	34	34	34	34	34	34	34	34	34	34	32	34	34	41	34	33	35	34	41	31	34	38	27	30	33	24	40	30	21
		7-20	Interior	35	35	35	35	35	35	35	35	35	35	35	35	35	35	35	35	35	35	35	35	35	35	35	35	35	35	32	35	33	41	35	29	36	35	38	32	34	34	28
			Exposed	35	35	35	35	35	35	35	35	35	35	35	35	35	35	34	35	35	31	35	34	29	35	29	36	35	38	31	33	33	27	43	29	24	38	25	21	34	22	19
		20-27	Interior	41*	41*	41*	41*	41*	41*	41*	41*	41*	41*	41*	41*	41*	41*	41*	41*	41*	41*	41*	41*	41*	41*	41*	41*	41*	41*	41*	41*	41*	33	41*	35	28	41*	31	36	40*	41	31
			Exposed	41*	41*	41*	41*	41*	41*	41*	41*	41*	41*	41*	41*	41*	41*	41*	41*	41*	41*	41*	41*	35	41*	35	28	41*	30	35	41*	39	29	40*	35	24	34	31	21	30	27	19
		27-45	Interior	43*	43*	43*	43*	43*	43*	43*	43*	43*	43*	43*	43*	43*	43*	43*	43*	43*	43*	43*	43*	43*	43*	43*	43*	43*	43*	43*	42*	42*	42*	41*	41*	35	40*	40*	30	39*	34	39
			Exposed	43*	43*	43*	43*	43*	43*	43*	43*	43*	43*	43*	43*	43*	43*	43*	43*	43*	43*	43*	43*	43*	43*	43*	35	43*	39*	29	38*	33	37	32	29	32	43	38	27	38	34	24

* Cells with an astrisks indicates that the L-foot must be oriented in the Y- direction as indicated in the image.

10 Highlighted cell indicate 3-rail system span. Contact Unirac Engineering Services for support.

~~10~~ Highlighted cell with strikethrough indicate 3-rail system span and module clamp allowable capacity exceeds with 3-rails. 4-Rail system required. Contact Unirac Engineering Services for support.

UNIRAC

ASCE 7-16	II	30 ft	Ss = 1.25	23 sq.ft	LANDSCAPE	CROSS-SLOPE	NXT	NXT COMBO	Stronghold BUTYL Rafter #14S
Design Standard	Risk Category	Roof Height	Seismic	Module Area	Orientation	Rail Direction	Rail Type	Clamp	Attachment

SPAN TABLES

Maximum Allowable Rail Spans for Rooftop Solar Panels Parallel to the Roof Surface (inches)

Ground Snow Load (psf)	Wind Exposure Category	Roof Tilt Angle (deg)	Panel Exposure	Basic Wind Speed (mph)																																						
				90			95			100			105			110			115			120			130			140			150			160			170			180		
				Roof Wind Zone																																						
				1	2	3	1	2	3	1	2	3	1	2	3	1	2	3	1	2	3	1	2	3	1	2	3	1	2	3	1	2	3	1	2	3	1	2	3	1	2	3
0	B	0-7	Interior	101	101	101	101	101	101	101	101	100	101	101	95	101	101	91	101	101	87	101	96	83	101	89	77	96	83	72	90	78	68	85	74	64	80	70	62	76	67	59
			Exposed	101	101	91	101	99	86	101	95	82	101	90	78	100	86	75	96	83	72	92	80	69	85	74	65	80	70	61	75	66	58	71	63	55	67	60	51	64	57	59
		7-20	Interior	102	102	102	102	102	102	102	102	97	102	102	92	102	96	88	102	92	84	102	88	80	92	81	74	86	75	69	82	70	65	77	66	62	74	63	59	70	61	56
			Exposed	102	96	87	102	91	83	101	86	78	93	82	75	89	78	71	86	75	68	83	72	66	78	66	62	73	63	59	69	60	55	66	56	51	63	53	59	61	60	56
		20-27	Interior	102	102	102	102	102	102	102	102	102	102	102	102	102	102	99	102	100	94	102	96	90	102	88	82	99	82	76	92	76	71	87	72	66	83	68	63	79	64	60
			Exposed	102	102	99	102	99	93	102	94	88	102	89	83	102	85	79	98	81	75	94	78	72	87	72	67	82	67	63	78	64	59	74	61	55	70	58	52	67	55	46
		27-45	Interior	103	103	103	103	103	103	103	103	103	103	103	103	103	103	103	103	103	98	103	103	94	103	97	87	98	90	81	91	84	76	85	79	71	80	75	68	75	71	64
			Exposed	103	103	103	103	103	97	103	103	92	103	98	88	103	93	84	98	89	81	93	86	77	85	79	72	79	74	67	74	70	63	69	66	60	65	63	57	63	60	54
	C	0-7	Interior	101	101	94	101	101	89	101	98	85	101	93	81	101	89	77	99	86	74	95	82	71	88	77	66	82	72	63	77	68	60	73	64	57	69	62	53	66	59	60
			Exposed	101	89	77	98	85	73	93	81	70	89	77	67	85	74	64	82	71	62	79	69	61	73	64	57	69	61	53	65	58	60	62	54	56	59	61	53	56	59	49
		7-20	Interior	102	100	91	102	94	86	102	89	81	98	85	77	92	81	74	89	77	71	85	74	68	80	68	63	75	64	60	71	61	57	68	58	53	65	55	60	62	52	58
			Exposed	92	80	74	88	76	70	84	72	66	81	69	64	78	66	62	75	64	60	72	62	58	68	59	54	64	54	60	61	51	57	58	58	53	55	55	49	62	52	44
		20-27	Interior	102	102	102	102	102	96	102	97	91	102	92	86	102	88	82	101	84	78	97	80	75	90	74	69	85	69	64	80	65	61	76	62	58	72	60	54	69	57	50
			Exposed	102	88	82	100	83	77	95	79	73	91	75	70	87	72	67	84	69	64	81	66	62	76	62	58	72	59	53	68	56	47	65	52	57	62	60	52	60	57	46
		27-45	Interior	103	103	103	103	103	101	103	103	96	103	101	91	103	97	87	102	92	83	97	89	80	88	82	74	82	76	69	76	72	65	71	68	62	67	64	59	64	62	56
			Exposed	103	96	87	100	91	82	94	87	78	90	83	75	85	79	72	81	76	69	78	73	66	72	68	62	67	64	59	63	61	54	61	58	51	58	55	59	55	52	55
	D	0-7	Interior	101	100	86	101	95	82	101	90	78	100	86	75	95	83	71	91	79	69	88	76	66	81	71	62	76	67	59	72	63	55	68	61	52	64	58	59	62	54	56
			Exposed	95	82	71	90	78	68	86	75	65	82	72	63	79	69	61	76	66	59	73	64	57	68	61	52	64	57	59	61	53	55	58	60	52	55	58	47	52	54	42
		7-20	Interior	102	91	83	101	86	78	93	82	75	89	78	71	86	74	68	83	71	65	80	68	63	75	64	60	70	61	56	67	57	52	63	54	59	61	61	56	59	58	53
			Exposed	85	74	68	82	70	65	78	67	62	75	64	60	73	62	58	70	60	56	68	59	53	64	54	60	61	60	56	57	57	52	54	53	47	61	50	41	58	44	37
		20-27	Interior	102	99	93	102	94	88	102	89	83	102	85	79	97	81	75	93	77	72	90	74	69	84	69	64	79	64	60	75	61	56	71	59	52	67	55	46	65	52	57
			Exposed	97	81	75	92	76	71	88	73	67	85	69	64	81	66	62	79	64	60	76	62	58	71	59	53	67	55	45	64	51	55	61	59	51	58	55	42	55	52	37
		27-45	Interior	103	103	98	103	103	92	103	98	88	102	93	84	97	89	80	92	85	77	88	82	74	81	76	69	75	71	64	70	66	61	66	63	58	63	61	54	61	58	51
			Exposed	97	89	80	91	84	76	86	80	72	82	77	69	78	73	66	75	70	64	72	68	62	66	64	58	63	60	54	60	57	48	56	53	57	53	61	53	49	58	48
10	B	0-7	Interior	90	90	90	90	90	90	90	90	90	90	90	90	90	90	90	90	90	87	90	90	83	90	89	77	90	83	72	90	78	68	85	74	64	80	70	62	76	67	59
			Exposed	90	90	90	90	90	86	90	90	82	90	90	78	90	86	75	90	83	72	90	80	69	85	74	65	80	70	61	75	66	58	71	63	55	67	60	51	64	57	59
		7-20	Interior	91	91	91	91	91	91	91	91	91	91	91	91	91	91	88	91	91	84	91	88	80	91	81	74	86	75	69	82	70	65	77	66	62	74	63	59	70	61	56
			Exposed	91	91	87	91	91	83	91	86	78	91	82	75	89	78	71	86	75	68	83	72	66	78	66	62	73	63	59	69	60	55	66	56	51	63	53	59	61	60	56
		20-27	Interior	99	99	99	99	99	99	99	99	99	99	99	99	99	99	99	99	99	94	99	96	90	99	88	82	99	82	76	92	76	71	87	72	66	83	68	63	79	64	60
			Exposed	99	99	99	99	99	93	99	94	88	99	89	83	99	85	79	98	81	75	94	78	72	87	72	67	82	67	63	78	64	59	74	61	55	70	58	52	67	55	46
		27-45	Interior	101	101	101	101	101	101	101	101	101	101	101	101	101	101	101	101	101	98	101	101	94	101	97	87	98	90	81	91	84	76	85	79	71	80	75	68	75	71	64
			Exposed	101	101	101	101	101	97	101	101	92	101	98	88	101	93	84	98	89	81	93	86	77	85	79	72	79	74	67	74	70	63	69	66	60	65	63	57	63	60	54
	C	0-7	Interior	90	90	90	90	90	89	90	90	85	90	90	81	90	89	77	90	86	74	90	82	71	88	77	66	82	72	63	77	68	60	73	64	57	69	62	53	66	59	60
			Exposed	90	89	77	90	85	73	90	81	70	89	77	67	85	74	64	82	71	62	79	69	61	73	64	57	69	61	53	65	58	60	62	54	56	59	61	53	56	59	49
		7-20	Interior	91	91	91	91	91	86	91	89	81	91	85	77	91	81	74	89	77	71	85	74	68	80	68	63	75	64	60	71	61	57	68	58	53	65	55	60	62	52	58
			Exposed	91	80	74	88	76	70	84	72	66	81	69	64	78	66	62	75	64	60	72	62	58	68	59	54	64	54	60	61	51	57	58	58	53	55	55	49	62	52	44
		20-27	Interior	99	99	99	99	99	96	99	97	91	99	92	86	99	88	82	99	84	78	97	80	75	90	74	69	85	69	64	80	65	61	76	62	58	72	60	54	69	57	50
			Exposed	99	88	82	99	83	77	95	79	73	91	75	70	87	72	67	84	69	64	81	66	62	76	62	58	72	59	53	68	56	47	65	52	57	62	60	52	60	57	46
		27-45	Interior	101	101	101	101	101	101	101	101	96	101	101	91	101	97	87	101	92	83	97	89	80	88	82	74	82	76	69	76	72	65	71	68	62	67	64	59	64	62	56
			Exposed	101	96	87	100	91	82	94	87	78	90	83	75	85	79	72	81	76	69	78	73	66	72	68	62	67	64	59	63	61	54	61	58	51	58	55	59	55	52	55
	D	0-7	Interior	90	90	86	90	90	82	90	90	78	90	86	75	90	83	71	90	79	69	88	76	66	81	71	62	76	67	59	72	63	55	68	61	52	64	58	59	62	54	56
			Exposed	90	82	71	90	78	68	86	75	65	82	72	63	79	69	61	76	66	59	73	64	57	68	61	52	64	57	59	61	53	55	58	60	52	55	58	47	52	54	42
		7-20	Interior	91	91	83	91	86	78	91	82	75	89	78	71	86	74	68	83	71	65	80	68	63	75	64	60	70	61	56	67	57	52	63	54	59	61	61	56	59	58	53
			Exposed	85	74	68	82	70	65	78	67	62	75	64	60	73	62	58	70	60	56	68	59	53	64	54	60	61	60	56	57	57	52	54	53	47	61	50	41	58	44	37
		20-27	Interior	100	99	93	100	94	88	100	89	83	100	85	79	97	81	75	93	77	72	90	74	69	84	69	64	79	64	60	75	61	56	71	59	52	67	55	46	65	52	57
			Exposed	97	81	75	92	76	71	88	73	67	85	69	64	81	66	62	79	64	60	76	62	58	71	59	53	67	55	45	64	51	55	61	59	51	58	55	42	55	52	37
		27-45	Interior	102	102	98	102	102	92	102	98	88	102	93	84	97	89	80	92	85	77	88	82	74	81	76	69	75	71	64	70	66	61	66	63	58	63	61	54	61	58	51
			Exposed	97	89	80	91	84	76	86	80	72	82	77	69	78	73	66	75	70	64	72	68	62	66	64	58	63	60	54	60	57	48	56	53	57	53	61	53	49	58	48
20	B	0-7	Interior	77	77	77	77	77	77	77	77	77	77	77	77	77	77	77	77	77	77	77	77	77	77	77	72	77	77	72	77	77	68	77	74	64	77	70	62	76	67	59
			Exposed	77	77	77	77	77	77	77	77	77	77	77	77	77	77	75	77	77	72	77	77	69	77	74	65	77	70	61	75	66	58	71	63	55	67	60	51	64	57	59
		7-20	Interior	77	77	77	77	77	77	77	77	77	77	77	77	77	77	77	77	77	77	77	77	77	77	77	74	77	75	69	77	70	65	77	66	62	74	63	59	70	61	56
			Exposed	77	77	77	77	77	77	77	77	77	77	77	77	75	77	77	71	77	75	68	77	72	66	77	66	62	73	63	59	69	60	55	66	56	51	63	53	59	61	60	56
		20-27	Interior	92	92	92	92	92	92	92	92	92	92	92	92	92	92	92	92	92	92	92	92	90	92	88	82	92	82	76	92	76	71	87	72	66	83	68	63	79	64	60
			Exposed	92	92	92	92	92	92	92	92	88	92	89	83	92	85	79	92	81	75	92	78	72	87	72	67	82	67	63	78	64	59	74	61	55	70	58	52	67	55	46
		27-45	Interior	95	95	95	95	95	95	95	95	95	95	95	95	95	95	95	95	95	95	95	95	94	95	95	87	95	90	81	91	84	76	85	79	71	80	75	68	75	71	64
			Exposed	95	95	95	95	95	95	95	95	92	95	95	88	95	93	84	95	89	81	93	86	77	85	79	72	79	74	67	74	70	63	69	66	60	65	63	57	63	60	54
	C	0-7	Interior	77	77	77	77	77	77	77	77	77	77	77	77	77	77	77	77	77	74	77	77	71	77	77	66	77	72	63	77	68	60	73	64	57	69	62	53	66	59	60
			Exposed	77	77	77	77	77	73	77	77	70	77	77	67	77	74	64	77	71	62	77	69	61	73	64	57	69	61	53	65	58	60	62	54	56	59	61	53	56	59	49
		7-20	Interior	77	77	77	77	77	77	77	77	77	77	77	77	77	77	74	77	77	71	77	74	68	77	68	63	75	64	60	71	61	57	68	58	53	65	55	60	62	52	58
			Exposed	77	77	74	77	76	70	77	72	66	77	69	64	77	66	62	75	64	60	72	62	58	68	59	54	64	54	60	61	51	57	58	58	53	55	55	49	62	52	44
		20-27	Interior	92	92	92	92	92	92	92	92	91	92	92	86	92	88	82	92	84	78	92	80	75	90	74	69	85	69	64	80	65	61	76	62	58	72	60	54	69	57	50
			Exposed	92	88	82	92	83	77	92	79	73	91	75	70	87	72	67	84	69	64	81	66	62	76	62	58	72	59	53	68	56	47	65	52	57	62	60	52	60	57	46
		27-45	Interior	95	95	95	95	95	95	95	95	95	95	95	91	95	95	87	95	92	83	95	89	80	88	82	74	82	76	69	76	72	65	71	68	62	67	64	59	64	62	56
			Exposed	95	95	87	95	91	82	94	87	78	90	83	75	85	79	72	81	76	69	78	73	66	72	68	62	67	64	59	63	61	54	61	58	51	58	55	59	55	52	55
	D	0-7	Interior	77	77	77	77	77	77	77	77	77	77	77	71	77	77	71	77	77	69	77	76	66	77	71	62	76	67	59	72	63	55	68	61	52	64	58	59	62	54	56
			Exposed	77	77	71	77	77	68	77	75	65	77	72	63	77	69	61	76	66	59	73	64	57	68	61	52	64	57	59	61	53	55	58	60	52	55	58	47	52	54	42
		7-20	Interior	77	77	77	77	77	77	77	77	75	77	77	71	77	74	68	77	71	65	77	68	63	75	64	60	70	61	56	67	57	52	63	54	59	61	61	56	59	58	53
			Exposed	77	74	68	77	70	65	77	67	62	75	64	60	73	62	58	70	60	56	68	59	53	64	54	60	61	60	56	57	57	52	54	53	47	61	50	41	58	44	37
		20-27	Interior	93	93	93	93	93	88	93	89	83	93	85	79	93	81	75	93	77	72	90	74	69	84	69	64	79	64	60	75	61	56	71	59	52	67	55	46	65	52	57
			Exposed	93	81	75	92	76	71	88	73	67	85	69	64	81	66	62	79	64	60	76	62	58	71	59	53	67	55	45	64	51	55	61	59	51	58	55	42	55	52	37
		27-45	Interior	96	96	96	96	96	92	96	96	88	96	93	84	96	89	80	92	85	77	88	82	74	81	76	69	75	71	64	70	66	61	66	63	58	63	61	54	61	58	51
			Exposed	96	89	80	91	84	76	86	80	72	82	77	69	78	73	66	75	70	64	72	68	62	66	64	58	63	60	54	60	57	48	56	53	57	53	61	53	49	58	48

* Cells with an astrisks indicates that the L-foot must be oriented in the Y- direction as indicated in the image.

10 Highlighted cell indicate 3-rail system span. Contact Unirac Engineering Services for support.

~~10~~ Highlighted cell with strikethrough indicate 3-rail system span and module clamp allowable capacity exceeds with 3-rails. 4-Rail system required. Contact Unirac Engineering Services for support.

UNIRAC

ASCE 7-16	II	30 ft	Ss = 1.25	23 sq.ft	LANDSCAPE	CROSS-SLOPE	NXT	NXT COMBO	Stronghold BUTYL Rafter #14S
Design Standard	Risk Category	Roof Height	Seismic	Module Area	Orientation	Rail Direction	Rail Type	Clamp	Attachment

SPAN TABLES

Maximum Allowable Rail Spans for Rooftop Solar Panels Parallel to the Roof Surface (inches)

Ground Snow Load (psf)	Wind Exposure Category	Roof Tilt Angle (deg)	Panel Exposure	Basic Wind Speed (mph)																																						
				90			95			100			105			110			115			120			130			140			150			160			170			180		
				Roof Wind Zone																																						
				1	2	3	1	2	3	1	2	3	1	2	3	1	2	3	1	2	3	1	2	3	1	2	3	1	2	3	1	2	3	1	2	3	1	2	3	1	2	3
30	B	0-7	Interior	76	76	76	76	76	76	76	76	76	76	76	76	76	76	76	76	76	76	76	76	76	76	76	76	76	76	72	76	76	68	76	74	64	76	70	62	76	67	59
			Exposed	76	76	76	76	76	76	76	76	76	76	76	76	76	76	75	76	76	72	76	76	69	76	74	65	76	70	61	75	66	58	71	63	55	67	60	51	64	57	59
		7-20	Interior	77	77	77	77	77	77	77	77	77	77	77	77	77	77	77	77	77	77	77	77	77	77	77	74	77	75	69	77	70	65	77	66	62	74	63	59	70	61	56
			Exposed	77	77	77	77	77	77	77	77	77	77	77	75	77	77	71	77	75	68	77	72	66	77	66	62	73	63	59	69	60	55	66	56	51	63	53	59	61	60	56
		20-27	Interior	85	85	85	85	85	85	85	85	85	85	85	85	85	85	85	85	85	85	85	85	85	85	85	82	85	82	76	85	76	71	85	72	66	83	68	63	79	64	60
			Exposed	85	85	85	85	85	85	85	85	85	85	85	83	85	85	79	85	81	75	85	78	72	85	72	67	82	67	63	78	64	59	74	61	55	70	58	52	67	55	46
		27-45	Interior	90	90	90	90	90	90	90	90	90	90	90	90	90	90	90	90	90	90	90	90	90	90	90	87	90	90	81	90	84	76	85	79	71	80	75	68	75	71	64
			Exposed	90	90	90	90	90	90	90	90	90	90	90	88	90	90	84	90	89	81	90	86	77	85	79	72	79	74	67	74	70	63	69	66	60	65	63	57	63	60	54
	C	0-7	Interior	76	76	76	76	76	76	76	76	76	76	76	76	76	76	76	76	76	74	76	76	71	76	76	66	76	72	63	76	68	60	73	64	57	69	62	53	66	59	60
			Exposed	76	76	76	76	76	73	76	76	70	76	76	67	76	74	64	76	71	62	76	69	61	73	64	57	69	61	53	65	58	60	62	54	56	59	61	53	56	59	49
		7-20	Interior	77	77	77	77	77	77	77	77	77	77	77	77	77	77	74	77	77	71	77	74	68	77	68	63	75	64	60	71	61	57	68	58	53	65	55	60	62	52	58
			Exposed	77	77	74	77	76	70	77	72	66	77	69	64	77	66	62	75	64	60	72	62	58	68	59	54	64	54	60	61	51	57	58	58	53	55	55	49	62	52	44
		20-27	Interior	85	85	85	85	85	85	85	85	85	85	85	85	85	85	82	85	84	78	85	80	75	85	74	69	85	69	64	80	65	61	76	62	58	72	60	54	69	57	50
			Exposed	85	85	82	85	83	77	85	79	73	85	75	70	85	72	67	84	69	64	81	66	62	76	62	58	72	59	53	68	56	47	65	52	57	62	60	52	60	57	46
		27-45	Interior	90	90	90	90	90	90	90	90	90	90	90	90	90	90	87	90	90	83	90	89	80	88	82	74	82	76	69	76	72	65	71	68	62	67	64	59	64	62	56
			Exposed	90	90	87	90	90	82	90	87	78	90	83	75	85	79	72	81	76	69	78	73	66	72	68	62	67	64	59	63	61	54	61	58	51	58	55	59	55	52	55
	D	0-7	Interior	77	77	77	77	77	77	77	77	77	77	77	75	77	77	71	77	77	69	77	76	66	77	71	62	76	67	59	72	63	55	68	61	52	64	58	59	62	54	56
			Exposed	77	77	71	77	77	68	77	75	65	77	72	63	77	69	61	76	66	59	73	64	57	68	61	52	64	57	59	61	53	55	58	60	52	55	58	47	52	54	42
		7-20	Interior	77	77	77	77	77	77	77	77	75	77	77	71	77	74	68	77	71	65	77	68	63	75	64	60	70	61	56	67	57	52	63	54	59	61	61	56	59	58	53
			Exposed	77	74	68	77	70	65	77	67	62	75	64	60	73	62	58	70	60	56	68	59	53	64	54	60	61	60	56	57	57	52	54	53	47	61	50	41	58	44	37
		20-27	Interior	87	87	87	87	87	87	87	87	83	87	85	79	87	81	75	87	77	72	87	74	69	84	69	64	79	64	60	75	61	56	71	59	52	67	55	46	65	52	57
			Exposed	87	81	75	87	76	71	87	73	67	85	69	64	81	66	62	79	64	60	76	62	58	71	59	53	67	55	45	64	51	55	61	59	51	58	55	42	55	52	37
		27-45	Interior	91	91	91	91	91	91	91	91	88	91	91	84	91	89	80	91	85	77	88	82	74	81	76	69	75	71	64	70	66	61	66	63	58	63	61	54	61	58	51
			Exposed	91	89	80	91	84	76	86	80	72	82	77	69	78	73	66	75	70	64	72	68	62	66	64	58	63	60	54	60	57	48	56	53	57	53	61	53	49	58	48
40	B	0-7	Interior	69	69	69	69	69	69	69	69	69	69	69	69	69	69	69	69	69	69	69	69	69	69	69	69	69	69	69	69	69	68	69	69	64	69	69	62	69	67	59
			Exposed	69	69	69	69	69	69	69	69	69	69	69	69	69	69	69	69	69	69	69	69	69	69	69	65	69	69	61	69	66	58	69	63	55	67	60	51	64	57	59
		7-20	Interior	71	71	71	71	71	71	71	71	71	71	71	71	71	71	71	71	71	71	71	71	71	71	71	71	71	71	69	71	70	65	71	66	62	71	63	59	70	61	56
			Exposed	71	71	71	71	71	71	71	71	71	71	71	71	71	71	71	71	71	68	71	71	66	71	66	62	71	63	59	69	60	55	66	56	51	63	53	59	61	60	56
		20-27	Interior	79	79	79	79	79	79	79	79	79	79	79	79	79	79	79	79	79	79	79	79	79	79	79	79	79	79	76	79	76	71	79	72	66	79	68	63	79	64	60
			Exposed	79	79	79	79	79	79	79	79	79	79	79	79	79	79	79	79	79	75	79	78	72	79	72	67	79	67	63	78	64	59	74	61	55	70	58	52	67	55	46
		27-45	Interior	85	85	85	85	85	85	85	85	85	85	85	85	85	85	85	85	85	85	85	85	85	85	85	85	85	85	81	84	84	76	81	79	71	79	75	68	75	71	64
			Exposed	85	85	85	85	85	85	85	85	85	85	85	85	85	85	84	85	85	81	85	85	77	85	79	72	79	74	67	74	70	63	69	66	60	65	63	57	63	60	54
	C	0-7	Interior	69	69	69	69	69	69	69	69	69	69	69	69	69	69	69	69	69	69	69	69	69	69	69	66	69	69	63	69	68	60	69	64	57	69	62	53	66	59	60
			Exposed	69	69	69	69	69	69	69	69	69	69	69	67	69	69	64	69	69	62	69	69	61	69	64	57	69	61	53	65	58	60	62	54	56	59	61	53	56	59	49
		7-20	Interior	71	71	71	71	71	71	71	71	71	71	71	71	71	71	71	71	71	71	71	71	68	71	68	63	71	64	60	71	61	57	68	58	53	65	55	60	62	52	58
			Exposed	71	71	71	71	71	70	71	71	66	71	69	64	71	66	62	71	64	60	71	62	58	68	59	54	64	54	60	61	51	57	58	58	53	55	55	49	62	52	44
		20-27	Interior	79	79	79	79	79	79	79	79	79	79	79	79	79	79	79	79	79	78	79	79	75	79	74	69	79	69	64	79	65	61	76	62	58	72	60	54	69	57	50
			Exposed	79	79	79	79	79	77	79	79	73	79	75	70	79	72	67	79	69	64	79	66	62	76	62	58	72	59	53	68	56	47	65	52	57	62	60	52	60	57	46
		27-45	Interior	85	85	85	85	85	85	85	85	85	85	85	85	85	85	85	85	85	83	85	85	80	83	82	74	80	76	69	76	72	65	71	68	62	67	64	59	64	62	56
			Exposed	85	85	85	85	85	82	85	85	78	85	83	75	85	79	72	81	76	69	78	73	66	72	68	62	67	64	59	63	61	54	61	58	51	58	55	59	55	52	55
	D	0-7	Interior	72	72	72	72	72	72	72	72	72	72	72	72	72	72	71	72	72	69	72	72	66	72	71	62	72	67	59	72	63	55	68	61	52	64	58	59	62	54	56
			Exposed	72	72	71	72	72	68	72	72	65	72	72	63	72	69	61	72	66	59	72	64	57	68	61	52	64	57	59	61	53	55	58	60	52	55	58	47	52	54	42
		7-20	Interior	74	74	74	74	74	74	74	74	74	74	74	71	74	74	68	74	71	65	74	68	63	74	64	60	70	61	56	67	57	52	63	54	59	61	61	56	59	58	53
			Exposed	74	74	68	74	70	65	74	67	62	74	64	60	73	62	58	70	60	56	68	59	53	64	54	60	61	60	56	57	57	52	54	53	47	61	50	41	58	44	37
		20-27	Interior	81	81	81	81	81	81	81	81	81	81	81	79	81	81	75	81	77	72	81	74	69	81	69	64	79	64	60	75	61	56	71	59	52	67	55	46	65	52	57
			Exposed	81	81	75	81	76	71	81	73	67	81	69	64	81	66	62	79	64	60	76	62	58	71	59	53	67	55	45	64	51	55	61	59	51	58	55	42	55	52	37
		27-45	Interior	87	87	87	87	87	87	87	87	87	87	87	84	87	87	80	87	85	77	85	82	74	81	76	69	75	71	64	70	66	61	66	63	58	63	61	54	61	58	51
			Exposed	87	87	80	87	84	76	86	80	72	82	77	69	78	73	66	75	70	64	72	68	62	66	64	58	63	60	54	60	57	48	56	53	57	53	61	53	49	58	48
50	B	0-7	Interior	63	63	63	63	63	63	63	63	63	63	63	63	63	63	63	63	63	63	63	63	63	63	63	63	63	63	63	63	63	63	63	63	63	63	63	62	63	63	59
			Exposed	63	63	63	63	63	63	63	63	63	63	63	63	63	63	63	63	63	63	63	63	63	63	63	63	63	63	61	63	63	58	63	63	55	63	60	51	63	57	59
		7-20	Interior	65	65	65	65	65	65	65	65	65	65	65	65	65	65	65	65	65	65	65	65	65	65	65	65	65	65	65	65	65	65	65	65	62	65	63	59	65	61	56
			Exposed	65	65	65	65	65	65	65	65	65	65	65	65	65	65	65	65	65	65	65	65	65	65	65	62	65	63	59	65	60	55	65	56	51	63	53	59	61	60	56
		20-27	Interior	73	73	73	73	73	73	73	73	73	73	73	73	73	73	73	73	73	73	73	73	73	73	73	73	73	73	73	73	73	71	73	72	66	73	68	63	73	64	60
			Exposed	73	73	73	73	73	73	73	73	73	73	73	73	73	73	73	73	73	73	73	73	72	73	72	67	73	67	63	73	64	59	73	61	55	70	58	52	67	55	46
		27-45	Interior	79	79	79	79	79	79	79	79	79	79	79	79	79	79	79	79	79	79	79	79	79	79	79	79	79	79	79	78	78	76	76	76	71	74	74	68	72	71	64
			Exposed	79	79	79	79	79	79	79	79	79	79	79	79	79	79	79	79	79	79	79	79	77	79	79	72	79	74	67	74	70	63	69	66	60	65	63	57	63	60	54
	C	0-7	Interior	63	63	63	63	63	63	63	63	63	63	63	63	63	63	63	63	63	63	63	63	63	63	63	63	63	63	63	63	63	60	63	63	57	63	62	53	63	59	60
			Exposed	63	63	63	63	63	63	63	63	63	63	63	63	63	63	63	63	63	62	63	63	61	63	63	57	63	61	53	63	58	60	62	54	56	59	61	53	56	59	49
		7-20	Interior	65	65	65	65	65	65	65	65	65	65	65	65	65	65	65	65	65	65	65	65	65	65	65	63	65	64	60	65	61	57	64	58	53	63	55	60	62	52	58
			Exposed	65	65	65	65	65	65	65	65	65	65	65	64	65	65	62	65	64	60	65	62	58	65	59	54	64	54	60	61	51	57	58	58	53	55	55	49	62	52	44
		20-27	Interior	73	73	73	73	73	73	73	73	73	73	73	73	73	73	73	73	73	73	73	73	73	73	73	69	73	69	64	73	65	61	72	62	58	71	60	54	69	57	50
			Exposed	73	73	73	73	73	73	73	73	73	73	73	70	73	72	67	73	69	64	73	66	62	73	62	58	72	59	53	68	56	47	65	52	57	62	60	52	60	57	46
		27-45	Interior	79	79	79	79	79	79	79	79	79	79	79	79	79	79	79	79	79	79	79	79	79	77	77	74	75	75	69	72	72	65	70	68	62	67	64	59	64	62	56
			Exposed	79	79	79	79	79	79	79	79	78	79	79	75	79	79	72	79	76	69	78	73	66	72	68	62	67	64	59	63	61	54	61	58	51	58	55	59	55	52	55
	D	0-7	Interior	66	66	66	66	66	66	66	66	66	66	66	66	66	66	66	66	66	66	66	66	66	66	66	62	66	66	59	66	63	55	66	61	52	64	58	59	62	54	56
			Exposed	66	66	66	66	66	66	66	66	65	66	66	63	66	66	61	66	66	59	66	64	57	66	61	52	64	57	59	61	53	55	58	60	52	55	58	47	52	54	42
		7-20	Interior	68	68	68	68	68	68	68	68	68	68	68	68	68	68	68	68	68	65	68	68	63	68	64	60	68	61	56	66	57	52	63	54	59	61	61	56	59	58	53
			Exposed	68	68	68	68	68	65	68	67	62	68	64	60	68	62	58	68	60	56	68	59	53	64	54	60	61	60	56	57	57	52	54	53	47	61	50	41	58	44	37
		20-27	Interior	76	76	76	76	76	76	76	76	76	76	76	76	76	76	75	76	76	72	76	74	69	76	69	64	76	64	60	74	61	56	71	59	52	67	55	46	65	52	57
			Exposed	76	76	75	76	76	71	76	73	67	76	69	64	76	66	62	76	64	60	76	62	58	71	59	53	67	55	45	64	51	55	61	59	51	58	55	42	55	52	37
		27-45	Interior	82	82	82	82	82	82	82	82	82	82	82	82	82	82	80	81	81	77	80	80	74	77	76	69	74	71	64	70	66	61	66	63	58	63	61	54	61	58	51
			Exposed	82	82	80	82	82	76	82	80	72	82	77	69	78	73	66	75	70	64	72	68	62	66	64	58	63	60	54	60	57	48	56	53	57	53	61	53	49	58	48

* Cells with an astrisks indicates that the L-foot must be oriented in the Y- direction as indicated in the image.

10 Highlighted cell indicate 3-rail system span. Contact Unirac Engineering Services for support.

~~10~~ Highlighted cell with strikethrough indicate 3-rail system span and module clamp allowable capacity exceeds with 3-rails. 4-Rail system required. Contact Unirac Engineering Services for support.

UNIRAC

ASCE 7-16	II	30 ft	Ss = 1.25	23 sq.ft	LANDSCAPE	CROSS-SLOPE	NXT	NXT COMBO	Stronghold BUTYL Rafter #14S
Design Standard	Risk Category	Roof Height	Seismic	Module Area	Orientation	Rail Direction	Rail Type	Clamp	Attachment

SPAN TABLES

Maximum Allowable Rail Spans for Rooftop Solar Panels Parallel to the Roof Surface (inches)

Ground Snow Load (psf)	Wind Exposure Category	Roof Tilt Angle (deg)	Panel Exposure	Basic Wind Speed (mph)																																						
				90			95			100			105			110			115			120			130			140			150			160			170			180		
				Roof Wind Zone																																						
				1	2	3	1	2	3	1	2	3	1	2	3	1	2	3	1	2	3	1	2	3	1	2	3	1	2	3	1	2	3	1	2	3	1	2	3	1	2	3
60	B	0-7	Interior	57	57	57	57	57	57	57	57	57	57	57	57	57	57	57	57	57	57	57	57	57	57	57	57	57	57	57	57	57	57	57	57	57	57	57	57	57	57	57
			Exposed	57	57	57	57	57	57	57	57	57	57	57	57	57	57	57	57	57	57	57	57	57	57	57	57	57	57	57	57	57	57	57	57	55	57	57	51	57	57	59
		7-20	Interior	60	60	60	60	60	60	60	60	60	60	60	60	60	60	60	60	60	60	60	60	60	60	60	60	60	60	60	60	60	60	60	60	60	60	60	59	60	60	56
			Exposed	60	60	60	60	60	60	60	60	60	60	60	60	60	60	60	60	60	60	60	60	60	60	60	60	60	60	59	60	60	55	60	56	51	60	53	59	60	60	56
		20-27	Interior	69	69	69	69	69	69	69	69	69	69	69	69	69	69	69	69	69	69	69	69	69	69	69	69	69	69	69	69	69	69	69	69	66	69	68	63	69	64	60
			Exposed	69	69	69	69	69	69	69	69	69	69	69	69	69	69	69	69	69	69	69	69	69	69	69	67	69	67	63	69	64	59	69	61	55	69	58	52	67	55	46
		27-45	Interior	75	75	75	75	75	75	75	75	75	75	75	75	75	75	75	75	75	75	75	75	75	75	75	75	75	75	75	73	73	73	72	72	71	70	70	68	68	68	64
			Exposed	75	75	75	75	75	75	75	75	75	75	75	75	75	75	75	75	75	75	75	75	75	75	75	72	75	74	67	73	70	63	69	66	60	65	63	57	63	60	54
	C	0-7	Interior	57	57	57	57	57	57	57	57	57	57	57	57	57	57	57	57	57	57	57	57	57	57	57	57	57	57	57	57	57	57	57	57	57	57	57	53	57	57	60
			Exposed	57	57	57	57	57	57	57	57	57	57	57	57	57	57	57	57	57	57	57	57	57	57	57	53	57	57	60	57	54	56	57	61	53	56	59	49			
		7-20	Interior	60	60	60	60	60	60	60	60	60	60	60	60	60	60	60	60	60	60	60	60	60	60	60	60	60	60	57	60	58	53	59	55	60	58	52	58			
			Exposed	60	60	60	60	60	60	60	60	60	60	60	60	60	60	60	60	60	60	60	60	58	60	59	54	60	54	60	60	51	57	58	58	53	55	55	49	62	52	44
		20-27	Interior	69	69	69	69	69	69	69	69	69	69	69	69	69	69	69	69	69	69	69	69	69	69	69	69	69	69	64	69	65	61	68	62	58	66	60	54	65	57	50
			Exposed	69	69	69	69	69	69	69	69	69	69	69	69	69	67	69	69	64	69	66	62	69	62	58	69	59	53	68	56	47	65	52	57	62	60	52	60	57	46	
		27-45	Interior	75	75	75	75	75	75	75	75	75	75	75	75	75	75	75	75	75	75	75	75	75	73	73	73	71	71	69	68	68	65	66	66	62	64	64	59	63	62	56
			Exposed	75	75	75	75	75	75	75	75	75	75	75	75	75	72	75	75	69	75	73	66	72	68	62	67	64	59	63	61	54	61	58	51	58	55	59	55	52	55	
	D	0-7	Interior	60	60	60	60	60	60	60	60	60	60	60	60	60	60	60	60	60	60	60	60	60	60	60	60	60	60	59	60	60	55	60	60	52	60	58	59	60	54	56
			Exposed	60	60	60	60	60	60	60	60	60	60	60	60	60	60	60	60	59	60	60	57	60	60	52	60	57	59	60	53	55	58	60	52	55	58	47	52	54	42	
		7-20	Interior	63	63	63	63	63	63	63	63	63	63	63	63	63	63	63	63	63	63	63	63	63	63	63	60	63	61	56	62	57	52	61	54	59	60	61	56	59	58	53
			Exposed	63	63	63	63	63	63	63	62	63	63	60	63	62	58	63	60	56	63	59	53	63	54	60	61	60	56	57	57	52	54	53	47	61	50	41	58	44	37	
		20-27	Interior	72	72	72	72	72	72	72	72	72	72	72	72	72	72	72	72	72	72	72	72	69	72	69	64	71	64	60	70	61	56	68	59	52	67	55	46	65	52	57
			Exposed	72	72	72	72	72	71	72	72	67	72	69	64	72	66	62	72	64	60	72	62	58	71	59	53	67	55	45	64	51	55	61	59	51	58	55	42	55	52	37
		27-45	Interior	78	78	78	78	78	78	78	78	78	78	78	78	78	78	78	76	76	76	75	75	74	73	73	69	70	70	64	68	66	61	65	63	58	63	61	54	61	58	51
			Exposed	78	78	78	78	78	76	78	78	72	78	77	69	78	73	66	75	70	64	72	68	62	66	64	58	63	60	54	60	57	48	56	53	57	53	61	53	49	58	48
70	B	0-7	Interior	53	53	53	53	53	53	53	53	53	53	53	53	53	53	53	53	53	53	53	53	53	53	53	53	53	53	53	53	53	53	53	53	53	53	53	53	53	53	53
			Exposed	53	53	53	53	53	53	53	53	53	53	53	53	53	53	53	53	53	53	53	53	53	53	53	53	53	53	53	53	53	53	53	53	53	53	53	51	53	53	59
		7-20	Interior	56	56	56	56	56	56	56	56	56	56	56	56	56	56	56	56	56	56	56	56	56	56	56	56	56	56	56	56	56	56	56	56	56	56	56	56	56	56	56
			Exposed	56	56	56	56	56	56	56	56	56	56	56	56	56	56	56	56	56	56	56	56	56	56	56	56	56	56	56	56	56	55	56	56	51	56	53	59	56	60	56
		20-27	Interior	65	65	65	65	65	65	65	65	65	65	65	65	65	65	65	65	65	65	65	65	65	65	65	65	65	65	65	65	65	65	65	65	65	65	65	63	65	64	60
			Exposed	65	65	65	65	65	65	65	65	65	65	65	65	65	65	65	65	65	65	65	65	65	65	65	65	65	65	63	65	64	59	65	61	55	65	58	52	65	55	46
		27-45	Interior	71	71	71	71	71	71	71	71	71	71	71	71	71	71	71	71	71	71	71	71	71	71	71	71	71	71	71	69	69	69	68	68	68	66	66	66	65	65	64
			Exposed	71	71	71	71	71	71	71	71	71	71	71	71	71	71	71	71	71	71	71	71	71	71	71	71	71	71	67	69	69	63	68	66	60	65	63	57	63	60	54
	C	0-7	Interior	53	53	53	53	53	53	53	53	53	53	53	53	53	53	53	53	53	53	53	53	53	53	53	53	53	53	53	53	53	53	53	53	53	53	53	53	53	53	60
			Exposed	53	53	53	53	53	53	53	53	53	53	53	53	53	53	53	53	53	53	53	53	53	53	53	53	53	53	53	53	53	60	53	53	56	53	61	53	53	59	49
		7-20	Interior	56	56	56	56	56	56	56	56	56	56	56	56	56	56	56	56	56	56	56	56	56	56	56	56	56	56	56	56	56	56	56	56	53	56	55	60	55	52	58
			Exposed	56	56	56	56	56	56	56	56	56	56	56	56	56	56	56	56	56	56	56	56	56	56	56	54	56	54	60	56	51	57	56	58	53	55	55	49	62	52	44
		20-27	Interior	65	65	65	65	65	65	65	65	65	65	65	65	65	65	65	65	65	65	65	65	65	65	65	65	65	65	64	65	65	61	64	62	58	63	60	54	62	57	50
			Exposed	65	65	65	65	65	65	65	65	65	65	65	65	65	65	65	65	64	65	65	62	65	62	58	65	59	53	65	56	47	64	52	57	62	60	52	60	57	46	
		27-45	Interior	71	71	71	71	71	71	71	71	71	71	71	71	71	71	71	71	71	71	71	71	71	69	69	69	67	67	67	65	65	65	64	64	62	62	62	59	60	60	56
			Exposed	71	71	71	71	71	71	71	71	71	71	71	71	71	71	71	71	71	69	71	71	66	69	68	62	67	64	59	63	61	54	61	58	51	58	55	59	55	52	55
	D	0-7	Interior	56	56	56	56	56	56	56	56	56	56	56	56	56	56	56	56	56	56	56	56	56	56	56	56	56	56	56	56	56	55	56	56	52	56	56	59	56	54	56
			Exposed	56	56	56	56	56	56	56	56	56	56	56	56	56	56	56	56	56	56	56	56	56	56	56	52	56	56	59	56	53	55	56	60	52	55	58	47	52	54	42
		7-20	Interior	58	58	58	58	58	58	58	58	58	58	58	58	58	58	58	58	58	58	58	58	58	58	58	58	58	58	56	58	57	52	58	54	59	57	61	56	56	58	53
			Exposed	58	58	58	58	58	58	58	58	58	58	58	58	58	58	58	58	56	58	58	53	58	54	60	58	60	56	57	57	52	54	53	47	61	50	41	58	44	37	
		20-27	Interior	68	68	68	68	68	68	68	68	68	68	68	68	68	68	68	68	68	68	68	68	68	68	68	64	67	64	60	66	61	56	65	59	52	63	55	46	62	52	57
			Exposed	68	68	68	68	68	68	68	67	68	68	64	68	66	62	68	64	60	68	62	58	68	59	53	67	55	45	64	51	55	61	59	51	58	55	42	55	52	37	
		27-45	Interior	74	74	74	74	74	74	74	74	74	74	74	73	73	73	72	72	72	71	71	71	69	69	69	67	67	64	65	65	61	63	63	58	61	61	54	59	58	51	
			Exposed	74	74	74	74	74	74	74	74	72	74	74	69	73	73	66	72	70	64	71	68	62	66	64	58	63	60	54	60	57	48	56	53	57	53	61	53	49	58	48
80	B	0-7	Interior	50	50	50	50	50	50	50	50	50	50	50	50	50	50	50	50	50	50	50	50	50	50	50	50	50	50	50	50	50	50	50	50	50	50	50	50	50	50	50
			Exposed	50	50	50	50	50	50	50	50	50	50	50	50	50	50	50	50	50	50	50	50	50	50	50	50	50	50	50	50	50	50	50	50	50	50	50	50	50	50	59
		7-20	Interior	52	52	52	52	52	52	52	52	52	52	52	52	52	52	52	52	52	52	52	52	52	52	52	52	52	52	52	52	52	52	52	52	52	52	52	52	52	52	52
			Exposed	52	52	52	52	52	52	52	52	52	52	52	52	52	52	52	52	52	52	52	52	52	52	52	52	52	52	52	52	52	52	52	52	51	52	52	59	52	60	56
		20-27	Interior	61	61	61	61	61	61	61	61	61	61	61	61	61	61	61	61	61	61	61	61	61	61	61	61	61	61	61	61	61	61	61	61	61	61	61	61	61	61	60
			Exposed	61	61	61	61	61	61	61	61	61	61	61	61	61	61	61	61	61	61	61	61	61	61	61	61	61	61	61	61	61	59	61	61	55	61	58	52	61	55	46
		27-45	Interior	78*	78*	78*	78*	78*	78*	78*	78*	78*	78*	78*	78*	78*	78*	78*	78*	78*	78*	78*	78*	78*	78*	78*	78*	78*	78*	78*	84*	84*	66	65	65	65	64	64	64	62	62	62
			Exposed	78*	78*	78*	78*	78*	78*	78*	78*	78*	78*	78*	78*	78*	78*	78*	78*	78*	78*	78*	78*	68	78*	78*	68	78*	68	67	66	66	63	65	65	60	64	63	57	62	60	54
	C	0-7	Interior	50	50	50	50	50	50	50	50	50	50	50	50	50	50	50	50	50	50	50	50	50	50	50	50	50	50	50	50	50	50	50	50	50	50	50	50	50	50	60
			Exposed	50	50	50	50	50	50	50	50	50	50	50	50	50	50	50	50	50	50	50	50	50	50	50	50	50	50	50	50	50	60	50	50	56	50	61	53	50	59	49
		7-20	Interior	52	52	52	52	52	52	52	52	52	52	52	52	52	52	52	52	52	52	52	52	52	52	52	52	52	52	52	52	52	52	52	52	52	52	52	60	52	52	58
			Exposed	52	52	52	52	52	52	52	52	52	52	52	52	52	52	52	52	52	52	52	52	52	52	52	52	52	52	60	52	51	57	52	58	53	52	55	49	62	52	44
		20-27	Interior	61	61	61	61	61	61	61	61	61	61	61	61	61	61	61	61	61	61	61	61	61	61	61	61	61	61	61	61	61	61	61	61	58	61	60	54	59	57	50
			Exposed	61	61	61	61	61	61	61	61	61	61	61	61	61	61	61	61	61	61	61	61	61	61	61	58	61	59	53	61	56	47	61	52	57	60	60	52	59	57	46
		27-45	Interior	78*	78*	78*	78*	78*	78*	78*	78*	78*	78*	78*	78*	78*	78*	78*	78*	78*	78*	78*	78*	78*	66	66	66	64	64	64	63	63	63	61	61	61	60	60	59	58	58	56
			Exposed	78*	78*	78*	78*	78*	78*	78*	78*	78*	78*	78*	68	78*	78*	68	78*	68	68	78*	67	66	66	66	62	64	64	59	63	61	54	61	58	51	58	55	59	55	52	55
	D	0-7	Interior	53	53	53	53	53	53	53	53	53	53	53	53	53	53	53	53	53	53	53	53	53	53	53	53	53	53	53	53	53	53	53	53	52	53	53	59	53	53	56
			Exposed	53	53	53	53	53	53	53	53	53	53	53	53	53	53	53	53	53	53	53	53	53	53	53	52	53	53	59	53	53	55	53	60	52	53	58	47	52	54	42
		7-20	Interior	55	55	55	55	55	55	55	55	55	55	55	55	55	55	55	55	55	55	55	55	55	55	55	55	55	55	55	55	55	52	55	54	59	54	61	56	54	58	53
			Exposed	55	55	55	55	55	55	55	55	55	55	55	55	55	55	55	55	55	55	55	53	55	54	60	55	60	56	55	57	52	54	53	47	61	50	41	58	44	37	
		20-27	Interior	64	64	64	64	64	64	64	64	64	64	64	64	64	64	64	64	64	64	64	64	64	64	64	64	64	64	60	63	61	56	62	59	52	61	55	46	60	52	57
			Exposed	64	64	64	64	64	64	64	64	64	64	64	64	64	62	64	64	60	64	62	58	64	59	53	64	55	45	63	51	55	61	59	51	58	55	42	55	52	37	
		27-45	Interior	71	71	71	71	71	71	71	71	71	71	71	70	70	70	69	69	69	68	68	68	66	66	66	64	64	64	63	63	63	61	61	61	58	59	59	54	58	58	51
			Exposed	71	71	71	71	71	71	71	71	71	71	69	70	70	66	69	69	64	68	68	62	66	64	58	63	60	54	60	57	48	56	53	57	53	61	53	49	58	48	

* Cells with an astrisks indicates that the L-foot must be oriented in the Y- direction as indicated in the image.

10 Highlighted cell indicate 3-rail system span. Contact Unirac Engineering Services for support.

~~10~~ Highlighted cell with strikethrough indicate 3-rail system span and module clamp allowable capacity exceeds with 3-rails. 4-Rail system required. Contact Unirac Engineering Services for support.

UNIRAC

ASCE 7-16	II	30 ft	Ss = 1.25	23 sq.ft	LANDSCAPE	CROSS-SLOPE	NXT	NXT COMBO	Stronghold BUTYL Rafter #14S
Design Standard	Risk Category	Roof Height	Seismic	Module Area	Orientation	Rail Direction	Rail Type	Clamp	Attachment

SPAN TABLES

Maximum Allowable Rail Spans for Rooftop Solar Panels Parallel to the Roof Surface (inches)

Ground Snow Load (psf)	Wind Exposure Category	Roof Tilt Angle (deg)	Panel Exposure	Basic Wind Speed (mph)																																						
				90			95			100			105			110			115			120			130			140			150			160			170			180		
				Roof Wind Zone																																						
				1	2	3	1	2	3	1	2	3	1	2	3	1	2	3	1	2	3	1	2	3	1	2	3	1	2	3	1	2	3	1	2	3	1	2	3	1	2	3
90	B	0-7	Interior	47	47	47	47	47	47	47	47	47	47	47	47	47	47	47	47	47	47	47	47	47	47	47	47	47	47	47	47	47	47	47	47	47	47	47	47	47	47	47
			Exposed	47	47	47	47	47	47	47	47	47	47	47	47	47	47	47	47	47	47	47	47	47	47	47	47	47	47	47	47	47	47	47	47	47	47	47	47	47	47	58
		7-20	Interior	49	49	49	49	49	49	49	49	49	49	49	49	49	49	49	49	49	49	49	49	49	49	49	49	49	49	49	49	49	49	49	49	49	49	49	49	49	49	49
			Exposed	49	49	49	49	49	49	49	49	49	49	49	49	49	49	49	49	49	49	49	49	49	49	49	49	49	49	49	49	49	49	49	49	49	49	49	59	49	60	56
		20-27	Interior	57	57	57	57	57	57	57	57	57	57	57	57	57	57	57	57	57	57	57	57	57	57	57	57	57	57	57	57	57	57	57	57	57	57	57	57	57	57	57
			Exposed	57	57	57	57	57	57	57	57	57	57	57	57	57	57	57	57	57	57	57	57	57	57	57	57	57	57	57	57	57	57	57	57	55	57	57	52	57	55	46
		27-45	Interior	72*	72*	72*	72*	72*	72*	72*	72*	72*	72*	72*	72*	72*	72*	72*	72*	72*	72*	72*	72*	72*	72*	72*	72*	71*	71*	71*	70*	70*	70*	72*	72*	72*	73*	73*	61	60	60	60
			Exposed	72*	72*	72*	72*	72*	72*	72*	72*	72*	72*	72*	72*	72*	72*	72*	72*	72*	72*	72*	72*	72*	72*	72*	72*	71*	71*	64	70*	70*	63	62	62	60	61	61	57	60	60	54
	C	0-7	Interior	47	47	47	47	47	47	47	47	47	47	47	47	47	47	47	47	47	47	47	47	47	47	47	47	47	47	47	47	47	47	47	47	47	47	47	47	47	47	58
			Exposed	47	47	47	47	47	47	47	47	47	47	47	47	47	47	47	47	47	47	47	47	47	47	47	47	47	47	47	47	47	58	47	47	56	47	58	53	47	58	49
		7-20	Interior	49	49	49	49	49	49	49	49	49	49	49	49	49	49	49	49	49	49	49	49	49	49	49	49	49	49	49	49	49	49	49	49	49	49	49	60	49	49	58
			Exposed	49	49	49	49	49	49	49	49	49	49	49	49	49	49	49	49	49	49	49	49	49	49	49	49	49	49	60	49	49	57	49	58	53	49	55	49	60	52	44
		20-27	Interior	57	57	57	57	57	57	57	57	57	57	57	57	57	57	57	57	57	57	57	57	57	57	57	57	57	57	57	57	57	57	57	57	57	57	57	54	57	57	50
			Exposed	57	57	57	57	57	57	57	57	57	57	57	57	57	57	57	57	57	57	57	57	57	57	57	53	57	56	47	57	52	57	57	60	52	57	57	46			
		27-45	Interior	72*	72*	72*	72*	72*	72*	72*	72*	72*	72*	72*	72*	72*	72*	72*	72*	72*	72*	71*	71*	71*	69*	69*	69*	71*	71*	62	61	61	61	59	59	59	58	58	58	57	57	56
			Exposed	72*	72*	72*	72*	72*	72*	72*	72*	72*	72*	72*	72*	72*	72*	69*	71*	71*	64	69*	63	62	62	62	59	61	61	54	59	58	51	58	55	59	55	52	55			
	D	0-7	Interior	50	50	50	50	50	50	50	50	50	50	50	50	50	50	50	50	50	50	50	50	50	50	50	50	50	50	50	50	50	50	50	50	50	50	50	59	50	50	56
			Exposed	50	50	50	50	50	50	50	50	50	50	50	50	50	50	50	50	50	50	50	50	50	50	50	50	50	50	59	50	50	55	50	60	52	50	58	47	50	54	42
		7-20	Interior	52	52	52	52	52	52	52	52	52	52	52	52	52	52	52	52	52	52	52	52	52	52	52	52	52	52	52	52	52	52	52	52	59	52	61	56	51	58	53
			Exposed	52	52	52	52	52	52	52	52	52	52	52	52	52	52	52	52	52	52	52	52	52	52	52	60	52	60	56	52	57	52	52	53	47	61	50	41	58	44	37
		20-27	Interior	60	60	60	60	60	60	60	60	60	60	60	60	60	60	60	60	60	60	60	60	60	60	60	60	60	60	60	60	60	56	59	59	52	58	55	46	57	52	57
			Exposed	60	60	60	60	60	60	60	60	60	60	60	60	60	60	60	60	60	60	60	60	58	60	59	53	60	55	45	60	51	55	59	59	51	58	55	42	55	52	37
		27-45	Interior	78*	78*	78*	78*	78*	78*	78*	78*	78*	78*	78*	78*	78*	78*	78*	80*	80*	66	83*	65	65	64	64	64	62	62	62	61	61	61	59	59	58	58	58	54	56	56	51
			Exposed	78*	78*	78*	78*	78*	68	78*	78*	68	78*	68	68	78*	67	66	66	66	64	65	65	62	64	64	58	62	60	54	60	57	48	56	53	57	53	61	53	49	58	48
100	B	0-7	Interior	45	45	45	45	45	45	45	45	45	45	45	45	45	45	45	45	45	45	45	45	45	45	45	45	45	45	45	45	45	45	45	45	45	45	45	45	45	45	45
			Exposed	45	45	45	45	45	45	45	45	45	45	45	45	45	45	45	45	45	45	45	45	45	45	45	45	45	45	45	45	45	45	45	45	45	45	45	45	45	45	55
		7-20	Interior	47	47	47	47	47	47	47	47	47	47	47	47	47	47	47	47	47	47	47	47	47	47	47	47	47	47	47	47	47	47	47	47	47	47	47	47	47	47	47
			Exposed	47	47	47	47	47	47	47	47	47	47	47	47	47	47	47	47	47	47	47	47	47	47	47	47	47	47	47	47	47	47	47	47	47	47	47	57	47	57	56
		20-27	Interior	55	55	55	55	55	55	55	55	55	55	55	55	55	55	55	55	55	55	55	55	55	55	55	55	55	55	55	55	55	55	55	55	55	55	55	55	55	55	55
			Exposed	55	55	55	55	55	55	55	55	55	55	55	55	55	55	55	55	55	55	55	55	55	55	55	55	55	55	55	55	55	55	55	55	55	55	55	52	55	55	46
		27-45	Interior	65*	65*	65*	65*	65*	65*	65*	65*	65*	65*	65*	65*	65*	65*	65*	65*	65*	65*	65*	65*	65*	65*	65*	65*	65*	65*	65*	64*	64*	64*	63*	63*	63*	62*	62*	62*	63*	63*	63*
			Exposed	65*	65*	65*	65*	65*	65*	65*	65*	65*	65*	65*	65*	65*	65*	65*	65*	65*	65*	65*	65*	65*	65*	65*	65*	65*	65*	65*	64*	64*	63*	63*	63*	60	62*	62*	57	63*	58	54
	C	0-7	Interior	45	45	45	45	45	45	45	45	45	45	45	45	45	45	45	45	45	45	45	45	45	45	45	45	45	45	45	45	45	45	45	45	45	45	45	45	45	45	55
			Exposed	45	45	45	45	45	45	45	45	45	45	45	45	45	45	45	45	45	45	45	45	45	45	45	55	45	45	55	45	55	53	45	55	49						
		7-20	Interior	47	47	47	47	47	47	47	47	47	47	47	47	47	47	47	47	47	47	47	47	47	47	47	47	47	47	47	47	47	47	47	47	47	47	47	57	47	47	57
			Exposed	47	47	47	47	47	47	47	47	47	47	47	47	47	47	47	47	47	47	47	47	47	47	47	57	47	47	57	47	57	53	47	55	49	57	52	44			
		20-27	Interior	55	55	55	55	55	55	55	55	55	55	55	55	55	55	55	55	55	55	55	55	55	55	55	55	55	55	55	55	55	55	55	55	55	55	55	54	55	55	50
			Exposed	55	55	55	55	55	55	55	55	55	55	55	55	55	55	55	55	55	55	55	55	55	55	55	53	55	55	47	55	52	57	55	60	52	55	57	46			
		27-45	Interior	65*	65*	65*	65*	65*	65*	65*	65*	65*	65*	65*	65*	65*	65*	65*	65*	65*	65*	65*	65*	65*	64*	64*	64*	62*	62*	62*	64*	64*	64*	64*	64*	57	56	56	56	55	55	55
			Exposed	65*	65*	65*	65*	65*	65*	65*	65*	65*	65*	65*	65*	65*	65*	65*	65*	65*	65*	65*	65*	65*	64*	64*	62*	62*	62*	59	63*	59	54	57	57	51	56	55	59	55	52	55
	D	0-7	Interior	47	47	47	47	47	47	47	47	47	47	47	47	47	47	47	47	47	47	47	47	47	47	47	47	47	47	47	47	47	47	47	47	47	47	47	58	47	47	56
			Exposed	47	47	47	47	47	47	47	47	47	47	47	47	47	47	47	47	47	47	47	47	47	47	47	58	47	47	55	47	58	52	47	58	47	47	54	42			
		7-20	Interior	49	49	49	49	49	49	49	49	49	49	49	49	49	49	49	49	49	49	49	49	49	49	49	49	49	49	49	49	49	49	49	49	59	49	61	56	49	58	53
			Exposed	49	49	49	49	49	49	49	49	49	49	49	49	49	49	49	49	49	49	49	49	49	49	49	60	49	60	56	49	57	52	49	53	47	60	50	41	58	44	37
		20-27	Interior	57	57	57	57	57	57	57	57	57	57	57	57	57	57	57	57	57	57	57	57	57	57	57	57	57	57	57	57	57	56	57	57	52	56	55	46	55	52	57
			Exposed	57	57	57	57	57	57	57	57	57	57	57	57	57	57	57	57	57	57	57	57	57	57	57	53	57	55	45	57	51	55	57	59	51	56	55	42	55	52	37
		27-45	Interior	72*	72*	72*	72*	72*	72*	72*	72*	72*	72*	72*	72*	71*	71*	71*	70*	70*	70*	69*	69*	69*	74*	74*	62	60	60	60	59	59	59	57	57	57	56	56	54	55	55	51
			Exposed	72*	72*	72*	72*	72*	72*	72*	72*	72*	72*	72*	69*	71*	71*	64	70*	70*	64	69*	63	62	62	62	58	60	60	54	59	57	48	56	53	57	53	61	53	49	58	48

* Cells with an astrisks indicates that the L-foot must be oriented in the Y- direction as indicated in the image.

10 Highlighted cell indicate 3-rail system span. Contact Unirac Engineering Services for support.

~~10~~ Highlighted cell with strikethrough indicate 3-rail system span and module clamp allowable capacity exceeds with 3-rails. 4-Rail system required. Contact Unirac Engineering Services for support.

UNIRAC

ASCE 7-16	II	30 ft	Ss = 3.00	19 sq.ft	PORTRAIT	CROSS-SLOPE	NXT	NXT COMBO	Stronghold BUTYL Rafter #14S
Design Standard	Risk Category	Roof Height	Seismic	Module Area	Orientation	Rail Direction	Rail Type	Clamp	Attachment

SPAN TABLES

Maximum Allowable Rail Spans for Rooftop Solar Panels Parallel to the Roof Surface (inches)

Ground Snow Load (psf)	Wind Exposure Category	Roof Tilt Angle (deg)	Panel Exposure	Basic Wind Speed (mph)																																						
				90			95			100			105			110			115			120			130			140			150			160			170			180		
				Roof Wind Zone																																						
				1	2	3	1	2	3	1	2	3	1	2	3	1	2	3	1	2	3	1	2	3	1	2	3	1	2	3	1	2	3	1	2	3	1	2	3	1	2	3
0	B	0-7	Interior	86	86	86	86	86	86	86	86	83	86	86	79	86	86	76	86	83	73	86	80	71	85	75	66	80	71	63	76	67	59	72	64	55	68	61	51	65	58	43
			Exposed	86	86	76	86	82	73	86	79	70	86	76	67	83	73	64	80	70	62	77	68	60	72	64	55	68	60	50	64	56	41	61	52	36	58	46	32	54	40	42
		7-20	Interior	86	86	86	86	86	84	86	86	80	86	83	77	86	80	74	86	77	71	83	74	69	78	69	64	73	65	60	69	61	56	66	58	51	63	53	43	60	48	38
			Exposed	86	79	74	85	76	70	81	73	67	78	70	65	75	67	62	73	65	60	70	62	58	66	58	52	63	53	42	60	45	36	56	38	32	52	34	42	47	30	38
		20-27	Interior	87	87	87	87	87	87	87	87	87	87	87	84	87	86	81	87	82	78	87	79	75	87	74	70	82	70	66	77	66	62	74	62	59	70	59	54	67	56	50
			Exposed	87	85	81	87	81	77	87	78	74	87	75	71	84	72	68	81	69	65	79	67	63	74	63	59	70	59	54	66	54	46	63	49	38	60	41	32	57	36	28
		27-45	Interior	87	87	87	87	87	87	87	87	87	87	87	87	87	87	84	87	87	81	87	86	78	86	80	73	81	75	69	76	71	65	72	68	62	68	64	59	65	62	55
			Exposed	87	87	84	87	87	81	87	84	77	87	81	74	83	78	71	80	75	69	77	73	66	72	68	62	68	64	59	64	61	54	61	57	48	57	53	40	53	47	35
	C	0-7	Interior	86	86	78	86	85	75	86	81	72	86	78	69	85	75	66	82	72	64	79	70	62	74	66	58	70	62	53	66	59	45	63	54	39	60	50	34	57	43	30
			Exposed	85	75	66	81	72	63	78	69	61	75	66	58	72	64	55	70	62	52	67	60	48	63	55	39	60	49	33	55	41	44	51	36	38	43	31	34	38	42	30
		7-20	Interior	86	82	76	86	78	72	84	75	69	80	72	66	77	69	64	75	66	62	72	64	60	68	60	54	64	55	47	61	50	39	58	41	34	54	36	30	51	32	40
			Exposed	77	69	64	74	66	61	71	63	59	69	61	55	66	58	52	64	55	46	62	52	41	58	42	34	54	36	30	48	31	39	41	41	34	36	36	30	32	32	27
		20-27	Interior	87	87	83	87	84	79	87	80	76	87	77	73	87	74	70	84	71	67	81	69	65	76	64	61	72	61	56	68	57	51	65	52	42	62	45	35	59	39	30
			Exposed	87	74	70	83	71	67	80	68	64	77	65	61	74	63	59	71	60	56	69	58	53	65	52	42	61	43	35	58	37	29	54	33	36	50	43	31	44	39	27
		27-45	Interior	87	87	87	87	87	83	87	87	79	87	83	76	86	80	73	83	77	71	80	75	68	74	70	64	70	66	60	66	62	56	62	59	52	59	55	44	56	51	38
			Exposed	86	80	73	82	76	70	78	73	67	75	70	65	72	68	62	69	65	60	67	63	58	63	59	52	59	55	43	54	49	36	48	41	31	40	36	40	36	32	35
	D	0-7	Interior	86	83	73	86	79	70	86	76	67	83	73	64	79	70	62	77	68	60	74	65	57	69	61	52	65	58	43	62	53	37	59	47	32	55	40	43	51	36	38
			Exposed	79	70	62	76	67	59	73	64	56	70	62	53	67	60	48	65	57	42	63	54	39	59	48	33	54	39	42	49	34	37	41	30	32	36	40	28	32	35	25
		7-20	Interior	85	76	71	81	73	67	78	70	65	75	67	62	72	64	60	70	62	57	68	60	54	64	55	45	60	48	38	57	40	33	53	35	43	47	30	38	41	41	34
			Exposed	72	64	60	69	61	56	67	59	52	64	55	47	62	52	41	60	47	37	58	41	34	53	35	44	46	30	37	40	39	33	35	34	28	30	30	25	41	27	22
		20-27	Interior	87	82	77	87	78	74	87	75	71	84	72	68	81	69	65	78	66	63	76	64	60	71	60	55	67	56	50	64	51	39	61	42	33	58	37	28	54	33	37
			Exposed	81	69	65	77	66	62	74	63	59	72	61	56	69	58	53	67	55	49	65	52	42	61	42	34	57	36	28	53	31	35	47	41	29	41	37	25	36	32	22
		27-45	Interior	87	87	81	87	84	77	87	81	74	83	78	71	80	75	68	77	72	66	74	70	64	69	65	60	65	62	55	61	58	51	58	54	41	54	48	36	48	41	31
			Exposed	80	75	68	76	71	65	73	68	63	70	66	60	67	63	58	65	61	55	62	59	52	59	54	42	53	47	35	45	39	29	38	34	38	34	30	33	30	41	28
10	B	0-7	Interior	72	72	72	72	72	72	72	72	72	72	72	72	72	72	72	72	72	72	72	72	71	72	72	66	72	71	63	72	67	59	72	64	55	68	61	51	65	58	43
			Exposed	72	72	72	72	72	72	72	72	70	72	72	67	72	72	64	72	70	62	72	68	60	72	64	55	68	60	50	64	56	41	61	52	36	58	46	32	54	40	42
		7-20	Interior	72	72	72	72	72	72	72	72	72	72	72	72	72	72	72	72	72	71	72	72	69	72	69	64	72	65	60	69	61	56	66	58	51	63	53	43	60	48	38
			Exposed	72	72	72	72	72	70	72	72	67	72	70	65	72	67	62	72	65	60	70	62	58	66	58	52	63	53	42	60	45	36	56	38	32	52	34	42	47	30	38
		20-27	Interior	83	83	83	83	83	83	83	83	83	83	83	83	83	83	81	83	82	78	83	79	75	83	74	70	82	70	66	77	66	62	74	62	59	70	59	54	67	56	50
			Exposed	83	83	81	83	81	77	83	78	74	83	75	71	83	72	68	81	69	65	79	67	63	74	63	59	70	59	54	66	54	46	63	49	38	60	41	32	57	36	28
		27-45	Interior	86	86	86	86	86	86	86	86	86	86	86	86	86	86	84	86	86	81	86	86	78	86	80	73	81	75	69	76	71	65	72	68	62	68	64	59	65	62	55
			Exposed	86	86	84	86	86	81	86	84	77	86	81	74	83	78	71	80	75	69	77	73	66	72	68	62	68	64	59	64	61	54	61	57	48	57	53	40	53	47	35
	C	0-7	Interior	72	72	72	72	72	72	72	72	72	72	72	69	72	72	66	72	72	64	72	70	62	72	66	58	70	62	53	66	59	45	63	54	39	60	50	34	57	43	30
			Exposed	72	72	66	72	72	63	72	69	61	72	66	58	72	64	55	70	62	52	67	60	48	63	55	39	60	49	33	55	41	44	51	36	38	43	31	34	38	42	30
		7-20	Interior	72	72	72	72	72	72	72	72	69	72	72	66	72	69	64	72	66	62	72	64	60	68	60	54	64	55	47	61	50	39	58	41	34	54	36	30	51	32	40
			Exposed	72	69	64	72	66	61	71	63	59	69	61	55	66	58	52	64	55	46	62	52	41	58	42	34	54	36	30	48	31	39	41	41	34	36	36	30	32	32	27
		20-27	Interior	83	83	83	83	83	79	83	80	76	83	77	73	83	74	70	83	71	67	81	69	65	76	64	61	72	61	56	68	57	51	65	52	42	62	45	35	59	39	30
			Exposed	83	74	70	83	71	67	80	68	64	77	65	61	74	63	59	71	60	56	69	58	53	65	52	42	61	43	35	58	37	29	54	33	36	50	43	31	44	39	27
		27-45	Interior	86	86	86	86	86	83	86	86	79	86	83	76	86	80	73	83	77	71	80	75	68	74	70	64	70	66	60	66	62	56	62	59	52	59	55	44	56	51	38
			Exposed	86	80	73	82	76	70	78	73	67	75	70	65	72	68	62	69	65	60	67	63	58	63	59	52	59	55	43	54	49	36	48	41	31	40	36	40	36	32	35
	D	0-7	Interior	72	72	72	72	72	70	72	72	67	72	72	64	72	70	62	72	68	60	72	65	57	69	61	52	65	58	43	62	53	37	59	47	32	55	40	43	51	36	38
			Exposed	72	70	62	72	67	59	72	64	56	70	62	53	67	60	48	65	57	42	63	54	39	59	48	33	54	39	42	49	34	37	41	30	32	36	40	28	32	35	25
		7-20	Interior	72	72	71	72	72	67	72	70	65	72	67	62	72	64	60	70	62	57	68	60	54	64	55	45	60	48	38	57	40	33	53	35	43	47	30	38	41	41	34
			Exposed	72	64	60	69	61	56	67	59	52	64	55	47	62	52	41	60	47	37	58	41	34	53	35	44	46	30	37	40	39	33	35	34	28	30	30	25	41	27	22
		20-27	Interior	84	82	77	84	78	74	84	75	71	84	72	68	81	69	65	78	66	63	76	64	60	71	60	55	67	56	50	64	51	39	61	42	33	58	37	28	54	33	37
			Exposed	81	69	65	77	66	62	74	63	59	72	61	56	69	58	53	67	55	49	65	52	42	61	42	34	57	36	28	53	31	35	47	41	29	41	37	25	36	32	22
		27-45	Interior	87	87	81	87	84	77	87	81	74	83	78	71	80	75	68	77	72	66	74	70	64	69	65	60	65	62	55	61	58	51	58	54	41	54	48	36	48	41	31
			Exposed	80	75	68	76	71	65	73	68	63	70	66	60	67	63	58	65	61	55	62	59	52	59	54	42	53	47	35	45	39	29	38	34	38	34	30	33	30	41	28
20	B	0-7	Interior	60	60	60	60	60	60	60	60	60	60	60	60	60	60	60	60	60	60	60	60	60	60	60	60	60	60	60	60	60	59	60	60	55	60	60	51	60	58	43
			Exposed	60	60	60	60	60	60	60	60	60	60	60	60	60	60	60	60	60	60	60	60	60	60	60	55	60	60	50	60	56	41	60	52	36	58	46	32	54	40	42
		7-20	Interior	61	61	61	61	61	61	61	61	61	61	61	61	61	61	61	61	61	61	61	61	61	61	61	61	61	61	60	61	61	56	61	58	51	61	53	43	60	48	38
			Exposed	61	61	61	61	61	61	61	61	61	61	61	61	61	61	61	61	61	60	61	61	58	61	58	52	61	53	42	60	45	36	56	38	32	52	34	42	47	30	38
		20-27	Interior	74	74	74	74	74	74	74	74	74	74	74	74	74	74	74	74	74	74	74	74	74	74	74	70	74	70	66	74	66	62	74	62	59	70	59	54	67	56	50
			Exposed	74	74	74	74	74	74	74	74	74	74	74	71	74	72	68	74	69	65	74	67	63	74	63	59	70	59	54	66	54	46	63	49	38	60	41	32	57	36	28
		27-45	Interior	78	78	78	78	78	78	78	78	78	78	78	78	78	78	78	78	78	78	78	78	78	78	78	73	78	75	69	76	71	65	72	68	62	68	64	59	65	62	55
			Exposed	78	78	78	78	78	78	78	78	77	78	78	74	78	78	71	78	75	69	77	73	66	72	68	62	68	64	59	64	61	54	61	57	48	57	53	40	53	47	35
	C	0-7	Interior	60	60	60	60	60	60	60	60	60	60	60	60	60	60	60	60	60	60	60	60	60	60	60	58	60	60	53	60	59	45	60	54	39	60	50	34	57	43	30
			Exposed	60	60	60	60	60	60	60	60	60	60	60	58	60	60	55	60	60	52	60	60	48	60	55	39	60	49	33	55	41	44	51	36	38	43	31	34	38	42	30
		7-20	Interior	61	61	61	61	61	61	61	61	61	61	61	61	61	61	61	61	61	61	61	61	60	61	60	54	61	55	47	61	50	39	58	41	34	54	36	30	51	32	40
			Exposed	61	61	61	61	61	61	61	61	59	61	61	55	61	58	52	61	55	46	61	52	41	58	42	34	54	36	30	48	31	39	41	41	34	36	36	30	32	32	27
		20-27	Interior	74	74	74	74	74	74	74	74	74	74	74	73	74	74	70	74	71	67	74	69	65	74	64	61	72	61	56	68	57	51	65	52	42	62	45	35	59	39	30
			Exposed	74	74	70	74	71	67	74	68	64	74	65	61	74	63	59	71	60	56	69	58	53	65	52	42	61	43	35	58	37	29	54	33	36	50	43	31	44	39	27
		27-45	Interior	78	78	78	78	78	78	78	78	78	78	78	76	78	78	73	78	77	71	78	75	68	74	70	64	70	66	60	66	62	56	62	59	52	59	55	44	56	51	38
			Exposed	78	78	73	78	76	70	78	73	67	75	70	65	72	68	62	69	65	60	67	63	58	63	59	52	59	55	43	54	49	36	48	41	31	40	36	40	36	32	35
	D	0-7	Interior	60	60	60	60	60	60	60	60	60	60	60	60	60	60	60	60	60	60	60	60	57	60	60	52	60	58	43	60	53	37	59	47	32	55	40	43	51	36	38
			Exposed	60	60	60	60	60	59	60	60	56	60	60	53	60	60	48	60	57	42	60	54	39	59	48	33	54	39	42	49	34	37	41	30	32	36	40	28	32	35	25
		7-20	Interior	61	61	61	61	61	61	61	61	61	61	61	61	61	61	60	61	61	57	61	60	54	61	55	45	60	48	38	57	40	33	53	35	43	47	30	38	41	41	34
			Exposed	61	61	60	61	61	56	61	59	52	61	55	47	61	52	41	60	47	37	58	41	34	53	35	44	46	30	37	40	39	33	35	34	28	30	30	25	41	27	22
		20-27	Interior	75	75	75	75	75	74	75	75	71	75	72	68	75	69	65	75	66	63	75	64	60	71	60	55	67	56	50	64	51	39	61	42	33	58	37	28	54	33	37
			Exposed	75	69	65	75	66	62	74	63	59	72	61	56	69	58	53	67	55	49	65	52	42	61	42	34	57	36	28	53	31	35	47	41	29	41	37	25	36	32	22
		27-45	Interior	79	79	79	79	79	77	79	79	74	79	78	71	79	75	68	77	72	66	74	70	64	69	65	60	65	62	55	61	58	51	58	54	41	54	48	36	48	41	31
			Exposed	79	75	68	76	71	65	73	68	63	70	66	60	67	63	58	65	61	55	62	59	52	59	54	42	53	47	35	45	39	29	38	34	38	34	30	33	30	41	28

* Cells with an astrisks indicates that the L-foot must be oriented in the Y- direction as indicated in the image.

10 Highlighted cell indicate 3-rail system span. Contact Unirac Engineering Services for support.

~~10~~ Highlighted cell with strikethrough indicate 3-rail system span and module clamp allowable capacity exceeds with 3-rails. 4-Rail system required. Contact Unirac Engineering Services for support.

UNIRAC

ASCE 7-16	II	30 ft	Ss = 3.00	19 sq.ft	PORTRAIT	CROSS-SLOPE	NXT	NXT COMBO	Stronghold BUTYL Rafter #14S
Design Standard	Risk Category	Roof Height	Seismic	Module Area	Orientation	Rail Direction	Rail Type	Clamp	Attachment

SPAN TABLES

Maximum Allowable Rail Spans for Rooftop Solar Panels Parallel to the Roof Surface (inches)

Ground Snow Load (psf)	Wind Exposure Category	Roof Tilt Angle (deg)	Panel Exposure	Basic Wind Speed (mph)																																								
				90			95			100			105			110			115			120			130			140			150			160			170			180		
				Roof Wind Zone																																								
				1	2	3	1	2	3	1	2	3	1	2	3	1	2	3	1	2	3	1	2	3	1	2	3	1	2	3	1	2	3	1	2	3	1	2	3	1	2	3
30	B	0-7	Interior	59	59	59	59	59	59	59	59	59	59	59	59	59	59	59	59	59	59	59	59	59	59	59	59	59	59	59	59	59	59	59	59	55	59	59	51	59	58	43
			Exposed	59	59	59	59	59	59	59	59	59	59	59	59	59	59	59	59	59	59	59	59	59	59	59	55	59	59	50	59	56	41	59	52	36	58	46	32	54	40	42
		7-20	Interior	61	61	61	61	61	61	61	61	61	61	61	61	61	61	61	61	61	61	61	61	61	61	61	61	61	61	60	61	61	56	61	58	51	61	53	43	60	48	38
			Exposed	61	61	61	61	61	61	61	61	61	61	61	61	61	61	61	61	61	60	61	61	58	61	58	52	61	53	42	60	45	36	56	38	32	52	34	42	47	30	38
		20-27	Interior	67	67	67	67	67	67	67	67	67	67	67	67	67	67	67	67	67	67	67	67	67	67	67	67	67	67	66	67	66	62	67	62	59	67	59	54	67	56	50
			Exposed	67	67	67	67	67	67	67	67	67	67	67	67	67	67	67	67	67	65	67	67	63	67	63	59	67	59	54	66	54	46	63	49	38	60	41	32	57	36	28
		27-45	Interior	71	71	71	71	71	71	71	71	71	71	71	71	71	71	71	71	71	71	71	71	71	71	71	71	71	71	69	70	70	65	68	68	62	66	64	59	64	62	55
			Exposed	71	71	71	71	71	71	71	71	71	71	71	71	71	71	71	71	71	69	71	71	66	71	68	62	68	64	59	64	61	54	61	57	48	57	53	40	53	47	35
	C	0-7	Interior	59	59	59	59	59	59	59	59	59	59	59	59	59	59	59	59	59	59	59	59	59	59	59	58	59	59	53	59	59	45	59	54	39	59	50	34	57	43	30
			Exposed	59	59	59	59	59	59	59	59	59	59	59	58	59	59	55	59	59	52	59	59	48	59	55	39	59	49	33	55	41	44	51	36	38	43	31	34	38	42	30
		7-20	Interior	61	61	61	61	61	61	61	61	61	61	61	61	61	61	61	61	61	61	61	61	60	61	60	54	61	55	47	61	50	39	58	41	34	54	36	30	51	32	40
			Exposed	61	61	61	61	61	61	61	61	59	61	61	55	61	58	52	61	55	46	61	52	41	58	42	34	54	36	30	48	31	39	41	41	34	36	36	30	32	32	27
		20-27	Interior	67	67	67	67	67	67	67	67	67	67	67	67	67	67	67	67	67	67	67	67	65	67	64	61	67	61	56	67	57	51	65	52	42	62	45	35	59	39	30
			Exposed	67	67	67	67	67	67	67	67	64	67	65	61	67	63	59	67	60	56	67	58	53	65	52	42	61	43	35	58	37	29	54	33	36	50	43	31	44	39	27
		27-45	Interior	71	71	71	71	71	71	71	71	71	71	71	71	71	71	71	71	71	71	71	71	68	70	70	64	67	66	60	65	62	56	62	59	52	59	55	44	56	51	38
			Exposed	71	71	71	71	71	70	71	71	67	71	70	65	71	68	62	69	65	60	67	63	58	63	59	52	59	55	43	54	49	36	48	41	31	40	36	40	36	32	35
	D	0-7	Interior	60	60	60	60	60	60	60	60	60	60	60	60	60	60	60	60	60	60	60	60	57	60	60	52	60	58	43	60	53	37	59	47	32	55	40	43	51	36	38
			Exposed	60	60	60	60	60	59	60	60	56	60	60	53	60	60	48	60	57	42	60	54	39	59	48	33	54	39	42	49	34	37	41	30	32	36	40	28	32	35	25
		7-20	Interior	61	61	61	61	61	61	61	61	61	61	61	61	61	61	60	61	61	57	61	60	54	61	55	45	60	48	38	57	40	33	53	35	43	47	30	38	41	41	34
			Exposed	61	61	60	61	61	56	61	59	52	61	55	47	61	52	41	60	47	37	58	41	34	53	35	44	46	30	37	40	39	33	35	34	28	30	30	25	41	27	22
		20-27	Interior	69	69	69	69	69	69	69	69	69	69	69	68	69	69	65	69	66	63	69	64	60	69	60	55	67	56	50	64	51	39	61	42	33	58	37	28	54	33	37
			Exposed	69	69	65	69	66	62	69	63	59	69	61	56	69	58	53	67	55	49	65	52	42	61	42	34	57	36	28	53	31	35	47	41	29	41	37	25	36	32	22
		27-45	Interior	73	73	73	73	73	73	73	73	73	73	73	71	73	73	68	73	72	66	71	70	64	68	65	60	65	62	55	61	58	51	58	54	41	54	48	36	48	41	31
			Exposed	73	73	68	73	71	65	73	68	63	70	66	60	67	63	58	65	61	55	62	59	52	59	54	42	53	47	35	45	39	29	38	34	38	34	30	33	30	41	28
40	B	0-7	Interior	54	54	54	54	54	54	54	54	54	54	54	54	54	54	54	54	54	54	54	54	54	54	54	54	54	54	54	54	54	54	54	54	54	54	54	51	54	54	43
			Exposed	54	54	54	54	54	54	54	54	54	54	54	54	54	54	54	54	54	54	54	54	54	54	54	54	54	54	50	54	54	41	54	52	36	54	46	32	54	40	42
		7-20	Interior	56	56	56	56	56	56	56	56	56	56	56	56	56	56	56	56	56	56	56	56	56	56	56	56	56	56	56	56	56	56	56	56	51	56	53	43	56	48	38
			Exposed	56	56	56	56	56	56	56	56	56	56	56	56	56	56	56	56	56	56	56	56	56	56	56	52	56	53	42	56	45	36	56	38	32	52	34	42	47	30	38
		20-27	Interior	62	62	62	62	62	62	62	62	62	62	62	62	62	62	62	62	62	62	62	62	62	62	62	62	62	62	62	62	62	62	62	62	59	62	59	54	62	56	50
			Exposed	62	62	62	62	62	62	62	62	62	62	62	62	62	62	62	62	62	62	62	62	62	62	62	59	62	59	54	62	54	46	62	49	38	60	41	32	57	36	28
		27-45	Interior	66	66	66	66	66	66	66	66	66	66	66	66	66	66	66	66	66	66	66	66	66	66	66	66	66	66	66	65	65	65	63	63	62	62	62	59	60	60	55
			Exposed	66	66	66	66	66	66	66	66	66	66	66	66	66	66	66	66	66	66	66	66	66	66	66	62	66	64	59	64	61	54	61	57	48	57	53	40	53	47	35
	C	0-7	Interior	54	54	54	54	54	54	54	54	54	54	54	54	54	54	54	54	54	54	54	54	54	54	54	54	54	54	53	54	54	45	54	54	39	54	50	34	54	43	30
			Exposed	54	54	54	54	54	54	54	54	54	54	54	54	54	54	54	54	54	52	54	54	48	54	54	39	54	49	33	54	41	44	51	36	38	43	31	34	38	42	30
		7-20	Interior	56	56	56	56	56	56	56	56	56	56	56	56	56	56	56	56	56	56	56	56	56	56	56	54	56	55	47	56	50	39	55	41	34	54	36	30	51	32	40
			Exposed	56	56	56	56	56	56	56	56	56	56	56	55	56	56	52	56	55	46	56	52	41	56	42	34	54	36	30	48	31	39	41	41	34	36	36	30	32	32	27
		20-27	Interior	62	62	62	62	62	62	62	62	62	62	62	62	62	62	62	62	62	62	62	62	62	62	62	61	62	61	56	62	57	51	61	52	42	60	45	35	58	39	30
			Exposed	62	62	62	62	62	62	62	62	62	62	62	61	62	62	59	62	60	56	62	58	53	62	52	42	61	43	35	58	37	29	54	33	36	50	43	31	44	39	27
		27-45	Interior	66	66	66	66	66	66	66	66	66	66	66	66	66	66	66	66	66	66	66	66	66	65	65	64	62	62	60	60	60	56	58	58	52	56	55	44	54	51	38
			Exposed	66	66	66	66	66	66	66	66	66	66	66	65	66	66	62	66	65	60	66	63	58	63	59	52	59	55	43	54	49	36	48	41	31	40	36	40	36	32	35
	D	0-7	Interior	56	56	56	56	56	56	56	56	56	56	56	56	56	56	56	56	56	56	56	56	56	56	56	52	56	56	43	56	53	37	56	47	32	55	40	43	51	36	38
			Exposed	56	56	56	56	56	56	56	56	56	56	56	53	56	56	48	56	56	42	56	54	39	56	48	33	54	39	42	49	34	37	41	30	32	36	40	28	32	35	25
		7-20	Interior	58	58	58	58	58	58	58	58	58	58	58	58	58	58	58	58	58	57	58	58	54	58	55	45	58	48	38	57	40	33	53	35	43	47	30	38	41	41	34
			Exposed	58	58	58	58	58	56	58	58	52	58	55	47	58	52	41	58	47	37	58	41	34	53	35	44	46	30	37	40	39	33	35	34	28	30	30	25	41	27	22
		20-27	Interior	64	64	64	64	64	64	64	64	64	64	64	64	64	64	64	64	64	63	64	64	60	64	60	55	64	56	50	63	51	39	61	42	33	58	37	28	54	33	37
			Exposed	64	64	64	64	64	62	64	63	59	64	61	56	64	58	53	64	55	49	64	52	42	61	42	34	57	36	28	53	31	35	47	41	29	41	37	25	36	32	22
		27-45	Interior	68	68	68	68	68	68	68	68	68	68	68	68	68	68	68	67	67	66	66	66	64	64	64	60	61	61	55	59	58	51	57	54	41	54	48	36	48	41	31
			Exposed	68	68	68	68	68	65	68	68	63	68	66	60	67	63	58	65	61	55	62	59	52	59	54	42	53	47	35	45	39	29	38	34	38	34	30	33	30	41	28
50	B	0-7	Interior	49	49	49	49	49	49	49	49	49	49	49	49	49	49	49	49	49	49	49	49	49	49	49	49	49	49	49	49	49	49	49	49	49	49	49	49	49	49	43
			Exposed	49	49	49	49	49	49	49	49	49	49	49	49	49	49	49	49	49	49	49	49	49	49	49	49	49	49	49	49	49	41	49	49	36	49	46	32	49	40	42
		7-20	Interior	51	51	51	51	51	51	51	51	51	51	51	51	51	51	51	51	51	51	51	51	51	51	51	51	51	51	51	51	51	51	51	51	51	51	51	43	51	48	38
			Exposed	51	51	51	51	51	51	51	51	51	51	51	51	51	51	51	51	51	51	51	51	51	51	51	51	51	51	42	51	45	36	51	38	32	51	34	42	47	30	38
		20-27	Interior	57	57	57	57	57	57	57	57	57	57	57	57	57	57	57	57	57	57	57	57	57	57	57	57	57	57	57	57	57	57	57	57	57	57	57	54	57	56	50
			Exposed	57	57	57	57	57	57	57	57	57	57	57	57	57	57	57	57	57	57	57	57	57	57	57	57	57	57	54	57	54	46	57	49	38	57	41	32	57	36	28
		27-45	Interior	62	62	62	62	62	62	62	62	62	62	62	62	62	62	62	62	62	62	62	62	62	62	62	62	62	62	62	61	61	61	60	60	60	58	58	58	57	57	55
			Exposed	62	62	62	62	62	62	62	62	62	62	62	62	62	62	62	62	62	62	62	62	62	62	62	62	62	62	59	61	61	54	60	57	48	57	53	40	53	47	35
	C	0-7	Interior	49	49	49	49	49	49	49	49	49	49	49	49	49	49	49	49	49	49	49	49	49	49	49	49	49	49	49	49	49	45	49	49	39	49	49	34	49	43	30
			Exposed	49	49	49	49	49	49	49	49	49	49	49	49	49	49	49	49	49	49	49	49	48	49	49	39	49	49	33	49	41	44	49	36	38	43	31	34	38	42	30
		7-20	Interior	51	51	51	51	51	51	51	51	51	51	51	51	51	51	51	51	51	51	51	51	51	51	51	51	51	51	47	51	50	39	51	41	34	50	36	30	49	32	40
			Exposed	51	51	51	51	51	51	51	51	51	51	51	51	51	51	51	51	51	46	51	51	41	51	42	34	51	36	30	48	31	39	41	41	34	36	36	30	32	32	27
		20-27	Interior	57	57	57	57	57	57	57	57	57	57	57	57	57	57	57	57	57	57	57	57	57	57	57	57	57	57	56	57	57	51	57	52	42	56	45	35	55	39	30
			Exposed	57	57	57	57	57	57	57	57	57	57	57	57	57	57	57	57	57	56	57	57	53	57	52	42	57	43	35	57	37	29	54	33	36	50	43	31	44	39	27
		27-45	Interior	62	62	62	62	62	62	62	62	62	62	62	62	62	62	62	62	62	62	62	62	62	60	60	60	59	59	59	57	57	56	55	55	52	54	54	44	52	51	38
			Exposed	62	62	62	62	62	62	62	62	62	62	62	62	62	62	62	62	62	60	62	62	58	60	59	52	59	55	43	54	49	36	48	41	31	40	36	40	36	32	35
	D	0-7	Interior	51	51	51	51	51	51	51	51	51	51	51	51	51	51	51	51	51	51	51	51	51	51	51	51	51	51	43	51	51	37	51	47	32	51	40	43	51	36	38
			Exposed	51	51	51	51	51	51	51	51	51	51	51	51	51	51	48	51	51	42	51	51	39	51	48	33	51	39	42	49	34	37	41	30	32	36	40	28	32	35	25
		7-20	Interior	53	53	53	53	53	53	53	53	53	53	53	53	53	53	53	53	53	53	53	53	53	53	53	45	53	48	38	52	40	33	51	35	43	47	30	38	41	41	34
			Exposed	53	53	53	53	53	53	53	53	52	53	53	47	53	52	41	53	47	37	53	41	34	53	35	44	46	30	37	40	39	33	35	34	28	30	30	25	41	27	22
		20-27	Interior	59	59	59	59	59	59	59	59	59	59	59	59	59	59	59	59	59	59	59	59	59	59	59	55	59	56	50	58	51	39	57	42	33	56	37	28	54	33	37
			Exposed	59	59	59	59	59	59	59	59	59	59	59	56	59	58	53	59	55	49	59	52	42	59	42	34	57	36	28	53	31	35	47	41	29	41	37	25	36	32	22
		27-45	Interior	64	64	64	64	64	64	64	64	64	64	64	64	64	64	64	63	63	63	62	62	62	60	60	60	58	58	55	56	56	51	54	54	41	52	48	36	48	41	31
			Exposed	64	64	64	64	64	64	64	64	63	64	64	60	64	63	58	63	61	55	62	59	52	59	54	42	53	47	35	45	39	29	38	34	38	34	30	33	30	41	28

* Cells with an astrisks indicates that the L-foot must be oriented in the Y- direction as indicated in the image.

10 Highlighted cell indicate 3-rail system span. Contact Unirac Engineering Services for support.

~~10~~ Highlighted cell with strikethrough indicate 3-rail system span and module clamp allowable capacity exceeds with 3-rails. 4-Rail system required. Contact Unirac Engineering Services for support.

UNIRAC

ASCE 7-16	II	30 ft	Ss = 3.00	19 sq.ft	PORTRAIT	CROSS-SLOPE	NXT	NXT COMBO	Stronghold BUTYL Rafter #14S
Design Standard	Risk Category	Roof Height	Seismic	Module Area	Orientation	Rail Direction	Rail Type	Clamp	Attachment

SPAN TABLES

Maximum Allowable Rail Spans for Rooftop Solar Panels Parallel to the Roof Surface (inches)

Ground Snow Load (psf)	Wind Exposure Category	Roof Tilt Angle (deg)	Panel Exposure	Basic Wind Speed (mph)																																						
				90			95			100			105			110			115			120			130			140			150			160			170			180		
				Roof Wind Zone																																						
				1	2	3	1	2	3	1	2	3	1	2	3	1	2	3	1	2	3	1	2	3	1	2	3	1	2	3	1	2	3	1	2	3	1	2	3	1	2	3
60	B	0-7	Interior	45	45	45	45	45	45	45	45	45	45	45	45	45	45	45	45	45	45	45	45	45	45	45	45	45	45	45	45	45	45	45	45	45	45	45	45	45	45	43
			Exposed	45	45	45	45	45	45	45	45	45	45	45	45	45	45	45	45	45	45	45	45	45	45	45	45	45	45	45	45	45	41	45	45	36	45	45	32	45	40	42
		7-20	Interior	47	47	47	47	47	47	47	47	47	47	47	47	47	47	47	47	47	47	47	47	47	47	47	47	47	47	47	47	47	47	47	47	47	47	47	43	47	47	38
			Exposed	47	47	47	47	47	47	47	47	47	47	47	47	47	47	47	47	47	47	47	47	47	47	47	47	47	47	42	47	45	36	47	38	32	47	34	42	47	30	38
		20-27	Interior	54	54	54	54	54	54	54	54	54	54	54	54	54	54	54	54	54	54	54	54	54	54	54	54	54	54	54	54	54	54	54	54	54	54	54	54	54	54	50
			Exposed	54	54	54	54	54	54	54	54	54	54	54	54	54	54	54	54	54	54	54	54	54	54	54	54	54	54	54	54	54	46	54	49	38	54	41	32	54	36	28
		27-45	Interior	61*	61*	61*	61*	61*	61*	61*	61*	61*	61*	61*	61*	61*	61*	61*	61*	61*	61*	61*	61*	61*	61*	61*	61*	61*	61*	61*	63*	63*	63*	61*	61*	61*	62*	62*	55	54	54	54
			Exposed	61*	61*	61*	61*	61*	61*	61*	61*	61*	61*	61*	61*	61*	61*	61*	61*	61*	61*	61*	61*	61*	61*	61*	61*	61*	61*	59	63*	61*	54	61*	56	48	55	53	40	53	47	35
	C	0-7	Interior	45	45	45	45	45	45	45	45	45	45	45	45	45	45	45	45	45	45	45	45	45	45	45	45	45	45	45	45	45	45	45	45	39	45	45	34	45	43	30
			Exposed	45	45	45	45	45	45	45	45	45	45	45	45	45	45	45	45	45	45	45	45	45	45	45	39	45	45	33	45	41	44	45	36	38	43	31	34	38	42	30
		7-20	Interior	47	47	47	47	47	47	47	47	47	47	47	47	47	47	47	47	47	47	47	47	47	47	47	47	47	47	47	47	47	39	47	41	34	47	36	30	46	32	40
			Exposed	47	47	47	47	47	47	47	47	47	47	47	47	47	47	47	47	47	46	47	47	41	47	42	34	47	36	30	47	31	39	41	41	34	36	36	30	32	32	27
		20-27	Interior	54	54	54	54	54	54	54	54	54	54	54	54	54	54	54	54	54	54	54	54	54	54	54	54	54	54	54	54	54	51	53	52	42	52	45	35	51	39	30
			Exposed	54	54	54	54	54	54	54	54	54	54	54	54	54	54	54	54	54	54	54	54	53	54	52	42	54	43	35	54	37	29	53	33	36	50	43	31	44	39	27
		27-45	Interior	61*	61*	61*	61*	61*	61*	61*	61*	61*	61*	61*	61*	61*	61*	61*	61*	61*	61*	61*	61*	61*	62*	62*	62*	63*	63*	56	54	54	54	53	53	52	51	51	44	50	50	38
			Exposed	61*	61*	61*	61*	61*	61*	61*	61*	61*	61*	61*	61*	61*	61*	61*	61*	61*	59	61*	61*	58	62*	57	52	56	55	43	54	49	36	48	41	31	40	36	40	36	32	35
	D	0-7	Interior	47	47	47	47	47	47	47	47	47	47	47	47	47	47	47	47	47	47	47	47	47	47	47	47	47	47	47	47	47	37	47	47	32	47	40	43	47	36	38
			Exposed	47	47	47	47	47	47	47	47	47	47	47	47	47	47	47	47	47	42	47	47	39	47	47	33	47	39	42	47	34	37	41	30	32	36	40	28	32	35	25
		7-20	Interior	49	49	49	49	49	49	49	49	49	49	49	49	49	49	49	49	49	49	49	49	49	49	49	45	49	48	38	49	40	33	48	35	43	47	30	38	41	41	34
			Exposed	49	49	49	49	49	49	49	49	49	49	49	47	49	49	41	49	47	37	49	41	34	49	35	44	46	30	37	40	39	33	35	34	28	30	30	25	41	27	22
		20-27	Interior	56	56	56	56	56	56	56	56	56	56	56	56	56	56	56	56	56	56	56	56	56	56	56	55	56	56	50	55	51	39	54	42	33	53	37	28	52	33	37
			Exposed	56	56	56	56	56	56	56	56	56	56	56	56	56	56	53	56	55	49	56	52	42	56	42	34	56	36	28	53	31	35	47	41	29	41	37	25	36	32	22
		27-45	Interior	68*	68*	68*	68*	68*	68*	68*	68*	68*	68*	68*	68*	68*	68*	68*	68*	68*	60	59	59	59	57	57	57	55	55	55	54	54	51	52	52	41	50	48	36	48	41	31
			Exposed	68*	68*	68*	68*	68*	61	68*	68*	61	68*	61	60	61	61	58	60	60	55	59	59	52	57	54	42	53	47	35	45	39	29	38	34	38	34	30	33	30	41	28
70	B	0-7	Interior	42	42	42	42	42	42	42	42	42	42	42	42	42	42	42	42	42	42	42	42	42	42	42	42	42	42	42	42	42	42	42	42	42	42	42	42	42	42	42
			Exposed	42	42	42	42	42	42	42	42	42	42	42	42	42	42	42	42	42	42	42	42	42	42	42	42	42	42	42	42	42	41	42	42	36	42	42	32	42	40	42
		7-20	Interior	43	43	43	43	43	43	43	43	43	43	43	43	43	43	43	43	43	43	43	43	43	43	43	43	43	43	43	43	43	43	43	43	43	43	43	43	43	43	38
			Exposed	43	43	43	43	43	43	43	43	43	43	43	43	43	43	43	43	43	43	43	43	43	43	43	43	43	43	42	43	43	36	43	38	32	43	34	42	43	30	38
		20-27	Interior	50	50	50	50	50	50	50	50	50	50	50	50	50	50	50	50	50	50	50	50	50	50	50	50	50	50	50	50	50	50	50	50	50	50	50	50	50	50	50
			Exposed	50	50	50	50	50	50	50	50	50	50	50	50	50	50	50	50	50	50	50	50	50	50	50	50	50	50	50	50	50	46	50	49	38	50	41	32	50	36	28
		27-45	Interior	56*	56*	56*	56*	56*	56*	56*	56*	56*	56*	56*	56*	56*	56*	56*	56*	56*	56*	56*	56*	56*	56*	56*	56*	56*	56*	56*	55*	55*	55*	54*	54*	54*	55*	55*	55*	53*	53*	53*
			Exposed	56*	56*	56*	56*	56*	56*	56*	56*	56*	56*	56*	56*	56*	56*	56*	56*	56*	56*	56*	56*	56*	56*	56*	56*	56*	56*	56*	55*	55*	54*	54*	54*	48	55*	53*	40	53*	47	35
	C	0-7	Interior	42	42	42	42	42	42	42	42	42	42	42	42	42	42	42	42	42	42	42	42	42	42	42	42	42	42	42	42	42	42	42	42	39	42	42	34	42	42	30
			Exposed	42	42	42	42	42	42	42	42	42	42	42	42	42	42	42	42	42	42	42	42	42	42	42	39	42	42	33	42	41	44	42	36	38	42	31	34	38	42	30
		7-20	Interior	43	43	43	43	43	43	43	43	43	43	43	43	43	43	43	43	43	43	43	43	43	43	43	43	43	43	43	43	43	39	43	41	34	43	36	30	43	32	40
			Exposed	43	43	43	43	43	43	43	43	43	43	43	43	43	43	43	43	43	43	43	43	41	43	42	34	43	36	30	43	31	39	41	41	34	36	36	30	32	32	27
		20-27	Interior	50	50	50	50	50	50	50	50	50	50	50	50	50	50	50	50	50	50	50	50	50	50	50	50	50	50	50	50	50	50	50	50	42	50	45	35	49	39	30
			Exposed	50	50	50	50	50	50	50	50	50	50	50	50	50	50	50	50	50	50	50	50	50	50	50	42	50	43	35	50	37	29	50	33	36	50	43	31	44	39	27
		27-45	Interior	56*	56*	56*	56*	56*	56*	56*	56*	56*	56*	56*	56*	56*	56*	56*	56*	56*	56*	56*	56*	56*	54*	54*	54*	55*	55*	55*	54*	54*	54*	54*	54*	50	53*	53*	44	48	48	38
			Exposed	56*	56*	56*	56*	56*	56*	56*	56*	56*	56*	56*	56*	56*	56*	41	56*	56*	52	56*	56*	56*	54*	54*	52	55*	55*	43	54*	49	36	48	41	31	40	36	40	36	32	35
	D	0-7	Interior	44	44	44	44	44	44	44	44	44	44	44	44	44	44	44	44	44	44	44	44	44	44	44	44	44	44	43	44	44	37	44	44	32	44	40	43	44	36	38
			Exposed	44	44	44	44	44	44	44	44	44	44	44	44	44	44	44	44	44	42	44	44	39	44	44	33	44	39	42	44	34	37	41	30	32	36	40	28	32	35	25
		7-20	Interior	46	46	46	46	46	46	46	46	46	46	46	46	46	46	46	46	46	46	46	46	46	46	46	45	46	46	38	46	40	33	46	35	43	45	30	38	41	41	34
			Exposed	46	46	46	46	46	46	46	46	46	46	46	46	46	41	34	46	46	37	46	41	34	46	35	44	46	30	37	40	39	33	35	34	28	30	30	25	41	27	22
		20-27	Interior	53	53	53	53	53	53	53	53	53	53	53	53	53	53	53	53	53	53	53	53	53	53	53	53	53	53	50	52	51	39	51	42	33	50	37	28	49	33	37
			Exposed	53	53	53	53	53	53	53	53	53	53	53	53	53	53	53	53	53	49	53	52	42	53	42	34	53	36	28	52	31	35	47	41	29	41	37	25	36	32	22
		27-45	Interior	60*	60*	60*	60*	60*	60*	60*	60*	60*	60*	60*	60*	60*	60*	60*	59*	59*	59*	59*	59*	59*	59*	59*	59*	61*	61*	53	51	51	51	50	50	41	48	48	36	47	41	31
			Exposed	60*	60*	60*	60*	60*	60*	60*	60*	60*	60*	60*	60*	60*	60*	58	59*	59*	55	59*	59*	52	59*	54	42	53	47	35	45	39	29	38	34	38	34	30	33	30	41	28
80	B	0-7	Interior	39	39	39	39	39	39	39	39	39	39	39	39	39	39	39	39	39	39	39	39	39	39	39	39	39	39	39	39	39	39	39	39	39	39	39	39	39	39	39
			Exposed	39	39	39	39	39	39	39	39	39	39	39	39	39	39	39	39	39	39	39	39	39	39	39	39	39	39	39	39	39	39	39	39	36	39	39	32	39	39	42
		7-20	Interior	41	41	41	41	41	41	41	41	41	41	41	41	41	41	41	41	41	41	41	41	41	41	41	41	41	41	41	41	41	41	41	41	41	41	41	41	41	41	38
			Exposed	41	41	41	41	41	41	41	41	41	41	41	41	41	41	41	41	41	41	41	41	41	41	41	41	41	41	41	41	41	36	41	38	32	41	34	42	41	30	38
		20-27	Interior	50*	50*	50*	50*	50*	50*	50*	50*	50*	50*	50*	50*	50*	50*	50*	50*	50*	50*	50*	50*	50*	50*	50*	50*	50*	50*	50*	50*	50*	50*	50*	50*	50*	50*	50*	50*	50*	50*	50*
			Exposed	50*	50*	50*	50*	50*	50*	50*	50*	50*	50*	50*	50*	50*	50*	50*	50*	50*	50*	50*	50*	50*	50*	50*	50*	50*	50*	50*	50*	50*	46	50*	47	38	50*	41	32	50*	36	28
		27-45	Interior	53*	53*	53*	53*	53*	53*	53*	53*	53*	53*	53*	53*	53*	53*	53*	53*	53*	53*	53*	53*	53*	53*	53*	53*	53*	53*	53*	52*	52*	52*	51*	51*	51*	50*	50*	50*	49*	49*	49*
			Exposed	53*	53*	53*	53*	53*	53*	53*	53*	53*	53*	53*	53*	53*	53*	53*	53*	53*	53*	53*	53*	53*	53*	53*	53*	53*	53*	53*	52*	52*	52*	51*	51*	49*	50*	50*	40	49*	47*	35
	C	0-7	Interior	39	39	39	39	39	39	39	39	39	39	39	39	39	39	39	39	39	39	39	39	39	39	39	39	39	39	39	39	39	39	39	39	39	39	39	34	39	39	30
			Exposed	39	39	39	39	39	39	39	39	39	39	39	39	39	39	39	39	39	39	39	39	39	39	39	39	39	39	33	39	39	44	39	36	38	39	31	34	38	42	30
		7-20	Interior	41	41	41	41	41	41	41	41	41	41	41	41	41	41	41	41	41	41	41	41	41	41	41	41	41	41	41	41	41	39	41	41	34	41	36	30	41	32	40
			Exposed	41	41	41	41	41	41	41	41	41	41	41	41	41	41	41	41	41	41	41	41	41	41	41	34	41	36	30	41	31	39	41	41	34	36	36	30	32	32	27
		20-27	Interior	50*	50*	50*	50*	50*	50*	50*	50*	50*	50*	50*	50*	50*	50*	50*	50*	50*	50*	50*	50*	50*	50*	50*	50*	50*	50*	50*	50*	50*	50*	50*	50*	42	50*	45	35	47	39	30
			Exposed	50*	50*	50*	50*	50*	50*	50*	50*	50*	50*	50*	50*	50*	50*	50*	50*	50*	50*	50*	50*	50*	50*	50*	42	50*	43	35	50*	37	29	50*	33	36	47	43	31	44	39	27
		27-45	Interior	53*	53*	53*	53*	53*	53*	53*	53*	53*	53*	53*	53*	53*	53*	53*	53*	53*	53*	53*	53*	53*	52*	52*	52*	51*	51*	51*	49*	49*	49*	48*	48*	48*	49*	49*	44	48*	48*	38
			Exposed	53*	53*	53*	53*	53*	53*	53*	53*	53*	53*	53*	53*	53*	53*	53*	53*	53*	53*	53*	53*	53*	52*	52*	52*	51*	51*	43	49*	49*	36	48*	41	31	40	36	40	36	32	35
	D	0-7	Interior	41	41	41	41	41	41	41	41	41	41	41	41	41	41	41	41	41	41	41	41	41	41	41	41	41	41	41	41	41	37	41	41	32	41	40	43	41	36	38
			Exposed	41	41	41	41	41	41	41	41	41	41	41	41	41	41	41	41	41	41	41	41	39	41	41	33	41	39	42	41	34	37	41	30	32	36	40	28	32	35	25
		7-20	Interior	43	43	43	43	43	43	43	43	43	43	43	43	43	43	43	43	43	43	43	43	43	43	43	43	43	43	38	43	40	33	43	35	43	43	30	38	41	41	34
			Exposed	43	43	43	43	43	43	43	43	43	43	43	43	43	41	34	43	43	37	43	41	34	43	35	44	43	30	37	40	39	33	35	34	28	30	30	25	41	27	22
		20-27	Interior	50	50	50	50	50	50	50	50	50	50	50	50	50	50	50	50	50	50	50	50	50	50	50	50	50	50	50	50	50	39	49	42	33	48	37	28	47	33	37
			Exposed	50	50	50	50	50	50	50	50	50	50	50	50	50	50	50	50	50	49	50	50	42	50	42	34	50	36	28	50	31	35	47	41	29	41	37	25	36	32	22
		27-45	Interior	55*	55*	55*	55*	55*	55*	55*	55*	55*	55*	55*	55*	55*	55*	55*	54*	54*	54*	54*	54*	54*	55*	55*	55*	53*	53*	53*	53*	53*	49	52*	52*	41	47	47	36	45	41	31
			Exposed	55*	55*	55*	55*	55*	55*	55*	55*	55*	55*	55*	55*	55*	55*	55*	54*	54*	54*	54*	54*	52*	55*	54*	42	53*	47	35	45	39	29	38	34	38	34	30	33	30	41	28

* Cells with an astrisks indicates that the L-foot must be oriented in the Y- direction as indicated in the image.

10 Highlighted cell indicate 3-rail system span. Contact Unirac Engineering Services for support.

~~10~~ Highlighted cell with strikethrough indicate 3-rail system span and module clamp allowable capacity exceeds with 3-rails. 4-Rail system required. Contact Unirac Engineering Services for support.

UNIRAC

ASCE 7-16	II	30 ft	Ss = 3.00	19 sq.ft	PORTRAIT	CROSS-SLOPE	NXT	NXT COMBO	Stronghold BUTYL Rafter #14S
Design Standard	Risk Category	Roof Height	Seismic	Module Area	Orientation	Rail Direction	Rail Type	Clamp	Attachment

SPAN TABLES

Maximum Allowable Rail Spans for Rooftop Solar Panels Parallel to the Roof Surface (inches)

Ground Snow Load (psf)	Wind Exposure Category	Roof Tilt Angle (deg)	Panel Exposure	Basic Wind Speed (mph)																																								
				90			95			100			105			110			115			120			130			140			150			160			170			180		
				Roof Wind Zone																																								
				1	2	3	1	2	3	1	2	3	1	2	3	1	2	3	1	2	3	1	2	3	1	2	3	1	2	3	1	2	3	1	2	3	1	2	3	1	2	3
90	B	0-7	Interior	37	37	37	37	37	37	37	37	37	37	37	37	37	37	37	37	37	37	37	37	37	37	37	37	37	37	37	37	37	37	37	37	37	37	37	37	37	37	37	37	37
			Exposed	37	37	37	37	37	37	37	37	37	37	37	37	37	37	37	37	37	37	37	37	37	37	37	37	37	37	37	37	37	37	37	37	36	37	37	32	37	37	42
		7-20	Interior	38	38	38	38	38	38	38	38	38	38	38	38	38	38	38	38	38	38	38	38	38	38	38	38	38	38	38	38	38	38	38	38	38	38	38	38	38	38	38	38	38
			Exposed	38	38	38	38	38	38	38	38	38	38	38	38	38	38	38	38	38	38	38	38	38	38	38	38	38	38	38	38	38	36	38	38	32	38	34	42	38	30	38
		20-27	Interior	47*	47*	47*	47*	47*	47*	47*	47*	47*	47*	47*	47*	47*	47*	47*	47*	47*	47*	47*	47*	47*	47*	47*	47*	47*	47*	47*	47*	47*	47*	47*	47*	47*	47*	47*	47*	47*	47*	47*	47*	47*
			Exposed	47*	47*	47*	47*	47*	47*	47*	47*	47*	47*	47*	47*	47*	47*	47*	47*	47*	47*	47*	47*	47*	47*	47*	47*	47*	47*	47*	47*	47*	46*	47*	47*	38	47*	41	32	47*	36	28
		27-45	Interior	50*	50*	50*	50*	50*	50*	50*	50*	50*	50*	50*	50*	50*	50*	50*	50*	50*	50*	50*	50*	50*	50*	50*	50*	50*	50*	50*	50*	50*	50*	49*	49*	49*	48*	48*	48*	47*	47*	47*
			Exposed	50*	50*	50*	50*	50*	50*	50*	50*	50*	50*	50*	50*	50*	50*	50*	50*	50*	50*	50*	50*	50*	50*	50*	50*	50*	50*	50*	50*	50*	50*	49*	49*	48*	48*	48*	40	47*	47*	35
	C	0-7	Interior	37	37	37	37	37	37	37	37	37	37	37	37	37	37	37	37	37	37	37	37	37	37	37	37	37	37	37	37	37	37	37	37	37	37	37	34	37	37	30
			Exposed	37	37	37	37	37	37	37	37	37	37	37	37	37	37	37	37	37	37	37	37	37	37	37	33	37	37	44	37	36	38	37	31	34	37	42	30
		7-20	Interior	38	38	38	38	38	38	38	38	38	38	38	38	38	38	38	38	38	38	38	38	38	38	38	38	38	38	38	38	38	34	38	36	30	38	32	40
			Exposed	38	38	38	38	38	38	38	38	38	38	38	38	38	38	38	38	38	38	38	38	38	38	38	34	38	36	30	38	31	39	38	41	34	36	36	30	32	32	27
		20-27	Interior	47*	47*	47*	47*	47*	47*	47*	47*	47*	47*	47*	47*	47*	47*	47*	47*	47*	47*	47*	47*	47*	47*	47*	47*	47*	47*	47*	47*	47*	47*	47*	47*	42	47*	45*	35	47*	39	30
			Exposed	47*	47*	47*	47*	47*	47*	47*	47*	47*	47*	47*	47*	47*	47*	47*	47*	47*	47*	47*	47*	47*	47*	47*	42	47*	43	35	47*	37	29	47*	33	36	47*	43	31	44*	39	27
		27-45	Interior	50*	50*	50*	50*	50*	50*	50*	50*	50*	50*	50*	50*	50*	50*	50*	50*	50*	50*	50*	50*	50*	50*	50*	50*	49*	49*	49*	48*	48*	48*	47*	47*	47*	45*	45*	44*	44*	44*	38
			Exposed	50*	50*	50*	50*	50*	50*	50*	50*	50*	50*	50*	50*	50*	50*	50*	50*	50*	50*	50*	50*	50*	50*	50*	50*	49*	49*	43*	48*	48*	36	47*	41	31	40	36	40	36	32	35
	D	0-7	Interior	39	39	39	39	39	39	39	39	39	39	39	39	39	39	39	39	39	39	39	39	39	39	39	39	39	39	39	39	39	37	39	39	32	39	39	43	39	36	38
			Exposed	39	39	39	39	39	39	39	39	39	39	39	39	39	39	39	39	39	39	39	39	39	39	39	33	39	39	42	39	34	37	39	30	32	36	40	28	32	35	25
		7-20	Interior	40	40	40	40	40	40	40	40	40	40	40	40	40	40	40	40	40	40	40	40	40	40	40	40	40	40	38	40	40	33	40	35	43	40	30	38	40	41	34
			Exposed	40	40	40	40	40	40	40	40	40	40	40	40	40	40	40	40	40	37	40	40	34	40	35	44	40	30	37	40	39	33	35	34	28	30	30	25	41	27	22
		20-27	Interior	50*	50*	50*	50*	50*	50*	50*	50*	50*	50*	50*	50*	50*	50*	50*	50*	50*	50*	50*	50*	50*	50*	50*	50*	50*	50*	50*	50*	50*	39	49*	42	33	46	37	28	45	33	37
			Exposed	50*	50*	50*	50*	50*	50*	50*	50*	50*	50*	50*	50*	50*	50*	50*	50*	50*	49*	50*	50*	42	50*	42	34	50*	36	28	50*	31	35	47	41	29	41	37	25	36	32	22
		27-45	Interior	53*	53*	53*	53*	53*	53*	53*	53*	53*	53*	53*	53*	53*	53*	53*	52*	52*	52*	52*	52*	52*	50*	50*	50*	49*	49*	49*	48*	48*	48*	48*	48*	41	47*	47*	36	47*	41	31
			Exposed	53*	53*	53*	53*	53*	53*	53*	53*	53*	53*	53*	53*	53*	53*	53*	52*	52*	52*	52*	52*	52*	50*	50*	42	49*	47*	35	45	39	29	38	34	38	34	30	33	30	41	28
100	B	0-7	Interior	35	35	35	35	35	35	35	35	35	35	35	35	35	35	35	35	35	35	35	35	35	35	35	35	35	35	35	35	35	35	35	35	35	35	35	35	35	35	35
			Exposed	35	35	35	35	35	35	35	35	35	35	35	35	35	35	35	35	35	35	35	35	35	35	35	35	35	35	35	35	35	35	35	35	35	35	35	32	35	35	42
		7-20	Interior	37	37	37	37	37	37	37	37	37	37	37	37	37	37	37	37	37	37	37	37	37	37	37	37	37	37	37	37	37	37	37	37	37	37	37	37	37	37	37
			Exposed	37	37	37	37	37	37	37	37	37	37	37	37	37	37	37	37	37	37	37	37	37	37	37	37	37	37	37	37	37	36	37	37	32	37	34	42	37	30	38
		20-27	Interior	43*	43*	43*	43*	43*	43*	43*	43*	43*	43*	43*	43*	43*	43*	43*	43*	43*	43*	43*	43*	43*	43*	43*	43*	43*	43*	43*	43*	43*	43*	43*	43*	43*	43*	43*	43*	43*	43*	43*
			Exposed	43*	43*	43*	43*	43*	43*	43*	43*	43*	43*	43*	43*	43*	43*	43*	43*	43*	43*	43*	43*	43*	43*	43*	43*	43*	43*	43*	43*	43*	43*	43*	43*	38	43*	41*	32	43*	36	28
		27-45	Interior	47*	47*	47*	47*	47*	47*	47*	47*	47*	47*	47*	47*	47*	47*	47*	47*	47*	47*	47*	47*	47*	47*	47*	47*	47*	47*	47*	47*	47*	47*	47*	47*	47*	47*	47*	47*	46*	46*	46*
			Exposed	47*	47*	47*	47*	47*	47*	47*	47*	47*	47*	47*	47*	47*	47*	47*	47*	47*	47*	47*	47*	47*	47*	47*	47*	47*	47*	47*	47*	47*	47*	47*	47*	47*	47*	47*	40*	46*	46*	35
	C	0-7	Interior	35	35	35	35	35	35	35	35	35	35	35	35	35	35	35	35	35	35	35	35	35	35	35	35	35	35	35	35	35	35	35	35	35	35	35	34	35	35	30
			Exposed	35	35	35	35	35	35	35	35	35	35	35	35	35	35	35	35	35	35	35	35	35	35	35	33	35	35	43	35	35	38	35	31	34	35	42	30
		7-20	Interior	37	37	37	37	37	37	37	37	37	37	37	37	37	37	37	37	37	37	37	37	37	37	37	37	37	37	37	37	37	37	37	37	34	37	36	30	37	32	40
			Exposed	37	37	37	37	37	37	37	37	37	37	37	37	37	37	37	37	37	37	37	37	34	37	36	30	37	31	39	37	41	34	36	36	30	32	32	27
		20-27	Interior	43*	43*	43*	43*	43*	43*	43*	43*	43*	43*	43*	43*	43*	43*	43*	43*	43*	43*	43*	43*	43*	43*	43*	43*	43*	43*	43*	43*	43*	42*	43*	43*	42*	43*	43*	35	43*	39	30
			Exposed	43*	43*	43*	43*	43*	43*	43*	43*	43*	43*	43*	43*	43*	43*	43*	43*	43*	43*	43*	43*	43*	43*	43*	42*	43*	43*	35	43*	37	29	43*	33	36	43*	43	31	43*	39	27
		27-45	Interior	47*	47*	47*	47*	47*	47*	47*	47*	47*	47*	47*	47*	47*	47*	47*	47*	47*	47*	47*	47*	47*	47*	47*	47*	47*	47*	47*	46*	46*	46*	45*	45*	45*	44*	44*	44*	43*	43*	38*
			Exposed	47*	47*	47*	47*	47*	47*	47*	47*	47*	47*	47*	47*	47*	47*	47*	47*	47*	47*	47*	47*	47*	47*	47*	43*	46*	46*	36	45*	41*	31	40*	36	40	36	32	35			
	D	0-7	Interior	37	37	37	37	37	37	37	37	37	37	37	37	37	37	37	37	37	37	37	37	37	37	37	37	37	37	37	37	37	37	37	37	32	37	37	43	37	36	38
			Exposed	37	37	37	37	37	37	37	37	37	37	37	37	37	37	37	37	37	37	37	37	37	37	37	33	37	37	42	37	34	37	37	30	32	36	40	28	32	35	25
		7-20	Interior	38	38	38	38	38	38	38	38	38	38	38	38	38	38	38	38	38	38	38	38	38	38	38	38	38	38	38	38	38	33	38	35	43	38	30	38	38	41	34
			Exposed	38	38	38	38	38	38	38	38	38	38	38	38	38	38	38	38	38	37	38	38	34	38	35	44	38	30	37	38	39	33	35	34	28	30	30	25	41	27	22
		20-27	Interior	47*	47*	47*	47*	47*	47*	47*	47*	47*	47*	47*	47*	47*	47*	47*	47*	47*	47*	47*	47*	47*	47*	47*	47*	47*	47*	47*	47*	47*	39	47*	42	33	46*	37	28	45*	33	37
			Exposed	47*	47*	47*	47*	47*	47*	47*	47*	47*	47*	47*	47*	47*	47*	47*	47*	47*	47*	47*	47*	42	47*	42	34	47*	36	28	47*	31	35	47*	41	29	41	37	25	36	32	22
		27-45	Interior	50*	50*	50*	50*	50*	50*	50*	50*	50*	50*	50*	50*	50*	50*	50*	50*	50*	50*	50*	50*	50*	49*	49*	49*	47*	47*	47*	46*	46*	46*	45*	45*	42*	44*	44*	36	43*	41	31
			Exposed	50*	50*	50*	50*	50*	50*	50*	50*	50*	50*	50*	50*	50*	50*	50*	50*	50*	50*	50*	50*	50*	49*	49*	42*	47*	47*	35	45*	39	29	38	34	38	34	30	33	30	41	28

* Cells with an astrisks indicates that the L-foot must be oriented in the Y- direction as indicated in the image.

10 Highlighted cell indicate 3-rail system span. Contact Unirac Engineering Services for support.

~~10~~ Highlighted cell with strikethrough indicate 3-rail system span and module clamp allowable capacity exceeds with 3-rails. 4-Rail system required. Contact Unirac Engineering Services for support.

UNIRAC

ASCE 7-16	II	30 ft	Ss = 3.00	19 sq.ft	LANDSCAPE	CROSS-SLOPE	NXT	NXT COMBO	Stronghold BUTYL Rafter #14S
Design Standard	Risk Category	Roof Height	Seismic	Module Area	Orientation	Rail Direction	Rail Type	Clamp	Attachment

SPAN TABLES

Maximum Allowable Rail Spans for Rooftop Solar Panels Parallel to the Roof Surface (inches)

Ground Snow Load (psf)	Wind Exposure Category	Roof Tilt Angle (deg)	Panel Exposure	Basic Wind Speed (mph)																																								
				90			95			100			105			110			115			120			130			140			150			160			170			180		
				Roof Wind Zone																																								
				1	2	3	1	2	3	1	2	3	1	2	3	1	2	3	1	2	3	1	2	3	1	2	3	1	2	3	1	2	3	1	2	3	1	2	3	1	2	3
0	B	0-7	Interior	102	102	102	102	102	102	102	102	101	102	102	96	102	102	92	102	102	88	102	97	84	102	90	78	97	84	73	91	79	69	86	75	65	81	71	62	77	67	60
			Exposed	102	102	92	102	100	87	102	95	83	102	91	79	101	87	76	97	84	73	93	81	70	86	75	65	80	70	62	76	66	59	71	63	55	68	61	52	65	58	60
		7-20	Interior	102	102	102	102	102	102	102	102	98	102	102	93	102	97	89	102	93	85	102	89	81	93	82	75	87	76	69	82	71	65	78	67	62	74	64	60	71	61	57
			Exposed	102	97	88	102	92	83	102	87	79	95	82	75	90	79	72	87	75	69	84	72	66	78	67	62	74	63	59	70	60	56	66	57	52	64	54	59	61	51	57
		20-27	Interior	103	103	103	103	103	103	103	103	103	103	103	103	103	103	100	103	101	95	103	97	91	103	89	83	100	83	77	93	77	72	88	72	67	84	68	64	80	65	61
			Exposed	103	103	100	103	100	94	103	95	88	103	90	84	103	86	80	99	82	76	95	79	73	88	73	67	83	68	63	78	64	60	74	61	56	71	59	52	68	56	47
		27-45	Interior	103	103	103	103	103	103	103	103	103	103	103	103	103	103	103	103	103	99	103	103	95	103	98	88	99	91	82	92	85	77	86	80	72	81	75	68	76	72	65
			Exposed	103	103	103	103	103	98	103	103	93	103	99	89	103	94	85	99	90	81	94	87	78	86	80	72	80	75	68	74	70	64	70	66	61	66	63	58	63	61	54
	C	0-7	Interior	102	102	95	102	102	90	102	99	85	102	94	81	102	90	78	100	86	75	96	83	72	89	77	67	83	72	63	78	68	60	74	65	57	70	62	54	66	60	51
			Exposed	102	90	78	99	85	74	94	82	71	90	78	68	86	75	65	82	72	63	79	69	61	74	65	58	69	62	53	65	59	49	62	55	57	60	52	54	57	59	50
		7-20	Interior	102	101	92	102	95	86	102	90	82	100	85	78	93	81	74	89	78	71	86	75	68	81	69	64	76	65	61	72	62	58	68	59	54	65	56	51	62	52	59
			Exposed	93	81	74	88	77	70	85	73	67	81	70	64	78	67	62	76	64	60	73	62	59	68	59	54	65	55	50	62	51	57	59	59	54	56	55	50	52	52	45
		20-27	Interior	103	103	103	103	103	97	103	98	92	103	93	87	103	89	83	103	85	79	98	81	76	91	75	70	85	70	65	81	66	61	76	63	58	73	60	54	70	57	51
			Exposed	103	89	83	101	84	78	96	80	74	92	76	71	88	73	67	85	70	65	82	67	62	77	63	59	72	60	54	68	56	48	65	53	58	62	60	53	60	57	47
		27-45	Interior	103	103	103	103	103	102	103	103	97	103	102	92	103	98	88	103	93	84	98	90	81	89	83	75	83	77	70	77	72	66	72	68	62	68	65	59	65	62	56
			Exposed	103	97	88	101	92	83	96	88	79	91	84	76	86	80	72	82	77	69	79	74	67	73	69	63	67	64	59	64	61	55	61	59	51	58	55	59	55	52	56
	D	0-7	Interior	102	101	87	102	96	83	102	91	79	101	87	75	96	83	72	92	80	69	89	77	67	82	72	63	77	67	60	72	64	56	68	61	52	65	58	60	62	55	57
			Exposed	96	83	72	91	79	69	87	76	66	83	72	63	80	70	61	76	67	59	74	65	57	69	61	53	65	58	59	62	54	56	59	50	52	55	58	48	52	55	43
		7-20	Interior	102	92	84	102	87	79	94	82	75	90	78	72	86	75	69	83	72	66	80	69	64	75	64	60	71	61	57	67	58	53	64	54	60	61	51	57	59	59	54
			Exposed	86	75	68	82	71	65	79	67	63	76	65	61	73	63	59	71	61	56	68	59	54	64	54	49	61	50	56	58	58	53	54	54	48	51	51	42	59	45	38
		20-27	Interior	103	101	94	103	95	89	103	90	84	103	85	80	98	82	76	94	78	72	90	75	69	85	69	64	80	65	61	75	62	57	71	59	53	68	56	47	65	53	58
			Exposed	98	81	76	93	77	72	89	73	68	85	70	65	82	67	63	79	65	60	76	63	58	72	59	53	68	55	46	64	52	56	61	59	52	59	56	43	56	53	38
		27-45	Interior	103	103	99	103	103	93	103	99	89	103	94	85	98	90	81	93	86	78	89	83	75	82	77	69	76	71	65	71	67	61	67	64	58	63	61	55	61	59	51
			Exposed	98	90	81	92	85	77	87	81	73	83	77	70	79	74	67	75	71	64	72	68	62	67	64	59	63	61	54	60	58	49	57	54	58	54	51	54	51	59	50
10	B	0-7	Interior	91	91	91	91	91	91	91	91	91	91	91	91	91	91	91	91	91	88	91	91	84	91	90	78	91	84	73	91	79	69	86	75	65	81	71	62	77	67	60
			Exposed	91	91	91	91	91	87	91	91	83	91	91	79	91	87	76	91	84	73	91	81	70	86	75	65	80	70	62	76	66	59	71	63	55	68	61	52	65	58	60
		7-20	Interior	91	91	91	91	91	91	91	91	91	91	91	91	91	91	89	91	91	85	91	89	81	91	82	75	87	76	69	82	71	65	78	67	62	74	64	60	71	61	57
			Exposed	91	91	88	91	91	83	91	87	79	91	82	75	90	79	72	87	75	69	84	72	66	78	67	62	74	63	59	70	60	56	66	57	52	64	54	59	61	51	57
		20-27	Interior	100	100	100	100	100	100	100	100	100	100	100	100	100	100	100	100	100	95	100	97	91	100	89	83	100	83	77	93	77	72	88	72	67	84	68	64	80	65	61
			Exposed	100	100	100	100	100	94	100	95	88	100	90	84	100	86	80	99	82	76	95	79	73	88	73	67	83	68	63	78	64	60	74	61	56	71	59	52	68	56	47
		27-45	Interior	102	102	102	102	102	102	102	102	102	102	102	102	102	102	102	102	102	99	102	102	95	102	98	88	99	91	82	92	85	77	86	80	72	81	75	68	76	72	65
			Exposed	102	102	102	102	102	98	102	102	93	102	99	89	102	94	85	99	90	81	94	87	78	86	80	72	80	75	68	74	70	64	70	66	61	66	63	58	63	61	54
	C	0-7	Interior	91	91	91	91	91	90	91	91	85	91	91	81	91	90	78	91	86	75	91	83	72	89	77	67	83	72	63	78	68	60	74	65	57	70	62	54	66	60	51
			Exposed	91	90	78	91	85	74	91	82	71	90	78	68	86	75	65	82	72	63	79	69	61	74	65	58	69	62	53	65	59	49	62	55	57	60	52	54	57	59	50
		7-20	Interior	91	91	91	91	91	86	91	90	82	91	85	78	91	81	74	89	78	71	86	75	68	81	69	64	76	65	61	72	62	58	68	59	54	65	56	51	62	52	59
			Exposed	91	81	74	88	77	70	85	73	67	81	70	64	78	67	62	76	64	60	73	62	59	68	59	54	65	55	50	62	51	57	59	59	54	56	55	50	52	52	45
		20-27	Interior	100	100	100	100	100	97	100	98	92	100	93	87	100	89	83	100	85	79	98	81	76	91	75	70	85	70	65	81	66	61	76	63	58	73	60	54	70	57	51
			Exposed	100	89	83	100	84	78	96	80	74	92	76	71	88	73	67	85	70	65	82	67	62	77	63	59	72	60	54	68	56	48	65	53	58	62	60	53	60	57	47
		27-45	Interior	102	102	102	102	102	102	102	102	97	102	102	92	102	98	88	102	93	84	98	90	81	89	83	75	83	77	70	77	72	66	72	68	62	68	65	59	65	62	56
			Exposed	102	97	88	101	92	83	96	88	79	91	84	76	86	80	72	82	77	69	79	74	67	73	69	63	67	64	59	64	61	55	61	59	51	58	55	59	55	52	56
	D	0-7	Interior	91	91	87	91	91	83	91	91	79	91	87	75	91	83	72	91	80	69	89	77	67	82	72	63	77	67	60	72	64	56	68	61	52	65	58	60	62	55	57
			Exposed	91	83	72	91	79	69	87	76	66	83	72	63	80	70	61	76	67	59	74	65	57	69	61	53	65	58	59	62	54	56	59	50	52	55	58	48	52	55	43
		7-20	Interior	91	91	84	91	87	79	91	82	75	90	78	72	86	75	69	83	72	66	80	69	64	75	64	60	71	61	57	67	58	53	64	54	60	61	51	57	59	59	54
			Exposed	86	75	68	82	71	65	79	67	63	76	65	61	73	63	59	71	61	56	68	59	54	64	54	49	61	50	56	58	58	53	54	54	48	51	51	42	59	45	38
		20-27	Interior	101	101	94	101	95	89	101	90	84	101	85	80	98	82	76	94	78	72	90	75	69	85	69	64	80	65	61	75	62	57	71	59	53	68	56	47	65	53	58
			Exposed	98	81	76	93	77	72	89	73	68	85	70	65	82	67	63	79	65	60	76	63	58	72	59	53	68	55	46	64	52	56	61	59	52	59	56	43	56	53	38
		27-45	Interior	103	103	99	103	103	93	103	99	89	103	94	85	98	90	81	93	86	78	89	83	75	82	77	69	76	71	65	71	67	61	67	64	58	63	61	55	61	59	51
			Exposed	98	90	81	92	85	77	87	81	73	83	77	70	79	74	67	75	71	64	72	68	62	67	64	59	63	61	54	60	58	49	57	54	58	54	51	54	51	59	50
20	B	0-7	Interior	78	78	78	78	78	78	78	78	78	78	78	78	78	78	78	78	78	78	78	78	78	78	78	73	78	78	73	78	78	69	78	75	65	78	71	62	77	67	60
			Exposed	78	78	78	78	78	78	78	78	78	78	78	78	78	78	76	78	78	73	78	78	70	78	75	65	78	70	62	76	66	59	71	63	55	68	61	52	65	58	60
		7-20	Interior	78	78	78	78	78	78	78	78	78	78	78	78	78	78	78	78	78	78	78	78	78	78	78	75	78	76	69	78	71	65	78	67	62	74	64	60	71	61	57
			Exposed	78	78	78	78	78	78	78	78	78	78	78	75	78	78	72	78	75	69	78	72	66	78	67	62	74	63	59	70	60	56	66	57	52	64	54	59	61	51	57
		20-27	Interior	92	92	92	92	92	92	92	92	92	92	92	92	92	92	92	92	92	92	92	92	91	92	89	83	92	83	77	92	77	72	88	72	67	84	68	64	80	65	61
			Exposed	92	92	92	92	92	92	92	92	88	92	90	84	92	86	80	92	82	76	92	79	73	88	73	67	83	68	63	78	64	60	74	61	56	71	59	52	68	56	47
		27-45	Interior	96	96	96	96	96	96	96	96	96	96	96	96	96	96	96	96	96	96	96	96	95	96	96	88	96	91	82	92	85	77	86	80	72	81	75	68	76	72	65
			Exposed	96	96	96	96	96	96	96	96	93	96	96	89	96	94	85	96	90	81	94	87	78	86	80	72	80	75	68	74	70	64	70	66	61	66	63	58	63	61	54
	C	0-7	Interior	78	78	78	78	78	78	78	78	78	78	78	78	78	78	78	78	78	75	78	78	72	78	77	67	78	72	63	78	68	60	74	65	57	70	62	54	66	60	51
			Exposed	78	78	78	78	78	74	78	78	71	78	78	68	78	75	65	78	72	63	78	69	61	74	65	58	69	62	53	65	59	49	62	55	57	60	52	54	57	59	50
		7-20	Interior	78	78	78	78	78	78	78	78	78	78	78	78	78	78	74	78	78	71	78	75	68	78	69	64	76	65	61	72	62	58	68	59	54	65	56	51	62	52	59
			Exposed	78	78	74	78	77	70	78	73	67	78	70	64	78	67	62	76	64	60	73	62	59	68	59	54	65	55	50	62	51	57	59	59	54	56	55	50	52	52	45
		20-27	Interior	92	92	92	92	92	92	92	92	92	92	92	87	92	89	83	92	85	79	92	81	76	91	75	70	85	70	65	81	66	61	76	63	58	73	60	54	70	57	51
			Exposed	92	89	83	92	84	78	92	80	74	92	76	71	88	73	67	85	70	65	82	67	62	77	63	59	72	60	54	68	56	48	65	53	58	62	60	53	60	57	47
		27-45	Interior	96	96	96	96	96	96	96	96	96	96	96	92	96	96	88	96	93	84	96	90	81	89	83	75	83	77	70	77	72	66	72	68	62	68	65	59	65	62	56
			Exposed	96	96	88	96	92	83	96	88	79	91	84	76	86	80	72	82	77	69	79	74	67	73	69	63	67	64	59	64	61	55	61	59	51	58	55	59	55	52	56
	D	0-7	Interior	78	78	78	78	78	78	78	78	78	78	78	75	78	78	72	78	78	69	78	77	67	78	72	63	77	67	60	72	64	56	68	61	52	65	58	60	62	55	57
			Exposed	78	78	72	78	78	69	78	76	66	78	72	63	78	70	61	76	67	59	74	65	57	69	61	53	65	58	59	62	54	56	59	50	52	55	58	48	52	55	43
		7-20	Interior	78	78	78	78	78	78	78	78	75	78	78	72	78	75	69	78	72	66	78	69	64	75	64	60	71	61	57	67	58	53	64	54	60	61	51	57	59	59	54
			Exposed	78	75	68	78	71	65	78	67	63	76	65	61	73	63	59	71	61	56	68	59	54	64	54	49	61	50	56	58	58	53	54	54	48	51	51	42	59	45	38
		20-27	Interior	94	94	94	94	94	89	94	90	84	94	85	80	94	82	76	94	78	72	90	75	69	85	69	64	80	65	61	75	62	57	71	59	53	68	56	47	65	53	58
			Exposed	94	81	76	93	77	72	89	73	68	85	70	65	82	67	63	79	65	60	76	63	58	72	59	53	68	55	46	64	52	56	61	59	52	59	56	43	56	53	38
		27-45	Interior	97	97	97	97	97	93	97	97	89	97	94	85	97	90	81	93	86	78	89	83	75	82	77	69	76	71	65	71	67	61	67	64	58	63	61	55	61	59	51
			Exposed	97	90	81	92	85	77	87	81	73	83	77	70	79	74	67	75	71	64	72	68	62	67	64	59	63	61	54	60	58	49	57	54	58	54	51	54	51	59	50

* Cells with an astrisks indicates that the L-foot must be oriented in the Y- direction as indicated in the image.

10 Highlighted cell indicate 3-rail system span. Contact Unirac Engineering Services for support.

~~10~~ Highlighted cell with strikethrough indicate 3-rail system span and module clamp allowable capacity exceeds with 3-rails. 4-Rail system required. Contact Unirac Engineering Services for support.

UNIRAC

ASCE 7-16	II	30 ft	Ss = 3.00	19 sq.ft	LANDSCAPE	CROSS-SLOPE	NXT	NXT COMBO	Stronghold BUTYL Rafter #14S
Design Standard	Risk Category	Roof Height	Seismic	Module Area	Orientation	Rail Direction	Rail Type	Clamp	Attachment

SPAN TABLES

Maximum Allowable Rail Spans for Rooftop Solar Panels Parallel to the Roof Surface (inches)

Ground Snow Load (psf)	Wind Exposure Category	Roof Tilt Angle (deg)	Panel Exposure	Basic Wind Speed (mph)																																						
				90			95			100			105			110			115			120			130			140			150			160			170			180		
				Roof Wind Zone																																						
				1	2	3	1	2	3	1	2	3	1	2	3	1	2	3	1	2	3	1	2	3	1	2	3	1	2	3	1	2	3	1	2	3	1	2	3	1	2	3
30	B	0-7	Interior	77	77	77	77	77	77	77	77	77	77	77	77	77	77	77	77	77	77	77	77	77	77	77	77	77	77	73	77	77	69	77	75	65	77	71	62	77	67	60
			Exposed	77	77	77	77	77	77	77	77	77	77	77	77	77	77	76	77	77	73	77	77	70	77	75	65	77	70	62	76	66	59	71	63	55	68	61	52	65	58	60
		7-20	Interior	78	78	78	78	78	78	78	78	78	78	78	78	78	78	78	78	78	78	78	78	78	78	78	75	78	76	69	78	71	65	78	67	62	74	64	60	71	61	57
			Exposed	78	78	78	78	78	78	78	78	78	78	78	75	78	78	72	78	75	69	78	72	66	78	67	62	74	63	59	70	60	56	66	57	52	64	54	59	61	51	57
		20-27	Interior	86	86	86	86	86	86	86	86	86	86	86	86	86	86	86	86	86	86	86	86	86	86	86	83	86	83	77	86	77	72	86	72	67	84	68	64	80	65	61
			Exposed	86	86	86	86	86	86	86	86	86	86	86	84	86	86	80	86	82	76	86	79	73	86	73	67	83	68	63	78	64	60	74	61	56	71	59	52	68	56	47
		27-45	Interior	90	90	90	90	90	90	90	90	90	90	90	90	90	90	90	90	90	90	90	90	90	90	90	88	90	90	82	90	85	77	86	80	72	81	75	68	76	72	65
			Exposed	90	90	90	90	90	90	90	90	90	90	90	89	90	90	85	90	90	81	90	87	78	86	80	72	80	75	68	74	70	64	70	66	61	66	63	58	63	61	54
	C	0-7	Interior	77	77	77	77	77	77	77	77	77	77	77	77	77	77	77	77	77	75	77	77	72	77	77	67	77	72	63	77	68	60	74	65	57	70	62	54	66	60	51
			Exposed	77	77	77	77	77	74	77	77	71	77	77	68	77	75	65	77	72	63	77	69	61	74	65	58	69	62	53	65	59	49	62	55	57	60	52	54	57	59	50
		7-20	Interior	78	78	78	78	78	78	78	78	78	78	78	78	78	78	74	78	78	71	78	75	68	78	69	64	76	65	61	72	62	58	68	59	54	65	56	51	62	52	59
			Exposed	78	78	74	78	77	70	78	73	67	78	70	64	78	67	62	76	64	60	73	62	59	68	59	54	65	55	50	62	51	57	59	59	54	56	55	50	52	52	45
		20-27	Interior	86	86	86	86	86	86	86	86	86	86	86	86	86	86	83	86	85	79	86	81	76	86	75	70	85	70	65	81	66	61	76	63	58	73	60	54	70	57	51
			Exposed	86	86	83	86	84	78	86	80	74	86	76	71	86	73	67	85	70	65	82	67	62	77	63	59	72	60	54	68	56	48	65	53	58	62	60	53	60	57	47
		27-45	Interior	90	90	90	90	90	90	90	90	90	90	90	90	90	90	88	90	90	84	90	90	81	89	83	75	83	77	70	77	72	66	72	68	62	68	65	59	65	62	56
			Exposed	90	90	88	90	90	83	90	88	79	90	84	76	86	80	72	82	77	69	79	74	67	73	69	63	67	64	59	64	61	55	61	59	51	58	55	59	55	52	56
	D	0-7	Interior	78	78	78	78	78	78	78	78	78	78	78	75	78	78	72	78	78	69	78	77	67	78	72	63	77	67	60	72	64	56	68	61	52	65	58	60	62	55	57
			Exposed	78	78	72	78	78	69	78	76	66	78	72	63	78	70	61	76	67	59	74	65	57	69	61	53	65	58	59	62	54	56	59	50	52	55	58	48	52	55	43
		7-20	Interior	78	78	78	78	78	78	78	78	75	78	78	72	78	75	69	78	72	66	78	69	64	75	64	60	71	61	57	67	58	53	64	54	60	61	51	57	59	59	54
			Exposed	78	75	68	78	71	65	78	67	63	76	65	61	73	63	59	71	61	56	68	59	54	64	54	49	61	50	56	58	58	53	54	54	48	51	51	42	59	45	38
		20-27	Interior	88	88	88	88	88	88	88	88	84	88	85	80	88	82	76	88	78	72	88	75	69	85	69	64	80	65	61	75	62	57	71	59	53	68	56	47	65	53	58
			Exposed	88	81	76	88	77	72	88	73	68	85	70	65	82	67	63	79	65	60	76	63	58	72	59	53	68	55	46	64	52	56	61	59	52	59	56	43	56	53	38
		27-45	Interior	92	92	92	92	92	92	92	92	89	92	92	85	92	90	81	92	86	78	89	83	75	82	77	69	76	71	65	71	67	61	67	64	58	63	61	55	61	59	51
			Exposed	92	90	81	92	85	77	87	81	73	83	77	70	79	74	67	75	71	64	72	68	62	67	64	59	63	61	54	60	58	49	57	54	58	54	51	54	51	59	50
40	B	0-7	Interior	70	70	70	70	70	70	70	70	70	70	70	70	70	70	70	70	70	70	70	70	70	70	70	70	70	70	70	70	70	69	70	70	65	70	70	62	70	67	60
			Exposed	70	70	70	70	70	70	70	70	70	70	70	70	70	70	70	70	70	70	70	70	70	70	70	65	70	70	62	70	66	59	70	63	55	68	61	52	65	58	60
		7-20	Interior	72	72	72	72	72	72	72	72	72	72	72	72	72	72	72	72	72	72	72	72	72	72	72	72	72	72	69	72	71	65	72	67	62	72	64	60	71	61	57
			Exposed	72	72	72	72	72	72	72	72	72	72	72	72	72	72	72	72	72	69	72	72	66	72	67	62	72	63	59	70	60	56	66	57	52	64	54	59	61	51	57
		20-27	Interior	80	80	80	80	80	80	80	80	80	80	80	80	80	80	80	80	80	80	80	80	80	80	80	80	80	80	77	80	77	72	80	72	67	80	68	64	80	65	61
			Exposed	80	80	80	80	80	80	80	80	80	80	80	80	80	80	80	80	80	76	80	79	73	80	73	67	80	68	63	78	64	60	74	61	56	71	59	52	68	56	47
		27-45	Interior	86	86	86	86	86	86	86	86	86	86	86	86	86	86	86	86	86	86	86	86	86	86	86	86	86	86	82	85	85	77	82	80	72	80	75	68	76	72	65
			Exposed	86	86	86	86	86	86	86	86	86	86	86	86	86	86	85	86	86	81	86	86	78	86	80	72	80	75	68	74	70	64	70	66	61	66	63	58	63	61	54
	C	0-7	Interior	70	70	70	70	70	70	70	70	70	70	70	70	70	70	70	70	70	70	70	70	70	70	70	67	70	70	63	70	68	60	70	65	57	70	62	54	66	60	51
			Exposed	70	70	70	70	70	70	70	70	70	70	70	68	70	70	65	70	70	63	70	69	61	70	65	58	69	62	53	65	59	49	62	55	57	60	52	54	57	59	50
		7-20	Interior	72	72	72	72	72	72	72	72	72	72	72	72	72	72	72	72	72	71	72	72	68	72	69	64	72	65	61	72	62	58	68	59	54	65	56	51	62	52	59
			Exposed	72	72	72	72	72	70	72	72	67	72	70	64	72	67	62	72	64	60	72	62	59	68	59	54	65	55	50	62	51	57	59	59	54	56	55	50	52	52	45
		20-27	Interior	80	80	80	80	80	80	80	80	80	80	80	80	80	80	80	80	80	79	80	80	76	80	75	70	80	70	65	80	66	61	76	63	58	73	60	54	70	57	51
			Exposed	80	80	80	80	80	78	80	80	74	80	76	71	80	73	67	80	70	65	80	67	62	77	63	59	72	60	54	68	56	48	65	53	58	62	60	53	60	57	47
		27-45	Interior	86	86	86	86	86	86	86	86	86	86	86	86	86	86	86	86	86	84	86	86	81	84	83	75	81	77	70	77	72	66	72	68	62	68	65	59	65	62	56
			Exposed	86	86	86	86	86	83	86	86	79	86	84	76	86	80	72	82	77	69	79	74	67	73	69	63	67	64	59	64	61	55	61	59	51	58	55	59	55	52	56
	D	0-7	Interior	72	72	72	72	72	72	72	72	72	72	72	72	72	72	72	72	72	69	72	72	67	72	72	63	72	67	60	72	64	56	68	61	52	65	58	60	62	55	57
			Exposed	72	72	72	72	72	69	72	72	66	72	72	63	72	70	61	72	67	59	72	65	57	69	61	53	65	58	59	62	54	56	59	50	52	55	58	48	52	55	43
		7-20	Interior	75	75	75	75	75	75	75	75	75	75	75	72	75	75	69	75	72	66	75	69	64	75	64	60	71	61	57	67	58	53	64	54	60	61	51	57	59	59	54
			Exposed	75	75	68	75	71	65	75	67	63	75	65	61	73	63	59	71	61	56	68	59	54	64	54	49	61	50	56	58	58	53	54	54	48	51	51	42	59	45	38
		20-27	Interior	82	82	82	82	82	82	82	82	82	82	82	80	82	82	76	82	78	72	82	75	69	82	69	64	80	65	61	75	62	57	71	59	53	68	56	47	65	53	58
			Exposed	82	81	76	82	77	72	82	73	68	82	70	65	82	67	63	79	65	60	76	63	58	72	59	53	68	55	46	64	52	56	61	59	52	59	56	43	56	53	38
		27-45	Interior	88	88	88	88	88	88	88	88	88	88	88	85	88	88	81	88	86	78	86	83	75	82	77	69	76	71	65	71	67	61	67	64	58	63	61	55	61	59	51
			Exposed	88	88	81	88	85	77	87	81	73	83	77	70	79	74	67	75	71	64	72	68	62	67	64	59	63	61	54	60	58	49	57	54	58	54	51	54	51	59	50
50	B	0-7	Interior	63	63	63	63	63	63	63	63	63	63	63	63	63	63	63	63	63	63	63	63	63	63	63	63	63	63	63	63	63	63	63	63	63	63	63	62	63	63	60
			Exposed	63	63	63	63	63	63	63	63	63	63	63	63	63	63	63	63	63	63	63	63	63	63	63	63	63	63	62	63	63	59	63	63	55	63	61	52	63	58	60
		7-20	Interior	66	66	66	66	66	66	66	66	66	66	66	66	66	66	66	66	66	66	66	66	66	66	66	66	66	66	66	66	66	65	66	66	62	66	64	60	66	61	57
			Exposed	66	66	66	66	66	66	66	66	66	66	66	66	66	66	66	66	66	66	66	66	66	66	66	62	66	63	59	66	60	56	66	57	52	64	54	59	61	51	57
		20-27	Interior	74	74	74	74	74	74	74	74	74	74	74	74	74	74	74	74	74	74	74	74	74	74	74	74	74	74	74	74	74	72	74	72	67	74	68	64	74	65	61
			Exposed	74	74	74	74	74	74	74	74	74	74	74	74	74	74	74	74	74	74	74	74	73	74	73	67	74	68	63	74	64	60	74	61	56	71	59	52	68	56	47
		27-45	Interior	80	80	80	80	80	80	80	80	80	80	80	80	80	80	80	80	80	80	80	80	80	80	80	80	80	80	80	79	79	77	77	77	72	75	75	68	73	72	65
			Exposed	80	80	80	80	80	80	80	80	80	80	80	80	80	80	80	80	80	80	80	80	78	80	80	72	80	75	68	74	70	64	70	66	61	66	63	58	63	61	54
	C	0-7	Interior	63	63	63	63	63	63	63	63	63	63	63	63	63	63	63	63	63	63	63	63	63	63	63	63	63	63	63	63	63	60	63	63	57	63	62	54	63	60	51
			Exposed	63	63	63	63	63	63	63	63	63	63	63	63	63	63	63	63	63	63	63	63	61	63	63	58	63	62	53	63	59	49	62	55	57	60	52	54	57	59	50
		7-20	Interior	66	66	66	66	66	66	66	66	66	66	66	66	66	66	66	66	66	66	66	66	66	66	66	64	66	65	61	66	62	58	65	59	54	64	56	51	62	52	59
			Exposed	66	66	66	66	66	66	66	66	66	66	66	64	66	66	62	66	64	60	66	62	59	66	59	54	65	55	50	62	51	57	59	59	54	56	55	50	52	52	45
		20-27	Interior	74	74	74	74	74	74	74	74	74	74	74	74	74	74	74	74	74	74	74	74	74	74	74	70	74	70	65	74	66	61	73	63	58	72	60	54	70	57	51
			Exposed	74	74	74	74	74	74	74	74	74	74	74	71	74	73	67	74	70	65	74	67	62	74	63	59	72	60	54	68	56	48	65	53	58	62	60	53	60	57	47
		27-45	Interior	80	80	80	80	80	80	80	80	80	80	80	80	80	80	80	80	80	80	80	80	80	78	78	75	76	76	70	73	72	66	71	68	62	68	65	59	65	62	56
			Exposed	80	80	80	80	80	80	80	80	79	80	80	76	80	80	72	80	77	69	79	74	67	73	69	63	67	64	59	64	61	55	61	59	51	58	55	59	55	52	56
	D	0-7	Interior	66	66	66	66	66	66	66	66	66	66	66	66	66	66	66	66	66	66	66	66	66	66	66	60	66	66	60	66	64	56	66	61	52	65	58	60	62	55	57
			Exposed	66	66	66	66	66	66	66	66	66	66	66	63	66	66	61	66	66	59	66	65	57	66	61	53	65	58	59	62	54	56	59	50	52	55	58	48	52	55	43
		7-20	Interior	69	69	69	69	69	69	69	69	69	69	69	69	69	69	69	69	69	66	69	69	64	69	64	60	69	61	57	67	58	53	64	54	60	61	51	57	59	59	54
			Exposed	69	69	68	69	69	65	69	67	63	69	65	61	69	63	59	69	61	56	68	59	54	64	54	49	61	50	56	58	58	53	54	54	48	51	51	42	59	45	38
		20-27	Interior	77	77	77	77	77	77	77	77	77	77	77	77	77	77	76	77	77	72	77	75	69	77	69	64	77	65	61	75	62	57	71	59	53	68	56	47	65	53	58
			Exposed	77	77	76	77	77	72	77	73	68	77	70	65	77	67	63	77	65	60	76	63	58	72	59	53	68	55	46	64	52	56	61	59	52	59	56	43	56	53	38
		27-45	Interior	83	83	83	83	83	83	83	83	83	83	83	83	83	83	81	82	82	78	81	81	75	78	77	69	75	71	65	71	67	61	67	64	58	63	61	55	61	59	51
			Exposed	83	83	81	83	83	77	83	81	73	83	77	70	79	74	67	75	71	64	72	68	62	67	64	59	63	61	54	60	58	49	57	54	58	54	51	54	51	59	50

* Cells with an astrisks indicates that the L-foot must be oriented in the Y- direction as indicated in the image.

10 Highlighted cell indicate 3-rail system span. Contact Unirac Engineering Services for support.

~~10~~ Highlighted cell with strikethrough indicate 3-rail system span and module clamp allowable capacity exceeds with 3-rails. 4-Rail system required. Contact Unirac Engineering Services for support.

UNIRAC

ASCE 7-16	II	30 ft	Ss = 3.00	19 sq.ft	LANDSCAPE	CROSS-SLOPE	NXT	NXT COMBO	Stronghold BUTYL Rafter #14S
Design Standard	Risk Category	Roof Height	Seismic	Module Area	Orientation	Rail Direction	Rail Type	Clamp	Attachment

SPAN TABLES

Maximum Allowable Rail Spans for Rooftop Solar Panels Parallel to the Roof Surface (inches)

Ground Snow Load (psf)	Wind Exposure Category	Roof Tilt Angle (deg)	Panel Exposure	Basic Wind Speed (mph)																																								
				90			95			100			105			110			115			120			130			140			150			160			170			180		
				Roof Wind Zone																																								
				1	2	3	1	2	3	1	2	3	1	2	3	1	2	3	1	2	3	1	2	3	1	2	3	1	2	3	1	2	3	1	2	3	1	2	3	1	2	3
60	B	0-7	Interior	58	58	58	58	58	58	58	58	58	58	58	58	58	58	58	58	58	58	58	58	58	58	58	58	58	58	58	58	58	58	58	58	58	58	58	58	58	58	58	58	58
			Exposed	58	58	58	58	58	58	58	58	58	58	58	58	58	58	58	58	58	58	58	58	58	58	58	58	58	58	58	58	58	58	58	58	55	58	58	52	58	58	60
		7-20	Interior	60	60	60	60	60	60	60	60	60	60	60	60	60	60	60	60	60	60	60	60	60	60	60	60	60	60	60	60	60	60	60	60	60	60	60	60	60	60	57
			Exposed	60	60	60	60	60	60	60	60	60	60	60	60	60	60	60	60	60	60	60	60	60	60	60	60	60	60	59	60	60	56	60	57	52	60	54	59	60	51	57
		20-27	Interior	70	70	70	70	70	70	70	70	70	70	70	70	70	70	70	70	70	70	70	70	70	70	70	70	70	70	70	70	70	70	70	70	67	70	68	64	70	65	61
			Exposed	70	70	70	70	70	70	70	70	70	70	70	70	70	70	70	70	70	70	70	70	70	70	70	67	70	68	63	70	64	60	70	61	56	70	59	52	68	56	47
		27-45	Interior	76	76	76	76	76	76	76	76	76	76	76	76	76	76	76	76	76	76	76	76	76	76	76	76	76	76	76	74	74	74	73	73	72	71	71	68	69	69	65
			Exposed	76	76	76	76	76	76	76	76	76	76	76	76	76	76	76	76	76	76	76	76	76	76	76	72	76	75	68	74	70	64	70	66	61	66	63	58	63	61	54
	C	0-7	Interior	58	58	58	58	58	58	58	58	58	58	58	58	58	58	58	58	58	58	58	58	58	58	58	58	58	58	58	58	58	58	58	58	57	58	58	54	58	58	51
			Exposed	58	58	58	58	58	58	58	58	58	58	58	58	58	58	58	58	58	58	58	58	58	58	58	58	58	58	53	58	58	49	58	55	57	58	52	54	57	59	50
		7-20	Interior	60	60	60	60	60	60	60	60	60	60	60	60	60	60	60	60	60	60	60	60	60	60	60	60	60	60	60	60	60	58	60	59	54	60	56	51	59	52	59
			Exposed	60	60	60	60	60	60	60	60	60	60	60	60	60	60	60	60	60	60	60	60	59	60	59	54	60	55	50	60	51	57	59	59	54	56	55	50	52	52	45
		20-27	Interior	70	70	70	70	70	70	70	70	70	70	70	70	70	70	70	70	70	70	70	70	70	70	70	70	70	70	65	70	66	61	69	63	58	67	60	54	66	57	51
			Exposed	70	70	70	70	70	70	70	70	70	70	70	70	70	67	70	70	65	70	67	62	70	63	59	70	60	54	68	56	48	65	53	58	62	60	53	60	57	47
		27-45	Interior	76	76	76	76	76	76	76	76	76	76	76	76	76	76	76	76	76	76	76	76	76	74	74	74	72	72	70	69	69	66	67	67	62	65	65	59	63	62	56
			Exposed	76	76	76	76	76	76	76	76	76	76	76	76	76	72	76	76	69	76	74	67	73	69	63	67	64	59	64	61	55	61	59	51	58	55	59	55	52	56	
	D	0-7	Interior	61	61	61	61	61	61	61	61	61	61	61	61	61	61	61	61	61	61	61	61	61	61	61	61	61	61	60	61	61	56	61	61	52	61	58	60	61	55	57
			Exposed	61	61	61	61	61	61	61	61	61	61	61	61	61	61	61	61	59	61	61	57	61	61	53	61	58	59	61	54	56	59	50	52	55	58	48	52	55	43
		7-20	Interior	64	64	64	64	64	64	64	64	64	64	64	64	64	64	64	64	64	64	64	64	64	64	64	60	64	61	57	63	58	53	62	54	60	61	51	57	59	59	54
			Exposed	64	64	64	64	64	64	64	64	63	64	64	61	64	63	59	64	61	56	64	59	54	64	54	49	61	50	56	58	58	53	54	54	48	51	51	42	59	45	38
		20-27	Interior	72	72	72	72	72	72	72	72	72	72	72	72	72	72	72	72	72	72	72	72	69	72	69	64	72	65	61	71	62	57	69	59	53	68	56	47	65	53	58
			Exposed	72	72	72	72	72	72	72	72	68	72	70	65	72	67	63	72	65	60	72	63	58	72	59	53	68	55	46	64	52	56	61	59	52	59	56	43	56	53	38
		27-45	Interior	79	79	79	79	79	79	79	79	79	79	79	79	79	79	79	77	77	77	76	76	75	74	74	69	71	71	65	69	67	61	66	64	58	63	61	55	61	59	51
			Exposed	79	79	79	79	79	77	79	79	73	79	77	70	79	74	67	75	71	64	72	68	62	67	64	59	63	61	54	60	58	49	57	54	58	54	51	54	51	59	50
70	B	0-7	Interior	54	54	54	54	54	54	54	54	54	54	54	54	54	54	54	54	54	54	54	54	54	54	54	54	54	54	54	54	54	54	54	54	54	54	54	54	54	54	54
			Exposed	54	54	54	54	54	54	54	54	54	54	54	54	54	54	54	54	54	54	54	54	54	54	54	54	54	54	54	54	54	54	54	54	54	54	54	52	54	54	60
		7-20	Interior	56	56	56	56	56	56	56	56	56	56	56	56	56	56	56	56	56	56	56	56	56	56	56	56	56	56	56	56	56	56	56	56	56	56	56	56	56	56	56
			Exposed	56	56	56	56	56	56	56	56	56	56	56	56	56	56	56	56	56	56	56	56	56	56	56	56	56	56	56	56	56	56	56	56	52	56	54	59	56	51	57
		20-27	Interior	65	65	65	65	65	65	65	65	65	65	65	65	65	65	65	65	65	65	65	65	65	65	65	65	65	65	65	65	65	65	65	65	65	65	65	64	65	65	61
			Exposed	65	65	65	65	65	65	65	65	65	65	65	65	65	65	65	65	65	65	65	65	65	65	65	65	65	65	63	65	64	60	65	61	56	65	59	52	65	56	47
		27-45	Interior	72	72	72	72	72	72	72	72	72	72	72	72	72	72	72	72	72	72	72	72	72	72	72	72	72	72	72	70	70	70	69	69	69	67	67	67	66	66	65
			Exposed	72	72	72	72	72	72	72	72	72	72	72	72	72	72	72	72	72	72	72	72	72	72	72	72	72	72	68	70	70	64	69	66	61	66	63	58	63	61	54
	C	0-7	Interior	54	54	54	54	54	54	54	54	54	54	54	54	54	54	54	54	54	54	54	54	54	54	54	54	54	54	54	54	54	54	54	54	54	54	54	54	54	54	51
			Exposed	54	54	54	54	54	54	54	54	54	54	54	54	54	54	54	54	54	54	54	54	54	54	54	53	54	54	49	54	54	49	54	54	57	54	52	54	54	59	50
		7-20	Interior	56	56	56	56	56	56	56	56	56	56	56	56	56	56	56	56	56	56	56	56	56	56	56	56	56	56	56	56	56	56	56	56	54	56	56	51	56	52	59
			Exposed	56	56	56	56	56	56	56	56	56	56	56	56	56	56	56	56	56	56	56	56	56	56	56	54	56	55	50	56	51	57	56	59	54	56	55	50	52	52	45
		20-27	Interior	65	65	65	65	65	65	65	65	65	65	65	65	65	65	65	65	65	65	65	65	65	65	65	65	65	65	65	65	65	61	65	63	58	64	60	54	63	57	51
			Exposed	65	65	65	65	65	65	65	65	65	65	65	65	65	65	65	65	65	65	65	62	65	63	59	65	60	54	65	56	48	65	53	58	62	60	53	60	57	47
		27-45	Interior	72	72	72	72	72	72	72	72	72	72	72	72	72	72	72	72	72	72	72	72	72	70	70	70	68	68	68	66	66	66	64	64	62	63	63	59	61	61	56
			Exposed	72	72	72	72	72	72	72	72	72	72	72	72	72	72	72	72	72	69	72	72	67	70	69	63	67	64	59	64	61	55	61	59	51	58	55	59	55	52	56
	D	0-7	Interior	57	57	57	57	57	57	57	57	57	57	57	57	57	57	57	57	57	57	57	57	57	57	57	57	57	57	57	57	57	56	57	57	52	57	57	60	57	55	57
			Exposed	57	57	57	57	57	57	57	57	57	57	57	57	57	57	57	57	57	57	57	57	57	57	57	53	57	57	59	57	54	56	57	50	52	55	58	48	52	55	43
		7-20	Interior	59	59	59	59	59	59	59	59	59	59	59	59	59	59	59	59	59	59	59	59	59	59	59	59	59	59	57	59	58	53	59	54	60	58	51	57	57	59	54
			Exposed	59	59	59	59	59	59	59	59	59	59	59	59	59	59	59	59	59	56	59	59	54	59	54	49	59	50	56	58	58	53	54	54	48	51	51	42	59	45	38
		20-27	Interior	69	69	69	69	69	69	69	69	69	69	69	69	69	69	69	69	69	69	69	69	69	69	69	64	68	65	61	67	62	57	66	59	53	64	56	47	63	53	58
			Exposed	69	69	69	69	69	69	69	69	68	69	69	65	69	67	63	69	65	60	69	63	58	69	59	53	68	55	46	64	52	56	61	59	52	59	56	43	56	53	38
		27-45	Interior	75	75	75	75	75	75	75	75	75	75	75	75	74	74	74	73	73	73	72	72	72	70	70	69	68	68	65	66	66	61	64	64	58	62	61	55	60	59	51
			Exposed	75	75	75	75	75	75	75	75	73	75	75	70	74	74	67	73	71	64	72	68	62	67	64	59	63	61	54	60	58	49	57	54	58	54	51	54	51	59	50
80	B	0-7	Interior	51	51	51	51	51	51	51	51	51	51	51	51	51	51	51	51	51	51	51	51	51	51	51	51	51	51	51	51	51	51	51	51	51	51	51	51	51	51	51
			Exposed	51	51	51	51	51	51	51	51	51	51	51	51	51	51	51	51	51	51	51	51	51	51	51	51	51	51	51	51	51	51	51	51	51	51	51	51	51	51	60
		7-20	Interior	53	53	53	53	53	53	53	53	53	53	53	53	53	53	53	53	53	53	53	53	53	53	53	53	53	53	53	53	53	53	53	53	53	53	53	53	53	53	53
			Exposed	53	53	53	53	53	53	53	53	53	53	53	53	53	53	53	53	53	53	53	53	53	53	53	53	53	53	53	53	53	53	53	53	52	53	53	59	53	51	57
		20-27	Interior	61	61	61	61	61	61	61	61	61	61	61	61	61	61	61	61	61	61	61	61	61	61	61	61	61	61	61	61	61	61	61	61	61	61	61	61	61	61	61
			Exposed	61	61	61	61	61	61	61	61	61	61	61	61	61	61	61	61	61	61	61	61	61	61	61	61	61	61	61	61	61	60	61	61	56	61	59	52	61	56	47
		27-45	Interior	86*	86*	86*	86*	86*	86*	86*	86*	86*	86*	86*	86*	86*	86*	86*	86*	86*	86*	86*	86*	86*	86*	86*	86*	86*	86*	68	67	67	67	66	66	66	64	64	64	63	63	63
			Exposed	86*	86*	86*	86*	86*	86*	86*	86*	86*	86*	86*	86*	86*	86*	69	86*	86*	69	86*	86*	69	86*	69	69	68	68	68	67	67	64	66	66	61	64	63	58	63	61	54
	C	0-7	Interior	51	51	51	51	51	51	51	51	51	51	51	51	51	51	51	51	51	51	51	51	51	51	51	51	51	51	51	51	51	51	51	51	51	51	51	51	51	51	51
			Exposed	51	51	51	51	51	51	51	51	51	51	51	51	51	51	51	51	51	51	51	51	51	51	51	51	51	51	49	51	51	57	51	51	57	51	51	54	51	59	50
		7-20	Interior	53	53	53	53	53	53	53	53	53	53	53	53	53	53	53	53	53	53	53	53	53	53	53	53	53	53	53	53	53	53	53	53	53	53	53	51	53	52	59
			Exposed	53	53	53	53	53	53	53	53	53	53	53	53	53	53	53	53	53	53	53	53	53	53	53	53	53	53	50	53	51	57	53	59	54	53	55	50	52	52	45
		20-27	Interior	61	61	61	61	61	61	61	61	61	61	61	61	61	61	61	61	61	61	61	61	61	61	61	61	61	61	61	61	61	61	61	61	58	61	60	54	60	57	51
			Exposed	61	61	61	61	61	61	61	61	61	61	61	61	61	61	61	61	61	61	61	61	61	61	61	59	61	60	54	61	56	48	61	53	58	61	60	53	60	57	47
		27-45	Interior	86*	86*	86*	86*	86*	86*	86*	86*	86*	86*	86*	86*	86*	86*	86*	86*	86*	69	86*	86*	68	67	67	67	65	65	65	63	63	63	62	62	62	61	61	59	59	59	56
			Exposed	86*	86*	86*	86*	86*	69	86*	86*	69	86*	69	69	86*	69	69	69	69	69	68	68	67	67	67	63	65	64	59	63	61	55	61	59	51	58	55	59	55	52	56
	D	0-7	Interior	53	53	53	53	53	53	53	53	53	53	53	53	53	53	53	53	53	53	53	53	53	53	53	53	53	53	53	53	53	53	53	53	52	53	53	60	53	53	57
			Exposed	53	53	53	53	53	53	53	53	53	53	53	53	53	53	53	53	53	53	53	53	53	53	53	59	53	53	56	53	53	50	52	53	58	48	52	55	43		
		7-20	Interior	55	55	55	55	55	55	55	55	55	55	55	55	55	55	55	55	55	55	55	55	55	55	55	55	55	55	53	55	54	60	55	51	57	54	59	54			
			Exposed	55	55	55	55	55	55	55	55	55	55	55	55	55	55	55	55	55	55	55	55	54	55	54	49	55	50	56	55	58	53	54	54	48	51	51	42	59	45	38
		20-27	Interior	64	64	64	64	64	64	64	64	64	64	64	64	64	64	64	64	64	64	64	64	64	64	64	64	64	64	61	64	62	57	63	59	53	61	56	47	60	53	58
			Exposed	64	64	64	64	64	64	64	64	64	64	64	64	64	64	63	64	64	60	64	63	58	64	59	53	64	55	46	64	52	56	61	59	52	59	56	43	56	53	38
		27-45	Interior	72	72	72	72	72	72	72	72	72	72	72	71	71	71	70	70	70	69	69	69	67	67	67	65	65	65	63	63	63	61	62	62	58	60	60	55	58	58	51
			Exposed	72	72	72	72	72	72	72	72	72	72	72	70	71	71	67	70	70	64	69	68	62	67	64	59	63	61	54	60	58	49	57	54	58	54	51	54	51	59	50

* Cells with an astrisks indicates that the L-foot must be oriented in the Y- direction as indicated in the image.

10 Highlighted cell indicate 3-rail system span. Contact Unirac Engineering Services for support.

~~10~~ Highlighted cell with strikethrough indicate 3-rail system span and module clamp allowable capacity exceeds with 3-rails. 4-Rail system required. Contact Unirac Engineering Services for support.

UNIRAC

ASCE 7-16	II	30 ft	Ss = 3.00	19 sq.ft	LANDSCAPE	CROSS-SLOPE	NXT	NXT COMBO	Stronghold BUTYL Rafter #14S
Design Standard	Risk Category	Roof Height	Seismic	Module Area	Orientation	Rail Direction	Rail Type	Clamp	Attachment

SPAN TABLES

Maximum Allowable Rail Spans for Rooftop Solar Panels Parallel to the Roof Surface (inches)

Ground Snow Load (psf)	Wind Exposure Category	Roof Tilt Angle (deg)	Panel Exposure	Basic Wind Speed (mph)																																								
				90			95			100			105			110			115			120			130			140			150			160			170			180		
				Roof Wind Zone																																								
				1	2	3	1	2	3	1	2	3	1	2	3	1	2	3	1	2	3	1	2	3	1	2	3	1	2	3	1	2	3	1	2	3	1	2	3	1	2	3
90	B	0-7	Interior	48	48	48	48	48	48	48	48	48	48	48	48	48	48	48	48	48	48	48	48	48	48	48	48	48	48	48	48	48	48	48	48	48	48	48	48	48	48	48	48	48
			Exposed	48	48	48	48	48	48	48	48	48	48	48	48	48	48	48	48	48	48	48	48	48	48	48	48	48	48	48	48	48	48	48	48	48	48	48	48	48	48	48	48	59
		7-20	Interior	50	50	50	50	50	50	50	50	50	50	50	50	50	50	50	50	50	50	50	50	50	50	50	50	50	50	50	50	50	50	50	50	50	50	50	50	50	50	50	50	50
			Exposed	50	50	50	50	50	50	50	50	50	50	50	50	50	50	50	50	50	50	50	50	50	50	50	50	50	50	50	50	50	50	50	50	50	50	50	59	50	50	57		
		20-27	Interior	58	58	58	58	58	58	58	58	58	58	58	58	58	58	58	58	58	58	58	58	58	58	58	58	58	58	58	58	58	58	58	58	58	58	58	58	58	58	58	58	58
			Exposed	58	58	58	58	58	58	58	58	58	58	58	58	58	58	58	58	58	58	58	58	58	58	58	58	58	58	58	58	58	58	58	58	56	58	58	52	58	56	47		
		27-45	Interior	73*	73*	73*	73*	73*	73*	73*	73*	73*	73*	73*	73*	73*	73*	73*	73*	73*	73*	73*	73*	73*	73*	73*	73*	72*	72*	72*	71*	71*	71*	73*	73*	72*	74*	74*	62	61	61	61		
			Exposed	73*	73*	73*	73*	73*	73*	73*	73*	73*	73*	73*	73*	73*	73*	73*	73*	73*	73*	73*	73*	73*	73*	73*	73*	72*	72*	65	71*	64	64	63	63	61	62	62	58	61	61	54		
	C	0-7	Interior	48	48	48	48	48	48	48	48	48	48	48	48	48	48	48	48	48	48	48	48	48	48	48	48	48	48	48	48	48	48	48	48	48	48	48	48	48	48	48	48	48
			Exposed	48	48	48	48	48	48	48	48	48	48	48	48	48	48	48	48	48	48	48	48	48	48	48	48	48	48	48	48	48	48	48	48	57	48	48	54	48	59	50		
		7-20	Interior	50	50	50	50	50	50	50	50	50	50	50	50	50	50	50	50	50	50	50	50	50	50	50	50	50	50	50	50	50	50	50	50	50	50	50	50	50	50	59		
			Exposed	50	50	50	50	50	50	50	50	50	50	50	50	50	50	50	50	50	50	50	50	50	50	50	50	50	50	50	50	50	57	50	59	54	50	55	50	50	52	45		
		20-27	Interior	58	58	58	58	58	58	58	58	58	58	58	58	58	58	58	58	58	58	58	58	58	58	58	58	58	58	58	58	58	58	58	58	58	58	58	54	57	57	51		
			Exposed	58	58	58	58	58	58	58	58	58	58	58	58	58	58	58	58	58	58	58	58	58	58	58	58	58	58	54	58	56	48	58	53	58	58	60	53	57	57	47		
		27-45	Interior	73*	73*	73*	73*	73*	73*	73*	73*	73*	73*	73*	73*	73*	73*	73*	73*	73*	73*	72*	72*	72*	74*	74*	74*	72*	72*	63	61	61	61	60	60	60	59	59	59	57	57	56		
			Exposed	73*	73*	73*	73*	73*	73*	73*	73*	73*	73*	73*	73*	73*	73*	72*	73*	73*	65	72*	72*	65	73*	64	63	63	63	59	61	61	55	60	59	51	58	55	59	55	52	56		
	D	0-7	Interior	50	50	50	50	50	50	50	50	50	50	50	50	50	50	50	50	50	50	50	50	50	50	50	50	50	50	50	50	50	50	50	50	50	50	50	60	50	50	57		
			Exposed	50	50	50	50	50	50	50	50	50	50	50	50	50	50	50	50	50	50	50	50	50	50	50	50	50	50	59	50	50	56	50	50	52	50	58	48	50	55	43		
		7-20	Interior	52	52	52	52	52	52	52	52	52	52	52	52	52	52	52	52	52	52	52	52	52	52	52	52	52	52	52	52	52	52	52	52	60	52	51	57	52	59	54		
			Exposed	52	52	52	52	52	52	52	52	52	52	52	52	52	52	52	52	52	52	52	52	52	52	52	49	52	50	56	52	58	53	52	54	48	51	51	42	59	45	38		
		20-27	Interior	61	61	61	61	61	61	61	61	61	61	61	61	61	61	61	61	61	61	61	61	61	61	61	61	61	61	61	61	61	57	60	59	53	59	56	47	58	53	58		
			Exposed	61	61	61	61	61	61	61	61	61	61	61	61	61	61	61	61	61	60	61	61	58	61	59	53	61	55	46	61	52	56	60	59	52	59	56	43	56	53	38		
		27-45	Interior	79*	79*	79*	79*	79*	79*	79*	79*	79*	79*	79*	79*	79*	79*	79*	85*	85*	67	66	66	66	64	64	64	63	63	63	61	61	61	60	60	58	58	58	55	57	57	51		
			Exposed	79*	79*	79*	79*	79*	68	79*	79*	68	79*	68	68	79*	68	67	67	67	64	66	66	62	64	64	59	63	61	54	60	58	49	57	54	58	54	51	54	51	59	50		
100	B	0-7	Interior	45	45	45	45	45	45	45	45	45	45	45	45	45	45	45	45	45	45	45	45	45	45	45	45	45	45	45	45	45	45	45	45	45	45	45	45	45	45	45	45	45
			Exposed	45	45	45	45	45	45	45	45	45	45	45	45	45	45	45	45	45	45	45	45	45	45	45	45	45	45	45	45	45	45	45	45	45	45	45	45	45	45	56		
		7-20	Interior	47	47	47	47	47	47	47	47	47	47	47	47	47	47	47	47	47	47	47	47	47	47	47	47	47	47	47	47	47	47	47	47	47	47	47	47	47	47	47		
			Exposed	47	47	47	47	47	47	47	47	47	47	47	47	47	47	47	47	47	47	47	47	47	47	47	47	47	47	47	47	47	47	47	47	47	47	47	58	47	47	57		
		20-27	Interior	55	55	55	55	55	55	55	55	55	55	55	55	55	55	55	55	55	55	55	55	55	55	55	55	55	55	55	55	55	55	55	55	55	55	55	55	55	55	55		
			Exposed	55	55	55	55	55	55	55	55	55	55	55	55	55	55	55	55	55	55	55	55	55	55	55	55	55	55	55	55	55	55	55	55	55	55	55	52	55	55	47		
		27-45	Interior	66*	66*	66*	66*	66*	66*	66*	66*	66*	66*	66*	66*	66*	66*	66*	66*	66*	66*	66*	66*	66*	66*	66*	66*	66*	66*	66*	65*	65*	65*	64*	64*	64*	65*	65*	65*	64*	64*	64*		
			Exposed	66*	66*	66*	66*	66*	66*	66*	66*	66*	66*	66*	66*	66*	66*	66*	66*	66*	66*	66*	66*	66*	66*	66*	66*	66*	66*	66*	65*	65*	64*	64*	64*	61	65*	60	58	59	59	54		
	C	0-7	Interior	45	45	45	45	45	45	45	45	45	45	45	45	45	45	45	45	45	45	45	45	45	45	45	45	45	45	45	45	45	45	45	45	45	45	45	45	45	45	45		
			Exposed	45	45	45	45	45	45	45	45	45	45	45	45	45	45	45	45	45	45	45	45	45	45	45	45	45	45	45	45	45	45	45	45	56	45	45	54	45	56	50		
		7-20	Interior	47	47	47	47	47	47	47	47	47	47	47	47	47	47	47	47	47	47	47	47	47	47	47	47	47	47	47	47	47	47	47	47	47	47	47	47	47	47	58		
			Exposed	47	47	47	47	47	47	47	47	47	47	47	47	47	47	47	47	47	47	47	47	47	47	47	47	47	47	47	47	47	57	47	58	54	47	55	50	47	52	45		
		20-27	Interior	55	55	55	55	55	55	55	55	55	55	55	55	55	55	55	55	55	55	55	55	55	55	55	55	55	55	55	55	55	55	55	55	55	55	55	54	55	55	51		
			Exposed	55	55	55	55	55	55	55	55	55	55	55	55	55	55	55	55	55	55	55	55	55	55	55	55	55	55	54	55	55	48	55	53	58	55	60	53	55	57	47		
		27-45	Interior	66*	66*	66*	66*	66*	66*	66*	66*	66*	66*	66*	66*	66*	66*	66*	66*	66*	66*	66*	66*	66*	64*	64*	64*	66*	66*	66*	64*	64*	64*	68*	68*	58	57	57	57	56	56	56		
			Exposed	66*	66*	66*	66*	66*	66*	66*	66*	66*	66*	66*	66*	66*	66*	66*	66*	66*	66*	66*	66*	66*	64*	59	55	58	58	51	57	55	59	55	52	56								
	D	0-7	Interior	48	48	48	48	48	48	48	48	48	48	48	48	48	48	48	48	48	48	48	48	48	48	48	48	48	48	48	48	48	48	48	48	48	48	48	59	48	48	57		
			Exposed	48	48	48	48	48	48	48	48	48	48	48	48	48	48	48	48	48	48	48	48	48	48	48	59	48	48	56	48	48	52	48	58	48	48	55	43					
		7-20	Interior	50	50	50	50	50	50	50	50	50	50	50	50	50	50	50	50	50	50	50	50	50	50	50	50	50	50	50	50	50	50	50	50	60	50	50	57	50	59	54		
			Exposed	50	50	50	50	50	50	50	50	50	50	50	50	50	50	50	50	50	50	50	50	50	50	50	56	50	58	53	50	54	48	50	51	42	59	45	38					
		20-27	Interior	58	58	58	58	58	58	58	58	58	58	58	58	58	58	58	58	58	58	58	58	58	58	58	58	58	58	58	58	58	57	58	58	53	57	56	47	56	53	58		
			Exposed	58	58	58	58	58	58	58	58	58	58	58	58	58	58	58	58	58	58	58	58	58	58	55	46	58	52	56	58	59	52	57	56	43	56	53	38					
		27-45	Interior	73*	73*	73*	73*	73*	73*	73*	73*	73*	73*	72*	72*	72*	71*	71*	71*	74*	74*	74*	75*	75*	62	61	61	61	59	59	59	58	58	58	57	57	55	55	55	51				
			Exposed	73*	73*	73*	73*	73*	73*	73*	73*	73*	65	72*	72*	65	71*	71*	64	72*	64	62	62	62	59	61	61	54	59	58	49	57	54	58	54	51	54	51	59	50				

* Cells with an astrisks indicates that the L-foot must be oriented in the Y- direction as indicated in the image.

10 Highlighted cell indicate 3-rail system span. Contact Unirac Engineering Services for support.

~~10~~ Highlighted cell with strikethrough indicate 3-rail system span and module clamp allowable capacity exceeds with 3-rails. 4-Rail system required. Contact Unirac Engineering Services for support.

UNIRAC

ASCE 7-16	II	30 ft	Ss = 3.00	23 sq.ft	PORTRAIT	CROSS-SLOPE	NXT	NXT COMBO	Stronghold BUTYL Rafter #14S
Design Standard	Risk Category	Roof Height	Seismic	Module Area	Orientation	Rail Direction	Rail Type	Clamp	Attachment

SPAN TABLES

Maximum Allowable Rail Spans for Rooftop Solar Panels Parallel to the Roof Surface (inches)

Ground Snow Load (psf)	Wind Exposure Category	Roof Tilt Angle (deg)	Panel Exposure	Basic Wind Speed (mph)																																		
				90			95			100			105			110			115			120			130			140			150			160			170			180		
				Roof Wind Zone																																						
				1	2	3	1	2	3	1	2	3	1	2	3	1	2	3	1	2	3	1	2	3	1	2	3	1	2	3	1	2	3	1	2	3	1	2	3	1	2	3
0	B	0-7	Interior	79	79	79	79	79	79	79	79	79	79	79	76	79	79	73	79	79	70	79	77	68	79	72	64	77	68	60	73	64	56	69	61	51	65	58	43	63	54	36
			Exposed	79	79	73	79	79	70	79	76	67	79	73	64	79	70	62	76	67	60	74	65	57	69	61	52	65	57	42	62	52	34	58	45	30	54	38	40	50	33	35
		7-20	Interior	79	79	79	79	79	79	79	79	77	79	79	74	79	77	71	79	74	68	79	71	66	74	66	62	70	62	58	66	59	52	63	54	44	60	49	36	57	40	32
			Exposed	79	77	71	79	73	68	79	70	65	75	67	62	72	64	60	69	62	57	67	60	54	63	55	45	60	48	35	55	37	30	51	32	40	45	43	35	39	38	31
		20-27	Interior	79	79	79	79	79	79	79	79	79	79	79	79	79	79	78	79	79	75	79	76	72	79	71	68	78	67	63	74	63	60	70	60	55	67	56	51	64	52	42
			Exposed	79	79	78	79	78	74	79	75	71	79	72	68	79	69	65	78	67	63	75	64	61	70	60	56	66	56	50	63	51	39	60	41	32	57	34	27	53	30	35
		27-45	Interior	80	80	80	80	80	80	80	80	80	80	80	80	80	80	80	80	80	78	80	80	75	80	77	71	78	72	66	73	68	63	69	65	60	66	62	56	63	59	52
			Exposed	80	80	80	80	80	77	80	80	74	80	78	71	80	75	68	78	72	66	75	70	64	70	65	60	65	61	55	62	58	50	59	53	40	54	47	34	49	39	29
	C	0-7	Interior	79	79	75	79	79	72	79	78	69	79	75	66	79	72	63	79	69	61	76	67	59	71	63	54	67	59	47	63	55	37	60	50	32	56	42	43	53	36	38
			Exposed	79	72	63	78	69	61	75	66	58	72	63	55	69	61	51	66	59	46	64	56	40	60	51	33	56	41	42	51	34	36	43	30	32	36	40	~~28~~	32	35	~~25~~
		7-20	Interior	79	79	73	79	75	70	79	72	67	78	69	64	74	66	62	71	64	59	69	62	56	65	57	51	61	52	39	58	42	33	54	34	28	49	30	38	42	41	34
			Exposed	74	66	61	70	63	59	68	61	55	65	58	51	63	54	45	61	51	38	59	45	34	54	35	29	48	30	37	40	39	32	34	34	~~28~~	30	30	~~25~~	41	~~27~~	~~22~~
		20-27	Interior	79	79	79	79	79	77	79	77	73	79	74	70	79	71	67	79	69	65	77	66	63	72	62	58	68	58	53	65	53	44	61	46	35	59	37	29	55	32	38
			Exposed	79	71	67	79	68	64	76	65	62	73	62	59	70	60	56	68	58	52	66	54	47	62	47	35	58	36	29	54	31	36	49	41	30	42	36	~~26~~	36	32	~~22~~
		27-45	Interior	80	80	80	80	80	80	80	80	76	80	80	73	80	77	70	80	74	68	77	72	66	72	67	61	67	63	58	64	60	53	60	56	45	56	51	37	52	44	32
			Exposed	80	77	70	79	73	67	76	70	64	72	68	62	70	65	60	67	63	57	65	61	54	60	56	46	56	51	36	51	41	30	40	34	39	34	30	33	30	40	29
	D	0-7	Interior	79	79	70	79	76	67	79	72	64	79	70	62	76	67	59	73	65	56	71	63	53	66	59	45	62	54	36	59	47	31	55	39	41	51	34	36	43	30	32
			Exposed	76	67	59	73	64	56	70	62	52	67	59	47	64	56	40	62	53	35	60	50	32	55	40	41	50	33	35	41	43	31	34	38	~~27~~	30	33	~~24~~	40	~~30~~	~~21~~
		7-20	Interior	79	73	68	79	70	65	75	67	62	71	64	60	69	62	57	67	60	53	64	57	50	61	51	38	57	40	32	52	33	41	46	29	36	40	38	32	34	34	~~28~~
			Exposed	69	62	57	66	59	53	63	55	47	61	52	39	59	46	34	56	39	31	54	34	29	47	29	36	39	38	31	33	33	~~27~~	44	~~29~~	~~24~~	38	~~25~~	~~21~~	34	~~22~~	~~19~~
		20-27	Interior	79	79	75	79	75	71	79	72	68	79	69	65	77	66	63	75	64	60	72	62	58	68	57	52	64	52	41	61	43	33	57	35	28	53	31	36	49	41	31
			Exposed	77	66	63	74	63	60	71	61	57	68	58	53	66	55	48	64	52	41	62	46	35	58	35	28	53	30	35	47	39	29	40	35	~~24~~	34	31	~~21~~	30	~~27~~	~~19~~
		27-45	Interior	80	80	78	80	80	74	80	78	71	80	75	68	77	72	66	74	69	63	71	67	61	67	63	57	63	59	52	59	54	42	55	49	35	50	40	30	40	34	39
			Exposed	77	72	66	73	69	63	70	66	60	67	63	58	65	61	54	62	59	51	60	56	45	55	50	35	48	39	29	37	33	37	32	29	32	43	38	~~27~~	38	34	~~24~~
10	B	0-7	Interior	66	66	66	66	66	66	66	66	66	66	66	66	66	66	66	66	66	66	66	66	66	66	66	64	66	66	60	66	64	56	66	61	51	65	58	43	63	54	36
			Exposed	66	66	66	66	66	66	66	66	66	66	66	64	66	66	62	66	66	60	66	65	57	66	61	52	65	57	42	62	52	34	58	45	30	54	38	40	50	33	35
		7-20	Interior	66	66	66	66	66	66	66	66	66	66	66	66	66	66	66	66	66	66	66	66	66	66	66	62	66	62	58	66	59	52	63	54	44	60	49	36	57	40	32
			Exposed	66	66	66	66	66	66	66	66	65	66	66	62	66	64	60	66	62	57	66	60	54	63	55	45	60	48	35	55	37	30	51	32	40	45	43	35	39	38	31
		20-27	Interior	76	76	76	76	76	76	76	76	76	76	76	76	76	76	76	76	76	75	76	76	72	76	71	68	76	67	63	74	63	60	70	60	55	67	56	51	64	52	42
			Exposed	76	76	76	76	76	74	76	75	71	76	72	68	76	69	65	76	67	63	75	64	61	70	60	56	66	56	50	63	51	39	60	41	32	57	34	27	53	30	35
		27-45	Interior	79	79	79	79	79	79	79	79	79	79	79	79	79	79	79	79	79	78	79	79	75	79	77	71	78	72	66	73	68	63	69	65	60	66	62	56	63	59	52
			Exposed	79	79	79	79	79	77	79	79	74	79	78	71	79	75	68	78	72	66	75	70	64	70	65	60	65	61	55	62	58	50	59	53	40	54	47	34	49	39	29
	C	0-7	Interior	66	66	66	66	66	66	66	66	66	66	66	66	66	66	63	66	66	61	66	66	59	66	63	54	66	59	47	63	55	37	60	50	32	56	42	43	53	36	38
			Exposed	66	66	63	66	66	61	66	66	58	66	63	55	66	61	51	66	59	46	64	56	40	60	51	33	56	41	42	51	34	36	43	30	32	36	40	~~28~~	32	35	~~25~~
		7-20	Interior	66	66	66	66	66	66	66	66	66	66	66	64	66	66	62	66	64	59	66	62	56	65	57	51	61	52	39	58	42	33	54	34	28	49	30	38	42	41	34
			Exposed	66	66	61	66	63	59	66	61	55	65	58	51	63	54	45	61	51	38	59	45	34	54	35	29	48	30	37	40	39	32	34	34	~~28~~	30	30	~~25~~	41	~~27~~	~~22~~
		20-27	Interior	76	76	76	76	76	76	76	76	73	76	74	70	76	71	67	76	69	65	76	66	63	72	62	58	68	58	53	65	53	44	61	46	35	59	37	29	55	32	38
			Exposed	76	71	67	76	68	64	76	65	62	73	62	59	70	60	56	68	58	52	66	54	47	62	47	35	58	36	29	54	31	36	49	41	30	42	36	~~26~~	36	32	~~22~~
		27-45	Interior	79	79	79	79	79	79	79	79	76	79	79	73	79	77	70	79	74	68	77	72	66	72	67	61	67	63	58	64	60	53	60	56	45	56	51	37	52	44	32
			Exposed	79	77	70	79	73	67	76	70	64	72	68	62	70	65	60	67	63	57	65	61	54	60	56	46	56	51	36	51	41	30	40	34	39	34	30	33	30	40	29
	D	0-7	Interior	66	66	66	66	66	66	66	66	64	66	66	62	66	66	59	66	65	56	66	63	53	66	59	45	62	54	36	59	47	31	55	39	41	51	34	36	43	30	32
			Exposed	66	66	59	66	64	56	66	62	52	66	59	47	64	56	40	62	53	35	60	50	32	55	40	41	50	33	35	41	43	31	34	38	~~27~~	30	33	~~24~~	40	~~30~~	~~21~~
		7-20	Interior	66	66	66	66	66	65	66	66	62	66	64	60	66	62	57	66	60	53	64	57	50	61	51	38	57	40	32	52	33	41	46	29	36	40	38	32	34	34	~~28~~
			Exposed	66	62	57	66	59	53	63	55	47	61	52	39	59	46	34	56	39	31	54	34	29	47	29	36	39	38	31	33	33	~~27~~	44	~~29~~	~~24~~	38	~~25~~	~~21~~	34	~~22~~	~~19~~
		20-27	Interior	77	77	75	77	75	71	77	72	68	77	69	65	77	66	63	75	64	60	72	62	58	68	57	52	64	52	41	61	43	33	57	35	28	53	31	36	49	41	31
			Exposed	77	66	63	74	63	60	71	61	57	68	58	53	66	55	48	64	52	41	62	46	35	58	35	28	53	30	35	47	39	29	40	35	~~24~~	34	31	~~21~~	30	~~27~~	~~19~~
		27-45	Interior	80	80	78	80	80	74	80	78	71	80	75	68	77	72	66	74	69	63	71	67	61	67	63	57	63	59	52	59	54	42	55	49	35	50	40	30	40	34	39
			Exposed	77	72	66	73	69	63	70	66	60	67	63	58	65	61	54	62	59	51	60	56	45	55	50	35	48	39	29	37	33	37	32	29	32	43	38	~~27~~	38	34	~~24~~
20	B	0-7	Interior	55	55	55	55	55	55	55	55	55	55	55	55	55	55	55	55	55	55	55	55	55	55	55	55	55	55	55	55	55	55	55	55	51	55	55	43	55	54	36
			Exposed	55	55	55	55	55	55	55	55	55	55	55	55	55	55	55	55	55	55	55	55	55	55	55	52	55	55	42	55	52	34	55	45	30	54	38	40	50	33	35
		7-20	Interior	55	55	55	55	55	55	55	55	55	55	55	55	55	55	55	55	55	55	55	55	55	55	55	55	55	55	55	55	55	52	55	54	44	55	49	36	55	40	32
			Exposed	55	55	55	55	55	55	55	55	55	55	55	55	55	55	55	55	55	55	55	55	54	55	55	45	55	48	35	55	37	30	51	32	40	45	43	35	39	38	31
		20-27	Interior	67	67	67	67	67	67	67	67	67	67	67	67	67	67	67	67	67	67	67	67	67	67	67	67	67	67	63	67	63	60	67	60	55	67	56	51	64	52	42
			Exposed	67	67	67	67	67	67	67	67	67	67	67	67	67	67	65	67	67	63	67	64	61	67	60	56	66	56	50	63	51	39	60	41	32	57	34	27	53	30	35
		27-45	Interior	71	71	71	71	71	71	71	71	71	71	71	71	71	71	71	71	71	71	71	71	71	71	71	71	71	71	66	71	68	63	69	65	60	66	62	56	63	59	52
			Exposed	71	71	71	71	71	71	71	71	71	71	71	71	71	71	68	71	71	66	71	70	64	70	65	60	65	61	55	62	58	50	59	53	40	54	47	34	49	39	29
	C	0-7	Interior	55	55	55	55	55	55	55	55	55	55	55	55	55	55	55	55	55	55	55	55	55	55	55	54	55	55	47	55	55	37	55	50	32	55	42	43	53	36	38
			Exposed	55	55	55	55	55	55	55	55	55	55	55	55	55	55	51	55	55	46	55	55	40	55	51	33	55	41	42	51	34	36	43	30	32	36	40	~~28~~	32	35	~~25~~
		7-20	Interior	55	55	55	55	55	55	55	55	55	55	55	55	55	55	55	55	55	55	55	55	55	55	55	51	55	52	39	55	42	33	54	34	28	49	30	38	42	41	34
			Exposed	55	55	55	55	55	55	55	55	55	55	55	51	55	54	45	55	51	38	55	45	34	54	35	29	48	30	37	40	39	32	34	34	~~28~~	30	30	~~25~~	41	~~27~~	~~22~~
		20-27	Interior	67	67	67	67	67	67	67	67	67	67	67	67	67	67	67	67	67	65	67	66	63	67	62	58	67	58	53	65	53	44	61	46	35	59	37	29	55	32	38
			Exposed	67	67	67	67	67	64	67	65	62	67	62	59	67	60	56	67	58	52	66	54	47	62	47	35	58	36	29	54	31	36	49	41	30	42	36	~~26~~	36	32	~~22~~
		27-45	Interior	71	71	71	71	71	71	71	71	71	71	71	71	71	71	70	71	71	68	71	71	66	70	67	61	67	63	58	64	60	53	60	56	45	56	51	37	52	44	32
			Exposed	71	71	70	71	71	67	71	70	64	71	68	62	70	65	60	67	63	57	65	61	54	60	56	46	56	51	36	51	41	30	40	34	39	34	30	33	30	40	29
	D	0-7	Interior	55	55	55	55	55	55	55	55	55	55	55	55	55	55	55	55	55	55	55	55	53	55	55	45	55	54	36	55	47	31	55	39	41	51	34	36	43	30	32
			Exposed	55	55	55	55	55	55	55	55	52	55	55	47	55	55	40	55	53	35	55	50	32	55	40	41	50	33	35	41	43	31	34	38	~~27~~	30	33	~~24~~	40	~~30~~	~~21~~
		7-20	Interior	55	55	55	55	55	55	55	55	55	55	55	55	55	55	55	55	55	53	55	55	50	55	51	38	55	40	32	52	33	41	46	29	36	40	38	32	34	34	~~28~~
			Exposed	55	55	55	55	55	53	55	55	47	55	52	39	55	46	34	55	39	31	54	34	29	47	29	36	39	38	31	33	33	~~27~~	44	~~29~~	~~24~~	38	~~25~~	~~21~~	34	~~22~~	~~19~~
		20-27	Interior	69	69	69	69	69	69	69	69	68	69	69	65	69	66	63	69	64	60	69	62	58	68	57	52	64	52	41	61	43	33	57	35	28	53	31	36	49	41	31
			Exposed	69	66	63	69	63	60	69	61	57	68	58	53	66	55	48	64	52	41	62	46	35	58	35	28	53	30	35	47	39	29	40	35	~~24~~	34	31	~~21~~	30	~~27~~	~~19~~
		27-45	Interior	72	72	72	72	72	72	72	72	71	72	72	68	72	72	66	72	69	63	71	67	61	67	63	57	63	59	52	59	54	42	55	49	35	50	40	30	40	34	39
			Exposed	72	72	66	72	69	63	70	66	60	67	63	58	65	61	54	62	59	51	60	56	45	55	50	35	48	39	29	37	33	37	32	29	32	43	38	~~27~~	38	34	~~24~~

*	Cells with an astrisks indicates that the L-foot must be oriented in the Y- direction as indicated in the image.
10	Highlighted cell indicate 3-rail system span. Contact Unirac Engineering Services for support.
~~10~~	Highlighted cell with strikethrough indicate 3-rail system span and module clamp allowable capacity exceeds with 3-rails. 4-Rail system required. Contact Unirac Engineering Services for support.

UNIRAC

ASCE 7-16	II	30 ft	Ss = 3.00	23 sq.ft	PORTRAIT	CROSS-SLOPE	NXT	NXT COMBO	Stronghold BUTYL Rafter #14S
Design Standard	Risk Category	Roof Height	Seismic	Module Area	Orientation	Rail Direction	Rail Type	Clamp	Attachment

SPAN TABLES

Maximum Allowable Rail Spans for Rooftop Solar Panels Parallel to the Roof Surface (inches)

Ground Snow Load (psf)	Wind Exposure Category	Roof Tilt Angle (deg)	Panel Exposure	Basic Wind Speed (mph)																																						
				90			95			100			105			110			115			120			130			140			150			160			170			180		
				Roof Wind Zone																																						
				1	2	3	1	2	3	1	2	3	1	2	3	1	2	3	1	2	3	1	2	3	1	2	3	1	2	3	1	2	3	1	2	3	1	2	3	1	2	3
30	B	0-7	Interior	54	54	54	54	54	54	54	54	54	54	54	54	54	54	54	54	54	54	54	54	54	54	54	54	54	54	54	54	54	54	54	54	51	54	54	43	54	54	36
			Exposed	54	54	54	54	54	54	54	54	54	54	54	54	54	54	54	54	54	54	54	54	54	54	54	52	54	54	42	54	52	34	54	45	30	54	38	40	50	33	35
		7-20	Interior	55	55	55	55	55	55	55	55	55	55	55	55	55	55	55	55	55	55	55	55	55	55	55	55	55	55	55	55	55	52	55	54	44	55	49	36	55	40	32
			Exposed	55	55	55	55	55	55	55	55	55	55	55	55	55	55	55	55	55	55	55	55	54	55	55	45	55	48	35	55	37	30	51	32	40	45	43	35	39	38	31
		20-27	Interior	61	61	61	61	61	61	61	61	61	61	61	61	61	61	61	61	61	61	61	61	61	61	61	61	61	61	61	61	61	60	61	60	55	61	56	51	61	52	42
			Exposed	61	61	61	61	61	61	61	61	61	61	61	61	61	61	61	61	61	61	61	61	61	61	60	56	61	56	50	61	51	39	60	41	32	57	34	27	53	30	35
		27-45	Interior	65	65	65	65	65	65	65	65	65	65	65	65	65	65	65	65	65	65	65	65	65	65	65	65	65	65	65	65	65	63	63	63	60	61	61	56	59	59	52
			Exposed	65	65	65	65	65	65	65	65	65	65	65	65	65	65	65	65	65	65	65	65	64	65	65	60	65	61	55	62	58	50	59	53	40	54	47	34	49	39	29
	C	0-7	Interior	54	54	54	54	54	54	54	54	54	54	54	54	54	54	54	54	54	54	54	54	54	54	54	54	54	54	47	54	54	37	54	50	32	54	42	43	53	36	38
			Exposed	54	54	54	54	54	54	54	54	54	54	54	54	54	51	54	54	46	54	54	40	54	51	33	54	41	42	31	54	34	36	43	30	32	36	40	28	32	35	25
		7-20	Interior	55	55	55	55	55	55	55	55	55	55	55	55	55	55	55	55	55	55	55	55	55	55	55	51	55	52	39	55	42	33	54	34	28	49	30	38	42	41	34
			Exposed	55	55	55	55	55	55	55	55	55	55	55	51	55	54	45	55	51	38	55	45	34	54	35	29	48	30	37	40	39	32	34	34	28	30	30	25	41	27	22
		20-27	Interior	61	61	61	61	61	61	61	61	61	61	61	61	61	61	61	61	61	61	61	61	61	61	61	58	61	58	53	61	53	44	61	46	35	59	37	29	55	32	38
			Exposed	61	61	61	61	61	61	61	61	61	61	61	59	61	60	56	61	58	52	61	54	47	61	47	35	58	36	29	54	31	36	49	41	30	42	36	26	36	32	22
		27-45	Interior	65	65	65	65	65	65	65	65	65	65	65	65	65	65	65	65	65	65	65	65	65	64	64	61	62	62	58	60	60	53	57	56	45	55	51	37	52	44	32
			Exposed	65	65	65	65	65	65	65	65	64	65	65	62	65	65	60	65	63	57	65	61	54	60	56	46	56	51	36	51	41	30	40	34	39	34	30	33	30	40	29
	D	0-7	Interior	55	55	55	55	55	55	55	55	55	55	55	55	55	55	55	55	55	55	55	55	53	55	55	45	55	54	36	55	47	31	55	39	41	51	34	36	43	30	32
			Exposed	55	55	55	55	55	55	55	55	52	55	55	47	55	55	40	55	53	35	55	50	32	55	40	41	50	33	35	41	43	31	34	38	27	30	33	24	40	30	21
		7-20	Interior	55	55	55	55	55	55	55	55	55	55	55	55	55	55	55	55	55	53	55	55	50	55	51	38	55	40	32	52	33	41	46	29	36	40	38	32	34	34	28
			Exposed	55	55	55	55	55	55	55	55	47	55	52	39	55	46	34	55	39	31	54	34	29	47	29	36	39	38	31	33	33	27	44	29	24	38	25	21	34	22	19
		20-27	Interior	63	63	63	63	63	63	63	63	63	63	63	63	63	63	63	63	63	60	63	62	58	63	57	52	63	52	41	61	43	33	57	35	28	53	31	36	49	41	31
			Exposed	63	63	63	63	63	60	63	61	57	63	58	53	63	55	48	63	52	41	62	46	35	58	35	28	53	30	35	47	39	29	40	35	24	34	31	21	30	27	19
		27-45	Interior	67	67	67	67	67	67	67	67	67	67	67	67	67	67	66	67	67	63	66	66	61	63	63	57	60	59	52	58	54	42	55	49	35	50	40	30	40	34	39
			Exposed	67	67	66	67	67	63	67	66	60	67	63	58	65	61	54	62	59	51	60	56	45	55	50	35	48	39	29	37	33	37	32	29	32	43	38	27	38	34	24
40	B	0-7	Interior	49	49	49	49	49	49	49	49	49	49	49	49	49	49	49	49	49	49	49	49	49	49	49	49	49	49	49	49	49	49	49	49	49	49	49	43	49	49	36
			Exposed	49	49	49	49	49	49	49	49	49	49	49	49	49	49	49	49	49	49	49	49	49	49	49	49	49	49	42	49	49	34	49	45	30	49	38	40	49	33	35
		7-20	Interior	51	51	51	51	51	51	51	51	51	51	51	51	51	51	51	51	51	51	51	51	51	51	51	51	51	51	51	51	51	51	51	51	44	51	49	36	51	40	32
			Exposed	51	51	51	51	51	51	51	51	51	51	51	51	51	51	51	51	51	51	51	51	51	51	51	45	51	48	35	51	37	30	51	32	40	45	43	35	39	38	31
		20-27	Interior	56	56	56	56	56	56	56	56	56	56	56	56	56	56	56	56	56	56	56	56	56	56	56	56	56	56	56	56	56	56	56	56	55	56	56	51	56	52	42
			Exposed	56	56	56	56	56	56	56	56	56	56	56	56	56	56	56	56	56	56	56	56	56	56	56	56	56	56	50	56	51	39	56	41	32	56	34	27	53	30	35
		27-45	Interior	61	61	61	61	61	61	61	61	61	61	61	61	61	61	61	61	61	61	61	61	61	61	61	61	61	61	61	60	60	60	58	58	58	57	57	56	55	55	52
			Exposed	61	61	61	61	61	61	61	61	61	61	61	61	61	61	61	61	61	61	61	61	61	61	61	60	61	61	55	60	58	50	58	53	40	54	47	34	49	39	29
	C	0-7	Interior	49	49	49	49	49	49	49	49	49	49	49	49	49	49	49	49	49	49	49	49	49	49	49	49	49	49	47	49	49	37	49	49	32	49	42	43	49	36	38
			Exposed	49	49	49	49	49	49	49	49	49	49	49	49	49	49	49	49	49	46	49	49	40	49	49	33	49	41	42	49	34	36	43	30	32	36	40	28	32	35	25
		7-20	Interior	51	51	51	51	51	51	51	51	51	51	51	51	51	51	51	51	51	51	51	51	51	51	51	51	51	51	39	51	42	33	50	34	28	49	30	38	42	41	34
			Exposed	51	51	51	51	51	51	51	51	51	51	51	51	51	51	45	51	51	38	51	45	34	51	35	29	48	30	37	40	39	32	34	34	28	30	30	25	41	27	22
		20-27	Interior	56	56	56	56	56	56	56	56	56	56	56	56	56	56	56	56	56	56	56	56	56	56	56	56	56	56	53	56	53	44	56	46	35	55	37	29	54	32	38
			Exposed	56	56	56	56	56	56	56	56	56	56	56	56	56	56	56	56	56	52	56	54	47	56	47	35	56	36	29	54	31	36	49	41	30	42	36	26	36	32	22
		27-45	Interior	61	61	61	61	61	61	61	61	61	61	61	61	61	61	61	61	61	61	61	61	61	59	59	59	58	58	58	56	56	53	54	54	45	52	51	37	50	44	32
			Exposed	61	61	61	61	61	61	61	61	61	61	61	61	61	61	60	61	61	57	61	61	54	59	56	46	56	51	36	51	41	30	40	34	39	34	30	33	30	40	29
	D	0-7	Interior	51	51	51	51	51	51	51	51	51	51	51	51	51	51	51	51	51	51	51	51	51	51	51	51	51	51	36	51	47	31	51	39	41	51	34	36	43	30	32
			Exposed	51	51	51	51	51	51	51	51	51	51	51	47	51	51	40	51	51	35	51	50	32	51	40	41	50	33	35	41	43	31	34	38	27	30	33	24	40	30	21
		7-20	Interior	53	53	53	53	53	53	53	53	53	53	53	53	53	53	53	53	53	53	53	53	50	53	51	38	53	40	32	52	33	41	46	29	36	40	38	32	34	34	28
			Exposed	53	53	53	53	53	53	53	53	47	53	52	39	53	46	34	53	39	31	53	34	29	47	29	36	39	38	31	33	33	27	44	29	24	38	25	21	34	22	19
		20-27	Interior	58	58	58	58	58	58	58	58	58	58	58	58	58	58	58	58	58	58	58	58	58	58	57	52	58	52	41	58	43	33	56	35	28	53	31	36	49	41	31
			Exposed	58	58	58	58	58	58	58	58	57	58	58	53	58	55	48	58	52	41	58	46	35	58	35	28	53	30	35	47	39	29	40	35	24	34	31	21	30	27	19
		27-45	Interior	62	62	62	62	62	62	62	62	62	62	62	62	62	62	62	62	62	62	61	61	61	59	59	57	57	57	52	55	54	42	53	49	35	50	40	30	40	34	39
			Exposed	62	62	62	62	62	62	62	62	60	62	62	58	62	61	54	62	59	51	60	56	45	55	50	35	48	39	29	37	33	37	32	29	32	43	38	27	38	34	24
50	B	0-7	Interior	45	45	45	45	45	45	45	45	45	45	45	45	45	45	45	45	45	45	45	45	45	45	45	45	45	45	45	45	45	45	45	45	45	45	45	43	45	45	36
			Exposed	45	45	45	45	45	45	45	45	45	45	45	45	45	45	45	45	45	45	45	45	45	45	45	45	45	45	42	45	45	34	45	45	30	45	38	40	45	33	35
		7-20	Interior	47	47	47	47	47	47	47	47	47	47	47	47	47	47	47	47	47	47	47	47	47	47	47	47	47	47	47	47	47	47	47	47	44	47	47	36	47	40	32
			Exposed	47	47	47	47	47	47	47	47	47	47	47	47	47	47	47	47	47	47	47	47	47	47	47	45	47	47	35	47	37	30	47	32	40	45	43	35	39	38	31
		20-27	Interior	53	53	53	53	53	53	53	53	53	53	53	53	53	53	53	53	53	53	53	53	53	53	53	53	53	53	53	53	53	53	53	53	53	53	53	51	53	52	42
			Exposed	53	53	53	53	53	53	53	53	53	53	53	53	53	53	53	53	53	53	53	53	53	53	53	53	53	53	50	53	51	39	53	41	32	53	34	27	53	30	35
		27-45	Interior	61*	61*	61*	61*	61*	61*	61*	61*	61*	61*	61*	61*	61*	61*	61*	61*	61*	61*	61*	61*	61*	61*	61*	61*	61*	61*	61*	61*	61*	61*	62*	62*	55	54	54	54	52	52	52
			Exposed	61*	61*	61*	61*	61*	61*	61*	61*	61*	61*	61*	61*	61*	61*	61*	61*	61*	61*	61*	61*	61*	61*	61*	60*	61*	61*	55	61*	56	50	55	53	40	54	47	34	49	39	29
	C	0-7	Interior	45	45	45	45	45	45	45	45	45	45	45	45	45	45	45	45	45	45	45	45	45	45	45	45	45	45	45	45	45	37	45	45	32	45	42	43	45	36	38
			Exposed	45	45	45	45	45	45	45	45	45	45	45	45	45	45	45	45	45	45	45	45	40	45	45	33	45	41	42	45	34	36	43	30	32	36	40	28	32	35	25
		7-20	Interior	47	47	47	47	47	47	47	47	47	47	47	47	47	47	47	47	47	47	47	47	47	47	47	47	47	47	39	47	42	33	47	34	28	46	30	38	42	41	34
			Exposed	47	47	47	47	47	47	47	47	47	47	47	47	47	47	45	47	47	38	47	45	34	47	35	29	47	30	37	40	39	32	34	34	28	30	30	25	41	27	22
		20-27	Interior	53	53	53	53	53	53	53	53	53	53	53	53	53	53	53	53	53	53	53	53	53	53	53	53	53	53	53	53	53	44	52	46	35	51	37	29	50	32	38
			Exposed	53	53	53	53	53	53	53	53	53	53	53	53	53	53	53	53	53	52	53	53	47	53	47	35	53	36	29	53	31	36	49	41	30	42	36	26	36	32	22
		27-45	Interior	61*	61*	61*	61*	61*	61*	61*	61*	61*	61*	61*	61*	61*	61*	61*	61*	61*	61*	61*	61*	61*	60*	60*	60*	61*	61*	54	53	53	53	51	51	45	49	49	37	48	44	32
			Exposed	61*	61*	61*	61*	61*	61*	61*	61*	61*	61*	61*	61*	61*	60*	61*	61*	57	61*	61*	54	60*	56	46	54	51	36	51	41	30	40	34	39	34	30	33	30	40	29
	D	0-7	Interior	47	47	47	47	47	47	47	47	47	47	47	47	47	47	47	47	47	47	47	47	47	47	47	47	47	47	36	47	47	31	47	39	41	47	34	36	43	30	32
			Exposed	47	47	47	47	47	47	47	47	47	47	47	47	47	47	40	47	47	35	47	47	32	47	40	41	47	33	35	41	43	31	34	38	27	30	33	24	40	30	21
		7-20	Interior	49	49	49	49	49	49	49	49	49	49	49	49	49	49	49	49	49	49	49	49	49	49	49	38	49	40	32	48	33	41	46	29	36	40	38	32	34	34	28
			Exposed	49	49	49	49	49	49	49	49	47	49	49	39	49	46	34	49	39	31	49	34	29	47	29	36	39	38	31	33	33	27	44	29	24	38	25	21	34	22	19
		20-27	Interior	54	54	54	54	54	54	54	54	54	54	54	54	54	54	54	54	54	54	54	54	54	54	54	52	54	52	41	54	43	33	53	35	28	51	31	36	49	41	31
			Exposed	54	54	54	54	54	54	54	54	54	54	54	53	54	54	48	54	52	41	54	46	35	54	35	28	53	30	35	47	39	29	40	35	24	34	31	21	30	27	19
		27-45	Interior	68*	68*	68*	68*	68*	68*	68*	68*	68*	68*	68*	68*	68*	68*	59	68*	68*	58	67*	67*	57	56	56	56	54	54	52	52	52	42	50	49	35	48	40	30	40	34	39
			Exposed	68*	68*	59	68*	68*	59	68*	59	59	67*	59	58	59	59	54	58	58	51	57	56	45	55	50	35	48	39	29	37	33	37	32	29	32	43	38	27	38	34	24

* Cells with an astrisks indicates that the L-foot must be oriented in the Y- direction as indicated in the image.

10 Highlighted cell indicate 3-rail system span. Contact Unirac Engineering Services for support.

~~10~~ Highlighted cell with strikethrough indicate 3-rail system span and module clamp allowable capacity exceeds with 3-rails. 4-Rail system required. Contact Unirac Engineering Services for support.

UNIRAC

ASCE 7-16	II	30 ft	Ss = 3.00	23 sq.ft	PORTRAIT	CROSS-SLOPE	NXT	NXT COMBO	Stronghold BUTYL Rafter #14S
Design Standard	Risk Category	Roof Height	Seismic	Module Area	Orientation	Rail Direction	Rail Type	Clamp	Attachment

SPAN TABLES

Maximum Allowable Rail Spans for Rooftop Solar Panels Parallel to the Roof Surface (inches)

Ground Snow Load (psf)	Wind Exposure Category	Roof Tilt Angle (deg)	Panel Exposure	Basic Wind Speed (mph)																																						
				90			95			100			105			110			115			120			130			140			150			160			170			180		
				Roof Wind Zone																																						
				1	2	3	1	2	3	1	2	3	1	2	3	1	2	3	1	2	3	1	2	3	1	2	3	1	2	3	1	2	3	1	2	3	1	2	3	1	2	3
60	B	0-7	Interior	41	41	41	41	41	41	41	41	41	41	41	41	41	41	41	41	41	41	41	41	41	41	41	41	41	41	41	41	41	41	41	41	41	41	41	41	41	41	36
			Exposed	41	41	41	41	41	41	41	41	41	41	41	41	41	41	41	41	41	41	41	41	41	41	41	41	41	41	41	41	41	34	41	41	30	41	38	40	41	33	35
		7-20	Interior	43	43	43	43	43	43	43	43	43	43	43	43	43	43	43	43	43	43	43	43	43	43	43	43	43	43	43	43	43	43	43	43	43	43	43	36	43	40	32
			Exposed	43	43	43	43	43	43	43	43	43	43	43	43	43	43	43	43	43	43	43	43	43	43	43	43	43	43	35	43	37	30	43	32	40	43	43	35	39	38	31
		20-27	Interior	49	49	49	49	49	49	49	49	49	49	49	49	49	49	49	49	49	49	49	49	49	49	49	49	49	49	49	49	49	49	49	49	49	49	49	49	49	49	42
			Exposed	49	49	49	49	49	49	49	49	49	49	49	49	49	49	49	49	49	49	49	49	49	49	49	49	49	49	49	49	49	39	49	41	32	49	34	27	49	30	35
		27-45	Interior	54*	54*	54*	54*	54*	54*	54*	54*	54*	54*	54*	54*	54*	54*	54*	54*	54*	54*	54*	54*	54*	54*	54*	54*	54*	54*	54*	53*	53*	53*	52*	52*	52*	53*	53*	53*	51*	51*	51*
			Exposed	54*	54*	54*	54*	54*	54*	54*	54*	54*	54*	54*	54*	54*	54*	54*	54*	54*	54*	54*	54*	54*	54*	54*	54*	54*	54*	54*	53*	53*	50	52*	52*	40	53*	47	34	49	39	29
	C	0-7	Interior	41	41	41	41	41	41	41	41	41	41	41	41	41	41	41	41	41	41	41	41	41	41	41	41	41	41	41	41	41	37	41	41	32	41	41	43	41	36	38
			Exposed	41	41	41	41	41	41	41	41	41	41	41	41	41	41	41	41	41	41	41	41	40	41	41	33	41	41	42	41	34	36	41	30	32	36	40	28	32	35	25
		7-20	Interior	43	43	43	43	43	43	43	43	43	43	43	43	43	43	43	43	43	43	43	43	43	43	43	43	43	43	39	43	42	33	43	34	28	43	30	38	42	41	34
			Exposed	43	43	43	43	43	43	43	43	43	43	43	43	43	43	43	43	43	38	43	43	34	43	35	29	43	30	37	40	39	32	34	34	28	30	30	25	41	27	22
		20-27	Interior	49	49	49	49	49	49	49	49	49	49	49	49	49	49	49	49	49	49	49	49	49	49	49	44	49	46	35	48	37	29	47	32	38	49	49	49	47	32	38
			Exposed	49	49	49	49	49	49	49	49	49	49	49	49	49	49	49	49	49	49	49	49	47	49	47	35	49	36	29	49	31	36	49	41	30	42	36	26	36	32	22
		27-45	Interior	54*	54*	54*	54*	54*	54*	54*	54*	54*	54*	54*	54*	54*	54*	54*	54*	54*	54*	54*	54*	54*	53*	53*	53*	53*	53*	53*	52*	52*	52*	52*	52*	45	52*	52*	37	46	44	32
			Exposed	54*	54*	54*	54*	54*	54*	54*	54*	54*	54*	54*	54*	54*	54*	54*	54*	54*	54*	54*	54*	46	53*	51*	36	51*	41	30	40	34	39	34	30	33	30	40	29			
	D	0-7	Interior	43	43	43	43	43	43	43	43	43	43	43	43	43	43	43	43	43	43	43	43	43	43	43	43	43	43	36	43	43	31	43	39	41	43	34	36	43	30	32
			Exposed	43	43	43	43	43	43	43	43	43	43	43	43	43	43	43	40	43	35	43	43	32	43	40	41	43	33	35	41	43	31	34	38	27	30	33	24	40	30	21
		7-20	Interior	45	45	45	45	45	45	45	45	45	45	45	45	45	45	45	45	45	45	45	45	45	45	45	38	45	40	32	45	33	41	44	29	36	40	38	32	34	34	28
			Exposed	45	45	45	45	45	45	45	45	45	45	45	39	45	45	34	45	39	31	45	34	29	45	29	36	39	38	31	33	33	27	44	29	24	38	25	21	34	22	19
		20-27	Interior	51	51	51	51	51	51	51	51	51	51	51	51	51	51	51	51	51	51	51	51	51	51	51	51	51	51	41	51	43	33	50	35	28	49	31	36	48	41	31
			Exposed	51	51	51	51	51	51	51	51	51	51	51	51	51	51	48	51	51	41	51	46	35	51	35	28	51	30	35	47	39	29	40	35	24	34	31	21	30	27	19
		27-45	Interior	58*	58*	58*	58*	58*	58*	58*	58*	58*	58*	58*	58*	58*	58*	58*	57*	57*	57*	57*	57*	57*	57*	57*	57*	57*	57*	51	49	49	42	48	48	35	46	40	30	40	34	39
			Exposed	58*	58*	58*	58*	58*	58*	58*	58*	58*	58*	58*	58*	58*	58*	54	57*	57*	51	57*	56*	45	53	50	35	48	39	29	37	33	37	32	29	32	43	38	27	38	34	24
70	B	0-7	Interior	38	38	38	38	38	38	38	38	38	38	38	38	38	38	38	38	38	38	38	38	38	38	38	38	38	38	38	38	38	38	38	38	38	38	38	38	38	38	36
			Exposed	38	38	38	38	38	38	38	38	38	38	38	38	38	38	38	38	38	38	38	38	38	38	38	38	38	38	38	38	38	34	38	38	30	38	38	40	38	33	35
		7-20	Interior	40	40	40	40	40	40	40	40	40	40	40	40	40	40	40	40	40	40	40	40	40	40	40	40	40	40	40	40	40	40	40	40	40	40	40	36	40	40	32
			Exposed	40	40	40	40	40	40	40	40	40	40	40	40	40	40	40	40	40	40	40	40	40	40	40	40	40	40	35	40	37	30	40	32	40	40	43	35	39	38	31
		20-27	Interior	49*	49*	49*	49*	49*	49*	49*	49*	49*	49*	49*	49*	49*	49*	49*	49*	49*	49*	49*	49*	49*	49*	49*	49*	49*	49*	49*	49*	49*	49*	49*	49*	49*	49*	49*	49*	49*	49*	42
			Exposed	49*	49*	49*	49*	49*	49*	49*	49*	49*	49*	49*	49*	49*	49*	49*	49*	49*	49*	49*	49*	49*	49*	49*	49*	49*	49*	49*	49*	49*	39	49*	41	32	49*	34	27	49*	30	35
		27-45	Interior	51*	51*	51*	51*	51*	51*	51*	51*	51*	51*	51*	51*	51*	51*	51*	51*	51*	51*	51*	51*	51*	51*	51*	51*	51*	51*	51*	50*	50*	50*	49*	49*	49*	48*	48*	48*	47*	47*	47*
			Exposed	51*	51*	51*	51*	51*	51*	51*	51*	51*	51*	51*	51*	51*	51*	51*	51*	51*	51*	51*	51*	51*	51*	51*	51*	51*	51*	51*	50*	50*	50*	49*	49*	40	48*	47*	34	47*	39	29
	C	0-7	Interior	38	38	38	38	38	38	38	38	38	38	38	38	38	38	38	38	38	38	38	38	38	38	38	38	38	38	38	38	38	37	38	38	32	38	38	43	38	36	38
			Exposed	38	38	38	38	38	38	38	38	38	38	38	38	38	38	38	38	38	38	38	38	38	38	38	33	38	38	42	38	34	36	38	30	32	36	40	28	32	35	25
		7-20	Interior	40	40	40	40	40	40	40	40	40	40	40	40	40	40	40	40	40	40	40	40	40	40	40	40	40	40	39	40	40	33	40	34	28	40	30	38	40	41	34
			Exposed	40	40	40	40	40	40	40	40	40	40	40	40	40	40	40	40	40	38	40	40	34	40	35	29	40	30	37	40	39	32	34	34	28	30	30	25	41	27	22
		20-27	Interior	49*	49*	49*	49*	49*	49*	49*	49*	49*	49*	49*	49*	49*	49*	49*	49*	49*	49*	49*	49*	49*	49*	49*	44	48*	46	35	48*	37	29	47*	32	38	49*	49*	49*	47*	32	38
			Exposed	49*	49*	49*	49*	49*	49*	49*	49*	49*	49*	49*	49*	49*	49*	49*	49*	49*	49*	49*	49*	47*	49*	47*	35	49*	36	29	49*	31	36	48*	41	30	42	36	26	36	32	22
		27-45	Interior	51*	51*	51*	51*	51*	51*	51*	51*	51*	51*	51*	51*	51*	51*	51*	51*	51*	51*	51*	51*	51*	50*	50*	50*	49*	49*	49*	48*	48*	48*	46*	46*	45*	45*	45*	37	46*	44	32
			Exposed	51*	51*	51*	51*	51*	51*	51*	51*	51*	51*	51*	51*	51*	51*	51*	51*	51*	51*	51*	51*	51*	50*	50*	46*	49*	49*	36	48*	41	30	40	34	39	34	30	33	30	40	29
	D	0-7	Interior	40	40	40	40	40	40	40	40	40	40	40	40	40	40	40	40	40	40	40	40	40	40	40	40	40	40	36	40	40	31	40	39	41	40	34	36	40	30	32
			Exposed	40	40	40	40	40	40	40	40	40	40	40	40	40	40	40	40	40	35	40	40	32	40	40	41	40	33	35	40	43	31	34	38	27	30	33	24	40	30	21
		7-20	Interior	42	42	42	42	42	42	42	42	42	42	42	42	42	42	42	42	42	42	42	42	42	42	42	38	42	40	32	42	33	41	42	29	36	40	38	32	34	34	28
			Exposed	42	42	42	42	42	42	42	42	42	42	42	39	42	42	34	42	39	31	42	34	29	42	29	36	39	38	31	33	33	27	44	29	24	38	25	21	34	22	19
		20-27	Interior	48	48	48	48	48	48	48	48	48	48	48	48	48	48	48	48	48	48	48	48	48	48	48	48	48	48	41	48	43	33	47	35	28	46	31	36	45	41	31
			Exposed	48	48	48	48	48	48	48	48	48	48	48	48	48	48	48	48	41	48	46	35	48	35	28	48	30	35	47	39	29	40	35	24	34	31	21	30	27	19
		27-45	Interior	53*	53*	53*	53*	53*	53*	53*	53*	53*	53*	53*	53*	53*	53*	53*	52*	52*	52*	52*	52*	52*	50*	50*	50*	51*	51*	51*	49*	49*	42	49*	49*	35	45	40	30	40	34	39
			Exposed	53*	53*	53*	53*	53*	53*	53*	53*	53*	53*	53*	53*	53*	53*	53*	52*	52*	51*	52*	52*	45	50*	50*	35	49*	39	29	37	33	37	32	29	32	43	38	27	38	34	24
80	B	0-7	Interior	36	36	36	36	36	36	36	36	36	36	36	36	36	36	36	36	36	36	36	36	36	36	36	36	36	36	36	36	36	36	36	36	36	36	36	36	36	36	36
			Exposed	36	36	36	36	36	36	36	36	36	36	36	36	36	36	36	36	36	36	36	36	36	36	36	36	36	36	36	36	36	34	36	36	30	36	36	40	36	33	35
		7-20	Interior	37	37	37	37	37	37	37	37	37	37	37	37	37	37	37	37	37	37	37	37	37	37	37	37	37	37	37	37	37	37	37	37	37	37	37	37	37	37	32
			Exposed	37	37	37	37	37	37	37	37	37	37	37	37	37	37	37	37	37	37	37	37	37	37	37	37	37	37	35	37	37	30	37	32	40	37	43	35	37	38	31
		20-27	Interior	46*	46*	46*	46*	46*	46*	46*	46*	46*	46*	46*	46*	46*	46*	46*	46*	46*	46*	46*	46*	46*	46*	46*	46*	46*	46*	46*	46*	46*	46*	46*	46*	46*	46*	46*	46*	46*	46*	42*
			Exposed	46*	46*	46*	46*	46*	46*	46*	46*	46*	46*	46*	46*	46*	46*	46*	46*	46*	46*	46*	46*	46*	46*	46*	46*	46*	46*	46*	46*	46*	39	46*	41	32	46*	34	27	46*	30	35
		27-45	Interior	48*	48*	48*	48*	48*	48*	48*	48*	48*	48*	48*	48*	48*	48*	48*	48*	48*	48*	48*	48*	48*	48*	48*	48*	48*	48*	48*	48*	48*	48*	47*	47*	47*	46*	46*	46*	45*	45*	45*
			Exposed	48*	48*	48*	48*	48*	48*	48*	48*	48*	48*	48*	48*	48*	48*	48*	48*	48*	48*	48*	48*	48*	48*	48*	48*	48*	48*	48*	48*	48*	48*	47*	47*	41*	46*	46*	34	45*	40*	29
	C	0-7	Interior	36	36	36	36	36	36	36	36	36	36	36	36	36	36	36	36	36	36	36	36	36	36	36	36	36	36	36	36	36	36	36	36	32	36	36	43	36	36	38
			Exposed	36	36	36	36	36	36	36	36	36	36	36	36	36	36	36	36	36	36	36	36	36	36	36	33	36	36	42	36	34	36	36	30	32	36	40	28	32	35	25
		7-20	Interior	37	37	37	37	37	37	37	37	37	37	37	37	37	37	37	37	37	37	37	37	37	37	37	37	37	37	37	37	37	33	37	34	28	37	30	38	37	41	34
			Exposed	37	37	37	37	37	37	37	37	37	37	37	37	37	37	37	37	37	37	37	37	34	37	35	29	37	30	37	37	39	32	34	34	28	30	30	25	41	27	22
		20-27	Interior	46*	46*	46*	46*	46*	46*	46*	46*	46*	46*	46*	46*	46*	46*	46*	46*	46*	46*	46*	46*	46*	46*	46*	44*	46*	46*	46*	46*	46*	44*	46*	46*	35	45*	37	29	45*	32	38
			Exposed	46*	46*	46*	46*	46*	46*	46*	46*	46*	46*	46*	46*	46*	46*	46*	46*	46*	46*	46*	46*	46*	46*	46*	35	46*	36	29	46*	31	36	46*	41	30	42*	36	26	36	32	22
		27-45	Interior	48*	48*	48*	48*	48*	48*	48*	48*	48*	48*	48*	48*	48*	48*	48*	48*	48*	48*	48*	48*	48*	48*	48*	48*	47*	47*	47*	46*	46*	46*	44*	44*	44*	43*	43*	37	42*	42*	32
			Exposed	48*	48*	48*	48*	48*	48*	48*	48*	48*	48*	48*	48*	48*	48*	48*	48*	48*	48*	48*	48*	48*	48*	48*	46*	47*	47*	36	46*	41*	30	40*	34	39	34	30	33	30	40	29
	D	0-7	Interior	38	38	38	38	38	38	38	38	38	38	38	38	38	38	38	38	38	38	38	38	38	38	38	38	38	38	38	38	38	31	38	38	41	38	34	36	38	30	32
			Exposed	38	38	38	38	38	38	38	38	38	38	38	38	38	38	38	38	38	35	38	38	32	38	38	41	38	33	35	38	43	31	34	38	27	30	33	24	40	30	21
		7-20	Interior	39	39	39	39	39	39	39	39	39	39	39	39	39	39	39	39	39	39	39	39	39	39	39	38	39	39	32	39	33	41	39	29	36	39	38	32	34	34	28
			Exposed	39	39	39	39	39	39	39	39	39	39	39	39	39	39	34	39	39	31	39	34	29	39	29	36	39	38	31	33	33	27	44	29	24	38	25	21	34	22	19
		20-27	Interior	48*	48*	48*	48*	48*	48*	48*	48*	48*	48*	48*	48*	48*	48*	48*	48*	48*	48*	48*	48*	48*	48*	48*	48*	48*	48*	41	48*	43	33	47*	35	28	46*	31	36	43	41	31
			Exposed	48*	48*	48*	48*	48*	48*	48*	48*	48*	48*	48*	48*	48*	48*	48*	48*	41	48*	46*	35	48*	35	28	48*	30	35	47*	39	29	40	35	24	34	31	21	30	27	19
		27-45	Interior	51*	51*	51*	51*	51*	51*	51*	51*	51*	51*	51*	51*	51*	51*	51*	50*	50*	50*	49*	49*	49*	48*	48*	48*	47*	47*	47*	46*	46*	42	44*	44*	35	45*	40	30	40	34	39
			Exposed	51*	51*	51*	51*	51*	51*	51*	51*	51*	51*	51*	51*	51*	51*	51*	50*	50*	50*	49*	49*	45*	48*	48*	35	47*	39	29	37	33	37	32	29	32	43	38	27	38	34	24

* Cells with an astrisks indicates that the L-foot must be oriented in the Y- direction as indicated in the image.

10 Highlighted cell indicate 3-rail system span. Contact Unirac Engineering Services for support.

~~10~~ Highlighted cell with strikethrough indicate 3-rail system span and module clamp allowable capacity exceeds with 3-rails. 4-Rail system required. Contact Unirac Engineering Services for support.

UNIRAC

ASCE 7-16	II	30 ft	Ss = 3.00	23 sq.ft	PORTRAIT	CROSS-SLOPE	NXT	NXT COMBO	Stronghold BUTYL Rafter #14S
Design Standard	Risk Category	Roof Height	Seismic	Module Area	Orientation	Rail Direction	Rail Type	Clamp	Attachment

SPAN TABLES

Maximum Allowable Rail Spans for Rooftop Solar Panels Parallel to the Roof Surface (inches)

Ground Snow Load (psf)	Wind Exposure Category	Roof Tilt Angle (deg)	Panel Exposure	Basic Wind Speed (mph)																																						
				90			95			100			105			110			115			120			130			140			150			160			170			180		
				Roof Wind Zone																																						
				1	2	3	1	2	3	1	2	3	1	2	3	1	2	3	1	2	3	1	2	3	1	2	3	1	2	3	1	2	3	1	2	3	1	2	3	1	2	3
90	B	0-7	Interior	34	34	34	34	34	34	34	34	34	34	34	34	34	34	34	34	34	34	34	34	34	34	34	34	34	34	34	34	34	34	34	34	34	34	34	34	34	34	34
			Exposed	34	34	34	34	34	34	34	34	34	34	34	34	34	34	34	34	34	34	34	34	34	34	34	34	34	34	34	34	34	34	34	34	30	34	34	40	34	33	35
		7-20	Interior	35	35	35	35	35	35	35	35	35	35	35	35	35	35	35	35	35	35	35	35	35	35	35	35	35	35	35	35	35	35	35	35	35	35	35	35	35	35	32
			Exposed	35	35	35	35	35	35	35	35	35	35	35	35	35	35	35	35	35	35	35	35	35	35	35	35	35	35	35	35	35	30	35	32	40	35	43	35	35	38	31
		20-27	Interior	41*	41*	41*	41*	41*	41*	41*	41*	41*	41*	41*	41*	41*	41*	41*	41*	41*	41*	41*	41*	41*	41*	41*	41*	41*	41*	41*	41*	41*	41*	41*	41*	41*	41*	41*	41*	41*	41*	41*
			Exposed	41*	41*	41*	41*	41*	41*	41*	41*	41*	41*	41*	41*	41*	41*	41*	41*	41*	41*	41*	41*	41*	41*	41*	41*	41*	41*	41*	41*	41*	39*	41*	41*	32	41*	34	27	41*	30	35
		27-45	Interior	43*	43*	43*	43*	43*	43*	43*	43*	43*	43*	43*	43*	43*	43*	43*	43*	43*	43*	43*	43*	43*	43*	43*	43*	43*	43*	43*	43*	43*	43*	43*	43*	43*	43*	43*	43*	43*	43*	43*
			Exposed	43*	43*	43*	43*	43*	43*	43*	43*	43*	43*	43*	43*	43*	43*	43*	43*	43*	43*	43*	43*	43*	43*	43*	43*	43*	43*	43*	43*	43*	43*	43*	43*	40*	43*	43*	34	43*	39*	29
	C	0-7	Interior	34	34	34	34	34	34	34	34	34	34	34	34	34	34	34	34	34	34	34	34	34	34	34	34	34	34	34	34	34	34	34	34	32	34	34	41	34	34	38
			Exposed	34	34	34	34	34	34	34	34	34	34	34	34	34	34	34	34	34	34	34	34	34	34	34	34	34	34	41	34	34	36	34	30	32	34	40	28	32	35	25
		7-20	Interior	35	35	35	35	35	35	35	35	35	35	35	35	35	35	35	35	35	35	35	35	35	35	35	35	35	35	35	35	35	33	35	34	28	35	30	38	35	41	34
			Exposed	35	35	35	35	35	35	35	35	35	35	35	35	35	35	35	35	35	35	35	35	34	35	35	29	35	30	37	35	39	32	34	34	28	30	30	25	41	27	22
		20-27	Interior	41*	41*	41*	41*	41*	41*	41*	41*	41*	41*	41*	41*	41*	41*	41*	41*	41*	41*	41*	41*	41*	41*	41*	41*	41*	41*	41*	41*	41*	41*	41*	41*	35	41*	37*	29	41*	32	38
			Exposed	41*	41*	41*	41*	41*	41*	41*	41*	41*	41*	41*	41*	41*	41*	41*	41*	41*	41*	41*	41*	41*	41*	41*	35	41*	36	29	41*	31	36	41*	41	30	41*	36	26	36	32	22
		27-45	Interior	43*	43*	43*	43*	43*	43*	43*	43*	43*	43*	43*	43*	43*	43*	43*	43*	43*	43*	43*	43*	43*	43*	43*	43*	43*	43*	43*	43*	43*	43*	43*	43*	43*	42*	42*	37*	41*	41*	32
			Exposed	43*	43*	43*	43*	43*	43*	43*	43*	43*	43*	43*	43*	43*	43*	43*	43*	43*	43*	43*	43*	43*	43*	43*	43*	43*	43*	36*	43*	41*	30	40*	34	39	34	30	33	30	40	29
	D	0-7	Interior	36	36	36	36	36	36	36	36	36	36	36	36	36	36	36	36	36	36	36	36	36	36	36	36	36	36	36	36	36	31	36	36	41	36	34	36	36	30	32
			Exposed	36	36	36	36	36	36	36	36	36	36	36	36	36	36	36	36	36	35	36	36	32	36	36	41	36	33	35	36	43	31	34	38	27	30	33	24	40	30	21
		7-20	Interior	37	37	37	37	37	37	37	37	37	37	37	37	37	37	37	37	37	37	37	37	37	37	37	37	37	37	32	37	33	41	37	29	36	37	38	32	34	34	28
			Exposed	37	37	37	37	37	37	37	37	37	37	37	37	37	37	34	37	37	31	37	34	29	37	29	36	37	38	31	33	33	27	44	29	24	38	25	21	34	22	19
		20-27	Interior	46*	46*	46*	46*	46*	46*	46*	46*	46*	46*	46*	46*	46*	46*	46*	46*	46*	46*	46*	46*	46*	46*	46*	46*	46*	46*	41*	46*	43*	33	45*	35	28	44*	31	36	43*	41	31
			Exposed	46*	46*	46*	46*	46*	46*	46*	46*	46*	46*	46*	46*	46*	46*	46*	46*	46*	41*	46*	46*	35	46*	35	28	46*	30	35	46*	39	29	40	35	24	34	31	21	30	27	19
		27-45	Interior	48*	48*	48*	48*	48*	48*	48*	48*	48*	48*	48*	48*	48*	48*	48*	48*	48*	48*	47*	47*	47*	46*	46*	46*	45*	45*	45*	44*	44*	42*	43*	43*	35	42*	40*	30	40*	34	39
			Exposed	48*	48*	48*	48*	48*	48*	48*	48*	48*	48*	48*	48*	48*	48*	48*	48*	48*	48*	47*	47*	45*	46*	46*	35	45*	39*	29	37	33	37	32	29	32	43	38	27	38	34	24
100	B	0-7	Interior	32	32	32	32	32	32	32	32	32	32	32	32	32	32	32	32	32	32	32	32	32	32	32	32	32	32	32	32	32	32	32	32	32	32	32	32	32	32	32
			Exposed	32	32	32	32	32	32	32	32	32	32	32	32	32	32	32	32	32	32	32	32	32	32	32	32	32	32	32	32	32	32	32	32	30	32	32	39	32	32	35
		7-20	Interior	33	33	33	33	33	33	33	33	33	33	33	33	33	33	33	33	33	33	33	33	33	33	33	33	33	33	33	33	33	33	33	33	33	33	33	33	33	33	32
			Exposed	33	33	33	33	33	33	33	33	33	33	33	33	33	33	33	33	33	33	33	33	33	33	33	33	33	33	33	33	33	30	33	32	40	33	41	35	33	38	31
		20-27	Interior	39*	39*	39*	39*	39*	39*	39*	39*	39*	39*	39*	39*	39*	39*	39*	39*	39*	39*	39*	39*	39*	39*	39*	39*	39*	39*	39*	39*	39*	39*	39*	39*	39*	39*	39*	39*	39*	39*	39*
			Exposed	39*	39*	39*	39*	39*	39*	39*	39*	39*	39*	39*	39*	39*	39*	39*	39*	39*	39*	39*	39*	39*	39*	39*	39*	39*	39*	39*	39*	39*	39*	39*	39*	32	39*	34*	27	39*	30	35
		27-45	Interior	39*	39*	39*	39*	39*	39*	39*	39*	39*	39*	39*	39*	39*	39*	39*	39*	39*	39*	39*	39*	39*	39*	39*	39*	39*	39*	39*	39*	39*	39*	39*	39*	39*	39*	39*	39*	39*	39*	39*
			Exposed	39*	39*	39*	39*	39*	39*	39*	39*	39*	39*	39*	39*	39*	39*	39*	39*	39*	39*	39*	39*	39*	39*	39*	39*	39*	39*	39*	39*	39*	39*	39*	39*	39*	39*	39*	34*	39*	39*	29
	C	0-7	Interior	32	32	32	32	32	32	32	32	32	32	32	32	32	32	32	32	32	32	32	32	32	32	32	32	32	32	32	32	32	32	32	32	32	32	32	39	32	32	38
			Exposed	32	32	32	32	32	32	32	32	32	32	32	32	32	32	32	32	32	32	32	32	32	32	32	32	32	32	39	32	32	36	32	30	32	32	39	28	32	35	25
		7-20	Interior	33	33	33	33	33	33	33	33	33	33	33	33	33	33	33	33	33	33	33	33	33	33	33	33	33	33	33	33	33	33	33	33	28	33	30	38	33	41	34
			Exposed	33	33	33	33	33	33	33	33	33	33	33	33	33	33	33	33	33	33	33	33	33	33	33	29	33	30	37	33	39	32	33	34	28	30	30	25	41	27	22
		20-27	Interior	39*	39*	39*	39*	39*	39*	39*	39*	39*	39*	39*	39*	39*	39*	39*	39*	39*	39*	39*	39*	39*	39*	39*	39*	39*	39*	39*	39*	39*	39*	39*	39*	35*	39*	37*	29	39*	32	38
			Exposed	39*	39*	39*	39*	39*	39*	39*	39*	39*	39*	39*	39*	39*	39*	39*	39*	39*	35*	39*	39*	29	39*	31	36	39*	41	30	39*	36	26	36*	32	22						
		27-45	Interior	39*	39*	39*	39*	39*	39*	39*	39*	39*	39*	39*	39*	39*	39*	39*	39*	39*	39*	39*	39*	39*	39*	39*	39*	39*	39*	39*	39*	39*	39*	39*	39*	39*	39*	39*	37*	39*	39*	32*
			Exposed	39*	39*	39*	39*	39*	39*	39*	39*	39*	39*	39*	39*	39*	39*	39*	39*	39*	39*	39*	39*	39*	39*	39*	39*	39*	39*	36*	39*	39*	30	39*	34*	39	34*	30	33	30	40	29
	D	0-7	Interior	34	34	34	34	34	34	34	34	34	34	34	34	34	34	34	34	34	34	34	34	34	34	34	34	34	34	34	34	34	31	34	34	41	34	34	36	34	30	32
			Exposed	34	34	34	34	34	34	34	34	34	34	34	34	34	34	34	34	34	34	34	34	32	34	34	41	34	33	35	34	41	31	34	38	27	30	33	24	40	30	21
		7-20	Interior	35	35	35	35	35	35	35	35	35	35	35	35	35	35	35	35	35	35	35	35	35	35	35	35	35	35	32	35	33	41	35	29	36	35	38	32	34	34	28
			Exposed	35	35	35	35	35	35	35	35	35	35	35	35	35	35	34	35	35	31	35	34	29	35	29	36	35	38	31	33	33	27	43	29	24	38	25	21	34	22	19
		20-27	Interior	41*	41*	41*	41*	41*	41*	41*	41*	41*	41*	41*	41*	41*	41*	41*	41*	41*	41*	41*	41*	41*	41*	41*	41*	41*	41*	41*	41*	41*	33	41*	35	28	41*	31	36	40*	41	31
			Exposed	41*	41*	41*	41*	41*	41*	41*	41*	41*	41*	41*	41*	41*	41*	41*	41*	41*	41*	41*	41*	35	41*	35	28	41*	30	35	41*	39	29	40*	35	24	34	31	21	30	27	19
		27-45	Interior	43*	43*	43*	43*	43*	43*	43*	43*	43*	43*	43*	43*	43*	43*	43*	43*	43*	43*	43*	43*	43*	43*	43*	43*	43*	43*	43*	42*	42*	42*	41*	41*	35	40*	40*	30	39*	34	39
			Exposed	43*	43*	43*	43*	43*	43*	43*	43*	43*	43*	43*	43*	43*	43*	43*	43*	43*	43*	43*	43*	43*	43*	43*	35	43*	39*	29	38*	33	37	32	29	32	43	38	27	38	34	24

* Cells with an astrisks indicates that the L-foot must be oriented in the Y- direction as indicated in the image.

10 Highlighted cell indicate 3-rail system span. Contact Unirac Engineering Services for support.

~~10~~ Highlighted cell with strikethrough indicate 3-rail system span and module clamp allowable capacity exceeds with 3-rails. 4-Rail system required. Contact Unirac Engineering Services for support.

UNIRAC

ASCE 7-16	II	30 ft	Ss = 3.00	23 sq.ft	LANDSCAPE	CROSS-SLOPE	NXT	NXT COMBO	Stronghold BUTYL Rafter #14S
Design Standard	Risk Category	Roof Height	Seismic	Module Area	Orientation	Rail Direction	Rail Type	Clamp	Attachment

SPAN TABLES

Maximum Allowable Rail Spans for Rooftop Solar Panels Parallel to the Roof Surface (inches)

Ground Snow Load (psf)	Wind Exposure Category	Roof Tilt Angle (deg)	Panel Exposure	Basic Wind Speed (mph)																																						
				90			95			100			105			110			115			120			130			140			150			160			170			180		
				Roof Wind Zone																																						
				1	2	3	1	2	3	1	2	3	1	2	3	1	2	3	1	2	3	1	2	3	1	2	3	1	2	3	1	2	3	1	2	3	1	2	3	1	2	3
0	B	0-7	Interior	101	101	101	101	101	101	101	101	100	101	101	95	101	101	91	101	101	87	101	96	83	101	89	77	96	83	72	90	78	68	85	74	64	80	70	62	76	67	59
			Exposed	101	101	91	101	99	86	101	95	82	101	90	78	100	86	75	96	83	72	92	80	69	85	74	65	80	70	61	75	66	58	71	63	55	67	60	51	64	57	59
		7-20	Interior	102	102	102	102	102	102	102	102	97	102	102	92	102	96	88	102	92	84	102	88	80	92	81	74	86	75	69	82	70	65	77	66	62	74	63	59	70	61	56
			Exposed	102	96	87	102	91	83	101	86	78	93	82	75	89	78	71	86	75	68	83	72	66	78	66	62	73	63	59	69	60	55	66	56	51	63	53	59	61	60	56
		20-27	Interior	102	102	102	102	102	102	102	102	102	102	102	102	102	102	99	102	100	94	102	96	90	102	88	82	99	82	76	92	76	71	87	72	66	83	68	63	79	64	60
			Exposed	102	102	99	102	99	93	102	94	88	102	89	83	102	85	79	98	81	75	94	78	72	87	72	67	82	67	63	78	64	59	74	61	55	70	58	52	67	55	46
		27-45	Interior	103	103	103	103	103	103	103	103	103	103	103	103	103	103	103	103	103	98	103	103	94	103	97	87	98	90	81	91	84	76	85	79	71	80	75	68	75	71	64
			Exposed	103	103	103	103	103	97	103	103	92	103	98	88	103	93	84	98	89	81	93	86	77	85	79	72	79	74	67	74	70	63	69	66	60	65	63	57	63	60	54
	C	0-7	Interior	101	101	94	101	101	89	101	98	85	101	93	81	101	89	77	99	86	74	95	82	71	88	77	66	82	72	63	77	68	60	73	64	57	69	62	53	66	59	60
			Exposed	101	89	77	98	85	73	93	81	70	89	77	67	85	74	64	82	71	62	79	69	61	73	64	57	69	61	53	65	58	60	62	54	56	59	61	53	56	59	49
		7-20	Interior	102	100	91	102	94	86	102	89	81	98	85	77	92	81	74	89	77	71	85	74	68	80	68	63	75	64	60	71	61	57	68	58	53	65	55	60	62	52	58
			Exposed	92	80	74	88	76	70	84	72	66	81	69	64	78	66	62	75	64	60	72	62	58	68	59	54	64	54	60	61	51	57	58	58	53	55	55	49	62	52	44
		20-27	Interior	102	102	102	102	102	96	102	97	91	102	92	86	102	88	82	101	84	78	97	80	75	90	74	69	85	69	64	80	65	61	76	62	58	72	60	54	69	57	50
			Exposed	102	88	82	100	83	77	95	79	73	91	75	70	87	72	67	84	69	64	81	66	62	76	62	58	72	59	53	68	56	47	65	52	57	62	60	52	60	57	46
		27-45	Interior	103	103	103	103	103	101	103	103	96	103	101	91	103	97	87	102	92	83	97	89	80	88	82	74	82	76	69	76	72	65	71	68	62	67	64	59	64	62	56
			Exposed	103	96	87	100	91	82	94	87	78	90	83	75	85	79	72	81	76	69	78	73	66	72	68	62	67	64	59	63	61	54	61	58	51	58	55	59	55	52	55
	D	0-7	Interior	101	100	86	101	95	82	101	90	78	100	86	75	95	83	71	91	79	69	88	76	66	81	71	62	76	67	59	72	63	55	68	61	52	64	58	59	62	54	56
			Exposed	95	82	71	90	78	68	86	75	65	82	72	63	79	69	61	76	66	59	73	64	57	68	61	52	64	57	59	61	53	55	58	60	52	55	58	47	52	54	42
		7-20	Interior	102	91	83	101	86	78	93	82	75	89	78	71	86	74	68	83	71	65	80	68	63	75	64	60	70	61	56	67	57	52	63	54	59	61	61	56	59	58	53
			Exposed	85	74	68	82	70	65	78	67	62	75	64	60	73	62	58	70	60	56	68	59	53	64	54	60	61	60	56	57	57	52	54	53	47	61	50	41	58	44	37
		20-27	Interior	102	99	93	102	94	88	102	89	83	102	85	79	97	81	75	93	77	72	90	74	69	84	69	64	79	64	60	75	61	56	71	59	52	67	55	46	65	52	57
			Exposed	97	81	75	92	76	71	88	73	67	85	69	64	81	66	62	79	64	60	76	62	58	71	59	53	67	55	45	64	51	55	61	59	51	58	55	42	55	52	37
		27-45	Interior	103	103	98	103	103	92	103	98	88	102	93	84	97	89	80	92	85	77	88	82	74	81	76	69	75	71	64	70	66	61	66	63	58	63	61	54	61	58	51
			Exposed	97	89	80	91	84	76	86	80	72	82	77	69	78	73	66	75	70	64	72	68	62	66	64	58	63	60	54	60	57	48	56	53	57	53	61	53	49	58	48
10	B	0-7	Interior	90	90	90	90	90	90	90	90	90	90	90	90	90	90	90	90	90	87	90	90	83	90	89	77	90	83	72	90	78	68	85	74	64	80	70	62	76	67	59
			Exposed	90	90	90	90	90	86	90	90	82	90	90	78	90	86	75	90	83	72	90	80	69	85	74	65	80	70	61	75	66	58	71	63	55	67	60	51	64	57	59
		7-20	Interior	91	91	91	91	91	91	91	91	91	91	91	91	91	91	88	91	91	84	91	88	80	91	81	74	86	75	69	82	70	65	77	66	62	74	63	59	70	61	56
			Exposed	91	91	87	91	91	83	91	86	78	91	82	75	89	78	71	86	75	68	83	72	66	78	66	62	73	63	59	69	60	55	66	56	51	63	53	59	61	60	56
		20-27	Interior	99	99	99	99	99	99	99	99	99	99	99	99	99	99	99	99	99	94	99	96	90	99	88	82	99	82	76	92	76	71	87	72	66	83	68	63	79	64	60
			Exposed	99	99	99	99	99	93	99	94	88	99	89	83	99	85	79	98	81	75	94	78	72	87	72	67	82	67	63	78	64	59	74	61	55	70	58	52	67	55	46
		27-45	Interior	101	101	101	101	101	101	101	101	101	101	101	101	101	101	101	101	101	98	101	101	94	101	97	87	98	90	81	91	84	76	85	79	71	80	75	68	75	71	64
			Exposed	101	101	101	101	101	97	101	101	92	101	98	88	101	93	84	98	89	81	93	86	77	85	79	72	79	74	67	74	70	63	69	66	60	65	63	57	63	60	54
	C	0-7	Interior	90	90	90	90	90	89	90	90	85	90	90	81	90	89	77	90	86	74	90	82	71	88	77	66	82	72	63	77	68	60	73	64	57	69	62	53	66	59	60
			Exposed	90	89	77	90	85	73	90	81	70	89	77	67	85	74	64	82	71	62	79	69	61	73	64	57	69	61	53	65	58	60	62	54	56	59	61	53	56	59	49
		7-20	Interior	91	91	91	91	91	86	91	89	81	91	85	77	91	81	74	89	77	71	85	74	68	80	68	63	75	64	60	71	61	57	68	58	53	65	55	60	62	52	58
			Exposed	91	80	74	88	76	70	84	72	66	81	69	64	78	66	62	75	64	60	72	62	58	68	59	54	64	54	60	61	51	57	58	58	53	55	55	49	62	52	44
		20-27	Interior	99	99	99	99	99	96	99	97	91	99	92	86	99	88	82	99	84	78	97	80	75	90	74	69	85	69	64	80	65	61	76	62	58	72	60	54	69	57	50
			Exposed	99	88	82	99	83	77	95	79	73	91	75	70	87	72	67	84	69	64	81	66	62	76	62	58	72	59	53	68	56	47	65	52	57	62	60	52	60	57	46
		27-45	Interior	101	101	101	101	101	101	101	101	96	101	101	91	101	97	87	101	92	83	97	89	80	88	82	74	82	76	69	76	72	65	71	68	62	67	64	59	64	62	56
			Exposed	101	96	87	100	91	82	94	87	78	90	83	75	85	79	72	81	76	69	78	73	66	72	68	62	67	64	59	63	61	54	61	58	51	58	55	59	55	52	55
	D	0-7	Interior	90	90	86	90	90	82	90	90	78	90	86	75	90	83	71	90	79	69	88	76	66	81	71	62	76	67	59	72	63	55	68	61	52	64	58	59	62	54	56
			Exposed	90	82	71	90	78	68	86	75	65	82	72	63	79	69	61	76	66	59	73	64	57	68	61	52	64	57	59	61	53	55	58	60	52	55	58	47	52	54	42
		7-20	Interior	91	91	83	91	86	78	91	82	75	89	78	71	86	74	68	83	71	65	80	68	63	75	64	60	70	61	56	67	57	52	63	54	59	61	61	56	59	58	53
			Exposed	85	74	68	82	70	65	78	67	62	75	64	60	73	62	58	70	60	56	68	59	53	64	54	60	61	60	56	57	57	52	54	53	47	61	50	41	58	44	37
		20-27	Interior	100	99	93	100	94	88	100	89	83	100	85	79	97	81	75	93	77	72	90	74	69	84	69	64	79	64	60	75	61	56	71	59	52	67	55	46	65	52	57
			Exposed	97	81	75	92	76	71	88	73	67	85	69	64	81	66	62	79	64	60	76	62	58	71	59	53	67	55	45	64	51	55	61	59	51	58	55	42	55	52	37
		27-45	Interior	102	102	98	102	102	92	102	98	88	102	93	84	97	89	80	92	85	77	88	82	74	81	76	69	75	71	64	70	66	61	66	63	58	63	61	54	61	58	51
			Exposed	97	89	80	91	84	76	86	80	72	82	77	69	78	73	66	75	70	64	72	68	62	66	64	58	63	60	54	60	57	48	56	53	57	53	61	53	49	58	48
20	B	0-7	Interior	77	77	77	77	77	77	77	77	77	77	77	77	77	77	77	77	77	77	77	77	77	77	77	72	77	77	72	77	77	68	77	74	64	77	70	62	76	67	59
			Exposed	77	77	77	77	77	77	77	77	77	77	77	77	77	77	75	77	77	72	77	77	69	77	74	65	77	70	61	75	66	58	71	63	55	67	60	51	64	57	59
		7-20	Interior	77	77	77	77	77	77	77	77	77	77	77	77	77	77	77	77	77	77	77	77	77	77	77	74	77	75	69	77	70	65	77	66	62	74	63	59	70	61	56
			Exposed	77	77	77	77	77	77	77	77	77	77	77	75	77	77	71	77	75	68	77	72	66	77	66	62	73	63	59	69	60	55	66	56	51	63	53	59	61	60	56
		20-27	Interior	92	92	92	92	92	92	92	92	92	92	92	92	92	92	92	92	92	92	92	92	90	92	88	82	92	82	76	92	76	71	87	72	66	83	68	63	79	64	60
			Exposed	92	92	92	92	92	92	92	92	88	92	89	83	92	85	79	92	81	75	92	78	72	87	72	67	82	67	63	78	64	59	74	61	55	70	58	52	67	55	46
		27-45	Interior	95	95	95	95	95	95	95	95	95	95	95	95	95	95	95	95	95	95	95	95	94	95	95	87	95	90	81	91	84	76	85	79	71	80	75	68	75	71	64
			Exposed	95	95	95	95	95	95	95	95	92	95	95	88	95	93	84	95	89	81	93	86	77	85	79	72	79	74	67	74	70	63	69	66	60	65	63	57	63	60	54
	C	0-7	Interior	77	77	77	77	77	77	77	77	77	77	77	77	77	77	77	77	77	74	77	77	71	77	77	66	77	72	63	77	68	60	73	64	57	69	62	53	66	59	60
			Exposed	77	77	77	77	77	73	77	77	70	77	77	67	77	74	64	77	71	62	77	69	61	73	64	57	69	61	53	65	58	60	62	54	56	59	61	53	56	59	49
		7-20	Interior	77	77	77	77	77	77	77	77	77	77	77	77	77	77	74	77	77	71	77	74	68	77	68	63	75	64	60	71	61	57	68	58	53	65	55	60	62	52	58
			Exposed	77	77	74	77	76	70	77	72	66	77	69	64	77	66	62	75	64	60	72	62	58	68	59	54	64	54	60	61	51	57	58	58	53	55	55	49	62	52	44
		20-27	Interior	92	92	92	92	92	92	92	92	91	92	92	86	92	88	82	92	84	78	92	80	75	90	74	69	85	69	64	80	65	61	76	62	58	72	60	54	69	57	50
			Exposed	92	88	82	92	83	77	92	79	73	91	75	70	87	72	67	84	69	64	81	66	62	76	62	58	72	59	53	68	56	47	65	52	57	62	60	52	60	57	46
		27-45	Interior	95	95	95	95	95	95	95	95	95	95	95	91	95	95	87	95	92	83	95	89	80	88	82	74	82	76	69	76	72	65	71	68	62	67	64	59	64	62	56
			Exposed	95	95	87	95	91	82	94	87	78	90	83	75	85	79	72	81	76	69	78	73	66	72	68	62	67	64	59	63	61	54	61	58	51	58	55	59	55	52	55
	D	0-7	Interior	77	77	77	77	77	77	77	77	77	77	77	75	77	77	71	77	77	69	77	76	66	77	71	62	76	67	59	72	63	55	68	61	52	64	58	59	62	54	56
			Exposed	77	77	71	77	77	68	77	75	65	77	72	63	77	69	61	76	66	59	73	64	57	68	61	52	64	57	59	61	53	55	58	60	52	55	58	47	52	54	42
		7-20	Interior	77	77	77	77	77	77	77	77	75	77	77	71	77	74	68	77	71	65	77	68	63	75	64	60	70	61	56	67	57	52	63	54	59	61	61	56	59	58	53
			Exposed	77	74	68	77	70	65	77	67	62	75	64	60	73	62	58	70	60	56	68	59	53	64	54	60	61	60	56	57	57	52	54	53	47	61	50	41	58	44	37
		20-27	Interior	93	93	93	93	93	88	93	89	83	93	85	79	93	81	75	93	77	72	90	74	69	84	69	64	79	64	60	75	61	56	71	59	52	67	55	46	65	52	57
			Exposed	93	81	75	92	76	71	88	73	67	85	69	64	81	66	62	79	64	60	76	62	58	71	59	53	67	55	45	64	51	55	61	59	51	58	55	42	55	52	37
		27-45	Interior	96	96	96	96	96	92	96	96	88	96	93	84	96	89	80	92	85	77	88	82	74	81	76	69	75	71	64	70	66	61	66	63	58	63	61	54	61	58	51
			Exposed	96	89	80	91	84	76	86	80	72	82	77	69	78	73	66	75	70	64	72	68	62	66	64	58	63	60	54	60	57	48	56	53	57	53	61	53	49	58	48

* Cells with an astrisks indicates that the L-foot must be oriented in the Y- direction as indicated in the image.

10 Highlighted cell indicate 3-rail system span. Contact Unirac Engineering Services for support.

~~10~~ Highlighted cell with strikethrough indicate 3-rail system span and module clamp allowable capacity exceeds with 3-rails. 4-Rail system required. Contact Unirac Engineering Services for support.

UNIRAC

ASCE 7-16	II	30 ft	Ss = 3.00	23 sq.ft	LANDSCAPE	CROSS-SLOPE	NXT	NXT COMBO	Stronghold BUTYL Rafter #14S
Design Standard	Risk Category	Roof Height	Seismic	Module Area	Orientation	Rail Direction	Rail Type	Clamp	Attachment

SPAN TABLES

Maximum Allowable Rail Spans for Rooftop Solar Panels Parallel to the Roof Surface (inches)

Ground Snow Load (psf)	Wind Exposure Category	Roof Tilt Angle (deg)	Panel Exposure	Basic Wind Speed (mph)																																						
				90			95			100			105			110			115			120			130			140			150			160			170			180		
				Roof Wind Zone																																						
				1	2	3	1	2	3	1	2	3	1	2	3	1	2	3	1	2	3	1	2	3	1	2	3	1	2	3	1	2	3	1	2	3	1	2	3	1	2	3
30	B	0-7	Interior	76	76	76	76	76	76	76	76	76	76	76	76	76	76	76	76	76	76	76	76	76	76	76	76	76	76	72	76	76	68	76	74	64	76	70	62	76	67	59
			Exposed	76	76	76	76	76	76	76	76	76	76	76	76	76	76	75	76	76	72	76	76	69	76	74	65	76	70	61	75	66	58	71	63	55	67	60	51	64	57	59
		7-20	Interior	77	77	77	77	77	77	77	77	77	77	77	77	77	77	77	77	77	77	77	77	77	77	77	74	77	75	69	77	70	65	77	66	62	74	63	59	70	61	56
			Exposed	77	77	77	77	77	77	77	77	77	77	77	75	77	77	71	77	75	68	77	72	66	77	66	62	73	63	59	69	60	55	66	56	51	63	53	59	61	60	56
		20-27	Interior	85	85	85	85	85	85	85	85	85	85	85	85	85	85	85	85	85	85	85	85	85	85	85	82	85	82	76	85	76	71	85	72	66	83	68	63	79	64	60
			Exposed	85	85	85	85	85	85	85	85	85	85	85	83	85	85	79	85	81	75	85	78	72	85	72	67	82	67	63	78	64	59	74	61	55	70	58	52	67	55	46
		27-45	Interior	90	90	90	90	90	90	90	90	90	90	90	90	90	90	90	90	90	90	90	90	90	90	90	87	90	90	81	90	84	76	85	79	71	80	75	68	75	71	64
			Exposed	90	90	90	90	90	90	90	90	90	90	90	88	90	90	84	90	89	81	90	86	77	85	79	72	79	74	67	74	70	63	69	66	60	65	63	57	63	60	54
	C	0-7	Interior	76	76	76	76	76	76	76	76	76	76	76	76	76	76	76	76	76	74	76	76	71	76	76	66	76	72	63	76	68	60	73	64	57	69	62	53	66	59	60
			Exposed	76	76	76	76	76	73	76	76	70	76	76	67	76	74	64	76	71	62	76	69	61	73	64	57	69	61	53	65	58	60	62	54	56	59	61	53	56	59	49
		7-20	Interior	77	77	77	77	77	77	77	77	77	77	77	77	77	77	74	77	77	71	77	74	68	77	68	63	75	64	60	71	61	57	68	58	53	65	55	60	62	52	58
			Exposed	77	77	74	77	76	70	77	72	66	77	69	64	77	66	62	75	64	60	72	62	58	68	59	54	64	54	60	61	51	57	58	58	53	55	55	49	62	52	44
		20-27	Interior	85	85	85	85	85	85	85	85	85	85	85	85	85	85	82	85	84	78	85	80	75	85	74	69	85	69	64	80	65	61	76	62	58	72	60	54	69	57	50
			Exposed	85	85	82	85	83	77	85	79	73	85	75	70	85	72	67	84	69	64	81	66	62	76	62	58	72	59	53	68	56	47	65	52	57	62	60	52	60	57	46
		27-45	Interior	90	90	90	90	90	90	90	90	90	90	90	90	90	90	87	90	90	83	90	89	80	88	82	74	82	76	69	76	72	65	71	68	62	67	64	59	64	62	56
			Exposed	90	90	87	90	90	82	90	87	78	90	83	75	85	79	72	81	76	69	78	73	66	72	68	62	67	64	59	63	61	54	61	58	51	58	55	59	55	52	55
	D	0-7	Interior	77	77	77	77	77	77	77	77	77	77	77	77	77	77	71	77	77	69	77	76	66	77	71	62	76	67	59	72	63	55	68	61	52	64	58	59	62	54	56
			Exposed	77	77	71	77	77	68	77	75	65	77	72	63	77	69	61	76	66	59	73	64	57	68	61	52	64	57	59	61	53	55	58	60	52	55	58	47	52	54	42
		7-20	Interior	77	77	77	77	77	77	77	77	75	77	77	71	77	74	68	77	71	65	77	68	63	75	64	60	70	61	56	67	57	52	63	54	59	61	61	56	59	58	53
			Exposed	77	74	68	77	70	65	77	67	62	75	64	60	73	62	58	70	60	56	68	59	53	64	54	60	61	60	56	57	57	52	54	53	47	61	50	41	58	44	37
		20-27	Interior	87	87	87	87	87	87	87	87	83	87	85	79	87	81	75	87	77	72	87	74	69	84	69	64	79	64	60	75	61	56	71	59	52	67	55	46	65	52	57
			Exposed	87	81	75	87	76	71	87	73	67	85	69	64	81	66	62	79	64	60	76	62	58	71	59	53	67	55	45	64	51	55	61	59	51	58	55	42	55	52	37
		27-45	Interior	91	91	91	91	91	91	91	91	88	91	91	84	91	89	80	91	85	77	88	82	74	81	76	69	75	71	64	70	66	61	66	63	58	63	61	54	61	58	51
			Exposed	91	89	80	91	84	76	86	80	72	82	77	69	78	73	66	75	70	64	72	68	62	66	64	58	63	60	54	60	57	48	56	53	57	53	61	53	49	58	48
40	B	0-7	Interior	69	69	69	69	69	69	69	69	69	69	69	69	69	69	69	69	69	69	69	69	69	69	69	69	69	69	69	69	69	68	69	69	64	69	69	62	69	67	59
			Exposed	69	69	69	69	69	69	69	69	69	69	69	69	69	69	69	69	69	69	69	69	69	69	69	65	69	69	61	69	66	58	69	63	55	67	60	51	64	57	59
		7-20	Interior	71	71	71	71	71	71	71	71	71	71	71	71	71	71	71	71	71	71	71	71	71	71	71	71	71	71	69	71	70	65	71	66	62	71	63	59	70	61	56
			Exposed	71	71	71	71	71	71	71	71	71	71	71	71	71	71	71	71	71	68	71	71	66	71	66	62	71	63	59	69	60	55	66	56	51	63	53	59	61	60	56
		20-27	Interior	79	79	79	79	79	79	79	79	79	79	79	79	79	79	79	79	79	79	79	79	79	79	79	79	79	79	76	79	76	71	79	72	66	79	68	63	79	64	60
			Exposed	79	79	79	79	79	79	79	79	79	79	79	79	79	79	79	79	79	75	79	78	72	79	72	67	79	67	63	78	64	59	74	61	55	70	58	52	67	55	46
		27-45	Interior	85	85	85	85	85	85	85	85	85	85	85	85	85	85	85	85	85	85	85	85	85	85	85	85	85	85	81	84	84	76	81	79	71	79	75	68	75	71	64
			Exposed	85	85	85	85	85	85	85	85	85	85	85	85	85	85	84	85	85	81	85	85	77	85	79	72	79	74	67	74	70	63	69	66	60	65	63	57	63	60	54
	C	0-7	Interior	69	69	69	69	69	69	69	69	69	69	69	69	69	69	69	69	69	69	69	69	69	69	69	66	69	69	63	69	68	60	69	64	57	69	62	53	66	59	60
			Exposed	69	69	69	69	69	69	69	69	69	69	69	67	69	69	64	69	69	62	69	69	61	69	64	57	69	61	53	65	58	60	62	54	56	59	61	53	56	59	49
		7-20	Interior	71	71	71	71	71	71	71	71	71	71	71	71	71	71	71	71	71	71	71	71	68	71	68	63	71	64	60	71	61	57	68	58	53	65	55	60	62	52	58
			Exposed	71	71	71	71	71	70	71	71	66	71	69	64	71	66	62	71	64	60	71	62	58	68	59	54	64	54	60	61	51	57	58	58	53	55	55	49	62	52	44
		20-27	Interior	79	79	79	79	79	79	79	79	79	79	79	79	79	79	79	79	79	78	79	79	75	79	74	69	79	69	64	79	65	61	76	62	58	72	60	54	69	57	50
			Exposed	79	79	79	79	79	77	79	79	73	79	75	70	79	72	67	79	69	64	79	66	62	76	62	58	72	59	53	68	56	47	65	52	57	62	60	52	60	57	46
		27-45	Interior	85	85	85	85	85	85	85	85	85	85	85	85	85	85	85	85	85	83	85	85	80	83	82	74	80	76	69	76	72	65	71	68	62	67	64	59	64	62	56
			Exposed	85	85	85	85	85	82	85	85	78	85	83	75	85	79	72	81	76	69	78	73	66	72	68	62	67	64	59	63	61	54	61	58	51	58	55	59	55	52	55
	D	0-7	Interior	72	72	72	72	72	72	72	72	72	72	72	72	72	72	71	72	72	69	72	72	66	72	71	62	72	67	59	72	63	55	68	61	52	64	58	59	62	54	56
			Exposed	72	72	71	72	72	68	72	72	65	72	72	63	72	69	61	72	66	59	72	64	57	68	61	52	64	57	59	61	53	55	58	60	52	55	58	47	52	54	42
		7-20	Interior	74	74	74	74	74	74	74	74	74	74	74	71	74	74	68	74	71	65	74	68	63	74	64	60	70	61	56	67	57	52	63	54	59	61	61	56	59	58	53
			Exposed	74	74	68	74	70	65	74	67	62	74	64	60	73	62	58	70	60	56	68	59	53	64	54	60	61	60	56	57	57	52	54	53	47	61	50	41	58	44	37
		20-27	Interior	81	81	81	81	81	81	81	81	81	81	81	79	81	81	75	81	77	72	81	74	69	81	69	64	79	64	60	75	61	56	71	59	52	67	55	46	65	52	57
			Exposed	81	81	75	81	76	71	81	73	67	81	69	64	81	66	62	79	64	60	76	62	58	71	59	53	67	55	45	64	51	55	61	59	51	58	55	42	55	52	37
		27-45	Interior	87	87	87	87	87	87	87	87	87	87	87	84	87	87	80	87	85	77	85	82	74	81	76	69	75	71	64	70	66	61	66	63	58	63	61	54	61	58	51
			Exposed	87	87	80	87	84	76	86	80	72	82	77	69	78	73	66	75	70	64	72	68	62	66	64	58	63	60	54	60	57	48	56	53	57	53	61	53	49	58	48
50	B	0-7	Interior	63	63	63	63	63	63	63	63	63	63	63	63	63	63	63	63	63	63	63	63	63	63	63	63	63	63	63	63	63	63	63	63	63	63	63	62	63	63	59
			Exposed	63	63	63	63	63	63	63	63	63	63	63	63	63	63	63	63	63	63	63	63	63	63	63	63	63	63	61	63	63	58	63	63	55	63	60	51	63	57	59
		7-20	Interior	65	65	65	65	65	65	65	65	65	65	65	65	65	65	65	65	65	65	65	65	65	65	65	65	65	65	65	65	65	65	65	65	62	65	63	59	61	60	56
			Exposed	65	65	65	65	65	65	65	65	65	65	65	65	65	65	65	65	65	65	65	65	65	65	65	62	65	63	59	65	60	55	65	56	51	63	53	59	61	60	56
		20-27	Interior	73	73	73	73	73	73	73	73	73	73	73	73	73	73	73	73	73	73	73	73	73	73	73	73	73	73	73	73	73	71	73	72	66	73	68	63	73	64	60
			Exposed	73	73	73	73	73	73	73	73	73	73	73	73	73	73	73	73	73	73	73	73	72	73	72	67	73	67	63	73	64	59	73	61	55	70	58	52	67	55	46
		27-45	Interior	79	79	79	79	79	79	79	79	79	79	79	79	79	79	79	79	79	79	79	79	79	79	79	79	79	79	79	78	78	76	76	76	71	74	74	68	72	71	64
			Exposed	79	79	79	79	79	79	79	79	79	79	79	79	79	79	79	79	79	79	79	79	77	79	79	72	79	74	67	74	70	63	69	66	60	65	63	57	63	60	54
	C	0-7	Interior	63	63	63	63	63	63	63	63	63	63	63	63	63	63	63	63	63	63	63	63	63	63	63	63	63	63	63	63	63	60	63	63	57	63	62	53	63	59	60
			Exposed	63	63	63	63	63	63	63	63	63	63	63	63	63	63	63	63	63	62	63	63	61	63	63	57	63	61	53	63	58	60	62	54	56	59	61	53	56	59	49
		7-20	Interior	65	65	65	65	65	65	65	65	65	65	65	65	65	65	65	65	65	65	65	65	65	65	65	63	65	64	60	65	61	57	64	58	53	63	55	60	62	52	58
			Exposed	65	65	65	65	65	65	65	65	65	65	65	64	65	65	62	65	64	60	65	62	58	65	59	54	64	54	60	61	51	57	58	58	53	55	55	49	62	52	44
		20-27	Interior	73	73	73	73	73	73	73	73	73	73	73	73	73	73	73	73	73	73	73	73	73	73	73	69	73	69	64	73	65	61	72	62	58	71	60	54	69	57	50
			Exposed	73	73	73	73	73	73	73	73	73	73	73	70	73	72	67	73	69	64	73	66	62	73	62	58	72	59	53	68	56	47	65	52	57	62	60	52	60	57	46
		27-45	Interior	79	79	79	79	79	79	79	79	79	79	79	79	79	79	79	79	79	79	79	79	79	77	77	74	75	75	69	72	72	65	70	68	62	67	64	59	64	62	56
			Exposed	79	79	79	79	79	79	79	79	78	79	79	75	79	79	72	79	76	69	78	73	66	72	68	62	67	64	59	63	61	54	61	58	51	58	55	59	55	52	55
	D	0-7	Interior	66	66	66	66	66	66	66	66	66	66	66	66	66	66	66	66	66	66	66	66	66	66	66	62	66	66	59	66	63	55	66	61	52	64	58	59	62	54	56
			Exposed	66	66	66	66	66	66	66	66	65	66	66	63	66	66	61	66	66	59	66	64	57	66	61	52	64	57	59	61	53	55	58	60	52	55	58	47	52	54	42
		7-20	Interior	68	68	68	68	68	68	68	68	68	68	68	68	68	68	68	68	68	65	68	68	63	68	64	60	68	61	56	66	57	52	63	54	59	61	61	56	59	58	53
			Exposed	68	68	68	68	68	65	68	67	62	68	64	60	68	62	58	68	60	56	68	59	53	64	54	60	61	60	56	57	57	52	54	53	47	61	50	41	58	44	37
		20-27	Interior	76	76	76	76	76	76	76	76	76	76	76	76	76	76	75	76	76	72	76	74	69	76	69	64	76	64	60	74	61	56	71	59	52	67	55	46	65	52	57
			Exposed	76	76	75	76	76	71	76	73	67	76	69	64	76	66	62	76	64	60	76	62	58	71	59	53	67	55	45	64	51	55	61	59	51	58	55	42	55	52	37
		27-45	Interior	82	82	82	82	82	82	82	82	82	82	82	82	82	82	80	81	81	77	80	80	74	77	76	69	74	71	64	70	66	61	66	63	58	63	61	54	61	58	51
			Exposed	82	82	80	82	82	76	82	80	72	82	77	69	78	73	66	75	70	64	72	68	62	66	64	58	63	60	54	60	57	48	56	53	57	53	61	53	49	58	48

* Cells with an astrisks indicates that the L-foot must be oriented in the Y- direction as indicated in the image.

10 Highlighted cell indicate 3-rail system span. Contact Unirac Engineering Services for support.

~~10~~ Highlighted cell with strikethrough indicate 3-rail system span and module clamp allowable capacity exceeds with 3-rails. 4-Rail system required. Contact Unirac Engineering Services for support.

UNIRAC

ASCE 7-16	II	30 ft	Ss = 3.00	23 sq.ft	LANDSCAPE	CROSS-SLOPE	NXT	NXT COMBO	Stronghold BUTYL Rafter #14S
Design Standard	Risk Category	Roof Height	Seismic	Module Area	Orientation	Rail Direction	Rail Type	Clamp	Attachment

SPAN TABLES

Maximum Allowable Rail Spans for Rooftop Solar Panels Parallel to the Roof Surface (inches)

Ground Snow Load (psf)	Wind Exposure Category	Roof Tilt Angle (deg)	Panel Exposure	Basic Wind Speed (mph)																																						
				90			95			100			105			110			115			120			130			140			150			160			170			180		
				Roof Wind Zone																																						
				1	2	3	1	2	3	1	2	3	1	2	3	1	2	3	1	2	3	1	2	3	1	2	3	1	2	3	1	2	3	1	2	3	1	2	3	1	2	3
60	B	0-7	Interior	57	57	57	57	57	57	57	57	57	57	57	57	57	57	57	57	57	57	57	57	57	57	57	57	57	57	57	57	57	57	57	57	57	57	57	57	57	57	57
			Exposed	57	57	57	57	57	57	57	57	57	57	57	57	57	57	57	57	57	57	57	57	57	57	57	57	57	57	57	57	57	57	57	57	55	57	57	51	57	57	59
		7-20	Interior	60	60	60	60	60	60	60	60	60	60	60	60	60	60	60	60	60	60	60	60	60	60	60	60	60	60	60	60	60	60	60	60	60	60	60	59	60	60	56
			Exposed	60	60	60	60	60	60	60	60	60	60	60	60	60	60	60	60	60	60	60	60	60	60	60	60	60	60	59	60	60	55	60	56	51	60	53	59	60	60	56
		20-27	Interior	69	69	69	69	69	69	69	69	69	69	69	69	69	69	69	69	69	69	69	69	69	69	69	69	69	69	69	69	69	69	69	69	66	69	68	63	69	64	60
			Exposed	69	69	69	69	69	69	69	69	69	69	69	69	69	69	69	69	69	69	69	69	69	69	69	67	69	67	63	69	64	59	69	61	55	69	58	52	67	55	46
		27-45	Interior	75	75	75	75	75	75	75	75	75	75	75	75	75	75	75	75	75	75	75	75	75	75	75	75	75	75	75	73	73	73	72	72	71	70	70	68	68	68	64
			Exposed	75	75	75	75	75	75	75	75	75	75	75	75	75	75	75	75	75	75	75	75	75	75	75	72	75	74	67	73	70	63	69	66	60	65	63	57	63	60	54
	C	0-7	Interior	57	57	57	57	57	57	57	57	57	57	57	57	57	57	57	57	57	57	57	57	57	57	57	57	57	57	57	57	57	57	57	57	57	57	57	53	57	57	60
			Exposed	57	57	57	57	57	57	57	57	57	57	57	57	57	57	57	57	57	57	57	57	57	57	57	53	57	57	60	57	54	56	57	61	53	56	59	49			
		7-20	Interior	60	60	60	60	60	60	60	60	60	60	60	60	60	60	60	60	60	60	60	60	60	60	60	60	60	60	57	60	58	53	59	55	60	58	52	58			
			Exposed	60	60	60	60	60	60	60	60	60	60	60	60	60	60	60	60	60	60	60	60	58	60	59	54	60	54	60	60	51	57	58	58	53	55	55	49	62	52	44
		20-27	Interior	69	69	69	69	69	69	69	69	69	69	69	69	69	69	69	69	69	69	69	69	69	69	69	69	69	69	64	69	65	61	68	62	58	66	60	54	65	57	50
			Exposed	69	69	69	69	69	69	69	69	69	69	69	69	69	69	67	69	69	64	69	66	62	69	62	58	69	59	53	68	56	47	65	52	57	62	60	52	60	57	46
		27-45	Interior	75	75	75	75	75	75	75	75	75	75	75	75	75	75	75	75	75	75	75	75	75	73	73	73	71	71	69	68	68	65	66	66	62	64	64	59	63	62	56
			Exposed	75	75	75	75	75	75	75	75	75	75	75	75	75	75	72	75	75	69	75	73	66	72	68	62	67	64	59	63	61	54	61	58	51	58	55	59	55	52	55
	D	0-7	Interior	60	60	60	60	60	60	60	60	60	60	60	60	60	60	60	60	60	60	60	60	60	60	60	60	60	60	59	60	60	55	60	60	52	60	58	59	60	54	56
			Exposed	60	60	60	60	60	60	60	60	60	60	60	60	60	60	60	60	60	59	60	60	57	60	60	52	60	57	59	60	53	55	58	60	52	55	58	47	52	54	42
		7-20	Interior	63	63	63	63	63	63	63	63	63	63	63	63	63	63	63	63	63	63	63	63	63	63	63	60	63	61	56	62	57	52	61	54	59	60	61	56	59	58	53
			Exposed	63	63	63	63	63	63	63	62	63	63	60	63	62	58	63	60	56	63	59	53	63	54	60	61	60	56	57	57	57	52	54	53	47	61	50	41	58	44	37
		20-27	Interior	72	72	72	72	72	72	72	72	72	72	72	72	72	72	72	72	72	72	72	72	69	72	69	64	71	64	60	70	61	56	68	59	52	67	55	46	65	52	57
			Exposed	72	72	72	72	72	71	72	72	67	72	69	64	72	66	62	72	64	60	72	62	58	71	59	53	67	55	45	64	51	55	61	59	51	58	55	42	55	52	37
		27-45	Interior	78	78	78	78	78	78	78	78	78	78	78	78	78	78	78	76	76	76	75	75	74	73	73	69	70	70	64	68	66	61	65	63	58	63	61	54	61	58	51
			Exposed	78	78	78	78	78	76	78	78	72	78	77	69	78	73	66	75	70	64	72	68	62	66	64	58	63	60	54	60	57	48	56	53	57	53	61	53	49	58	48
70	B	0-7	Interior	53	53	53	53	53	53	53	53	53	53	53	53	53	53	53	53	53	53	53	53	53	53	53	53	53	53	53	53	53	53	53	53	53	53	53	53	53	53	53
			Exposed	53	53	53	53	53	53	53	53	53	53	53	53	53	53	53	53	53	53	53	53	53	53	53	53	53	53	53	53	53	53	53	53	53	53	53	51	53	53	59
		7-20	Interior	56	56	56	56	56	56	56	56	56	56	56	56	56	56	56	56	56	56	56	56	56	56	56	56	56	56	56	56	56	56	56	56	56	56	56	56	56	56	56
			Exposed	56	56	56	56	56	56	56	56	56	56	56	56	56	56	56	56	56	56	56	56	56	56	56	56	56	56	56	56	56	55	56	56	51	56	53	59	56	60	56
		20-27	Interior	65	65	65	65	65	65	65	65	65	65	65	65	65	65	65	65	65	65	65	65	65	65	65	65	65	65	65	65	65	65	65	65	65	65	65	63	65	64	60
			Exposed	65	65	65	65	65	65	65	65	65	65	65	65	65	65	65	65	65	65	65	65	65	65	65	65	65	65	63	65	64	59	65	61	55	65	58	52	65	55	46
		27-45	Interior	71	71	71	71	71	71	71	71	71	71	71	71	71	71	71	71	71	71	71	71	71	71	71	71	71	71	71	69	69	69	68	68	68	66	66	66	65	65	64
			Exposed	71	71	71	71	71	71	71	71	71	71	71	71	71	71	71	71	71	71	71	71	71	71	71	71	71	71	67	69	69	63	68	66	60	65	63	57	63	60	54
	C	0-7	Interior	53	53	53	53	53	53	53	53	53	53	53	53	53	53	53	53	53	53	53	53	53	53	53	53	53	53	53	53	53	53	53	53	53	53	53	53	53	53	60
			Exposed	53	53	53	53	53	53	53	53	53	53	53	53	53	53	53	53	53	53	53	53	53	53	53	53	53	53	53	53	53	60	53	53	56	53	61	53	53	59	49
		7-20	Interior	56	56	56	56	56	56	56	56	56	56	56	56	56	56	56	56	56	56	56	56	56	56	56	56	56	56	56	56	56	56	56	56	53	56	55	60	55	52	58
			Exposed	56	56	56	56	56	56	56	56	56	56	56	56	56	56	56	56	56	56	56	56	56	56	56	54	56	54	60	56	51	57	56	58	53	55	55	49	62	52	44
		20-27	Interior	65	65	65	65	65	65	65	65	65	65	65	65	65	65	65	65	65	65	65	65	65	65	65	65	65	65	64	65	65	61	64	62	58	63	60	54	62	57	50
			Exposed	65	65	65	65	65	65	65	65	65	65	65	65	65	65	65	65	65	64	65	65	62	65	62	58	65	59	53	65	56	47	64	52	57	62	60	52	60	57	46
		27-45	Interior	71	71	71	71	71	71	71	71	71	71	71	71	71	71	71	71	71	71	71	71	71	69	69	69	67	67	67	65	65	65	64	64	62	62	62	59	60	60	56
			Exposed	71	71	71	71	71	71	71	71	71	71	71	71	71	71	71	71	71	69	71	71	66	69	68	62	67	64	59	63	61	54	61	58	51	58	55	59	55	52	55
	D	0-7	Interior	56	56	56	56	56	56	56	56	56	56	56	56	56	56	56	56	56	56	56	56	56	56	56	56	56	56	56	56	56	55	56	56	52	56	56	59	56	54	56
			Exposed	56	56	56	56	56	56	56	56	56	56	56	56	56	56	56	56	56	56	56	56	56	56	56	52	56	56	59	56	53	55	56	60	52	55	58	47	52	54	42
		7-20	Interior	58	58	58	58	58	58	58	58	58	58	58	58	58	58	58	58	58	58	58	58	58	58	58	58	58	58	56	58	57	52	58	54	59	57	61	56	56	58	53
			Exposed	58	58	58	58	58	58	58	58	58	58	58	58	58	58	58	58	58	56	58	58	53	58	54	60	58	60	56	57	57	52	54	53	47	61	50	41	58	44	37
		20-27	Interior	68	68	68	68	68	68	68	68	68	68	68	68	68	68	68	68	68	68	68	68	68	68	68	64	67	64	60	66	61	56	65	59	52	63	55	46	62	52	57
			Exposed	68	68	68	68	68	68	68	67	68	68	64	68	66	62	68	64	60	68	62	58	68	59	53	67	55	45	64	51	55	61	59	51	58	55	42	55	52	37	
		27-45	Interior	74	74	74	74	74	74	74	74	74	74	74	73	73	73	72	72	72	71	71	71	69	69	69	67	67	64	65	65	61	63	63	58	61	61	54	59	58	51	
			Exposed	74	74	74	74	74	74	74	74	72	74	74	69	73	73	66	72	70	64	71	68	62	66	64	58	63	60	54	60	57	48	56	53	57	53	61	53	49	58	48
80	B	0-7	Interior	50	50	50	50	50	50	50	50	50	50	50	50	50	50	50	50	50	50	50	50	50	50	50	50	50	50	50	50	50	50	50	50	50	50	50	50	50	50	50
			Exposed	50	50	50	50	50	50	50	50	50	50	50	50	50	50	50	50	50	50	50	50	50	50	50	50	50	50	50	50	50	50	50	50	50	50	50	50	50	50	59
		7-20	Interior	52	52	52	52	52	52	52	52	52	52	52	52	52	52	52	52	52	52	52	52	52	52	52	52	52	52	52	52	52	52	52	52	52	52	52	52	52	52	52
			Exposed	52	52	52	52	52	52	52	52	52	52	52	52	52	52	52	52	52	52	52	52	52	52	52	52	52	52	52	52	52	52	52	52	51	52	52	59	52	60	56
		20-27	Interior	61	61	61	61	61	61	61	61	61	61	61	61	61	61	61	61	61	61	61	61	61	61	61	61	61	61	61	61	61	61	61	61	61	61	61	61	61	61	60
			Exposed	61	61	61	61	61	61	61	61	61	61	61	61	61	61	61	61	61	61	61	61	61	61	61	61	61	61	61	61	61	59	61	61	55	61	58	52	61	55	46
		27-45	Interior	78*	78*	78*	78*	78*	78*	78*	78*	78*	78*	78*	78*	78*	78*	78*	78*	78*	78*	78*	78*	78*	78*	78*	78*	78*	78*	78*	84*	84*	66	65	65	65	64	64	64	62	62	62
			Exposed	78*	78*	78*	78*	78*	78*	78*	78*	78*	78*	78*	78*	78*	78*	78*	78*	78*	78*	78*	78*	68	78*	78*	68	78*	68	67	66	66	63	65	65	60	64	63	57	62	60	54
	C	0-7	Interior	50	50	50	50	50	50	50	50	50	50	50	50	50	50	50	50	50	50	50	50	50	50	50	50	50	50	50	50	50	50	50	50	50	50	50	50	50	50	60
			Exposed	50	50	50	50	50	50	50	50	50	50	50	50	50	50	50	50	50	50	50	50	50	50	50	50	50	50	50	50	50	60	50	50	56	50	61	53	50	59	49
		7-20	Interior	52	52	52	52	52	52	52	52	52	52	52	52	52	52	52	52	52	52	52	52	52	52	52	52	52	52	52	52	52	52	52	52	52	52	52	60	52	52	58
			Exposed	52	52	52	52	52	52	52	52	52	52	52	52	52	52	52	52	52	52	52	52	52	52	52	52	52	52	60	52	51	57	52	58	53	52	55	49	62	52	44
		20-27	Interior	61	61	61	61	61	61	61	61	61	61	61	61	61	61	61	61	61	61	61	61	61	61	61	61	61	61	61	61	61	61	61	61	58	60	60	54	59	57	50
			Exposed	61	61	61	61	61	61	61	61	61	61	61	61	61	61	61	61	61	61	61	61	61	61	61	58	61	59	53	61	56	47	61	52	57	60	60	52	59	57	46
		27-45	Interior	78*	78*	78*	78*	78*	78*	78*	78*	78*	78*	78*	78*	78*	78*	78*	78*	78*	78*	78*	78*	78*	78*	78*	66	66	66	64	64	64	63	63	61	61	60	60	59	58	58	56
			Exposed	78*	78*	78*	78*	78*	78*	78*	78*	78*	78*	78*	68	78*	78*	68	78*	68	68	78*	67	66	66	66	62	64	64	59	63	61	54	61	58	51	58	55	59	55	52	55
	D	0-7	Interior	53	53	53	53	53	53	53	53	53	53	53	53	53	53	53	53	53	53	53	53	53	53	53	53	53	53	53	53	53	53	53	53	52	53	53	59	53	53	56
			Exposed	53	53	53	53	53	53	53	53	53	53	53	53	53	53	53	53	53	53	53	53	53	53	53	52	53	53	59	53	53	55	53	60	52	53	58	47	52	54	42
		7-20	Interior	55	55	55	55	55	55	55	55	55	55	55	55	55	55	55	55	55	55	55	55	55	55	55	55	55	55	55	55	55	52	55	54	59	54	61	56	54	58	53
			Exposed	55	55	55	55	55	55	55	55	55	55	55	55	55	55	55	55	55	55	55	55	53	55	54	60	55	60	56	55	57	52	54	53	47	61	50	41	58	44	37
		20-27	Interior	64	64	64	64	64	64	64	64	64	64	64	64	64	64	64	64	64	64	64	64	64	64	64	64	64	64	60	63	61	56	62	59	52	61	55	46	60	52	57
			Exposed	64	64	64	64	64	64	64	64	64	64	64	64	64	62	64	64	60	64	62	58	64	59	53	64	55	45	63	51	55	61	59	51	58	55	42	55	52	37	
		27-45	Interior	71	71	71	71	71	71	71	71	71	71	71	70	70	70	69	69	69	68	68	68	66	66	66	64	64	64	63	63	63	61	61	61	58	59	59	54	58	58	51
			Exposed	71	71	71	71	71	71	71	71	71	71	69	70	70	66	69	69	64	68	68	62	66	64	58	63	60	54	60	57	48	56	53	57	53	61	53	49	58	48	

* Cells with an astrisks indicates that the L-foot must be oriented in the Y- direction as indicated in the image.

10 Highlighted cell indicate 3-rail system span. Contact Unirac Engineering Services for support.

~~10~~ Highlighted cell with strikethrough indicate 3-rail system span and module clamp allowable capacity exceeds with 3-rails. 4-Rail system required. Contact Unirac Engineering Services for support.

UNIRAC

ASCE 7-16	II	30 ft	Ss = 3.00	23 sq.ft	LANDSCAPE	CROSS-SLOPE	NXT	NXT COMBO	Stronghold BUTYL Rafter #14S
Design Standard	Risk Category	Roof Height	Seismic	Module Area	Orientation	Rail Direction	Rail Type	Clamp	Attachment

SPAN TABLES

Maximum Allowable Rail Spans for Rooftop Solar Panels Parallel to the Roof Surface (inches)

Ground Snow Load (psf)	Wind Exposure Category	Roof Tilt Angle (deg)	Panel Exposure	Basic Wind Speed (mph)																																						
				90			95			100			105			110			115			120			130			140			150			160			170			180		
				Roof Wind Zone																																						
				1	2	3	1	2	3	1	2	3	1	2	3	1	2	3	1	2	3	1	2	3	1	2	3	1	2	3	1	2	3	1	2	3	1	2	3	1	2	3
90	B	0-7	Interior	47	47	47	47	47	47	47	47	47	47	47	47	47	47	47	47	47	47	47	47	47	47	47	47	47	47	47	47	47	47	47	47	47	47	47	47	47	47	47
			Exposed	47	47	47	47	47	47	47	47	47	47	47	47	47	47	47	47	47	47	47	47	47	47	47	47	47	47	47	47	47	47	47	47	47	47	47	47	47	47	58
		7-20	Interior	49	49	49	49	49	49	49	49	49	49	49	49	49	49	49	49	49	49	49	49	49	49	49	49	49	49	49	49	49	49	49	49	49	49	49	49	49	49	49
			Exposed	49	49	49	49	49	49	49	49	49	49	49	49	49	49	49	49	49	49	49	49	49	49	49	49	49	49	49	49	49	49	49	49	49	49	49	59	49	60	56
		20-27	Interior	57	57	57	57	57	57	57	57	57	57	57	57	57	57	57	57	57	57	57	57	57	57	57	57	57	57	57	57	57	57	57	57	57	57	57	57	57	57	57
			Exposed	57	57	57	57	57	57	57	57	57	57	57	57	57	57	57	57	57	57	57	57	57	57	57	57	57	57	57	57	57	57	57	57	55	57	57	52	57	55	46
		27-45	Interior	72*	72*	72*	72*	72*	72*	72*	72*	72*	72*	72*	72*	72*	72*	72*	72*	72*	72*	72*	72*	72*	72*	72*	72*	71*	71*	71*	70*	70*	70*	72*	72*	72*	73*	73*	61	60	60	60
			Exposed	72*	72*	72*	72*	72*	72*	72*	72*	72*	72*	72*	72*	72*	72*	72*	72*	72*	72*	72*	72*	72*	72*	72*	72*	71*	71*	64	70*	70*	63	62	62	60	61	61	57	60	60	54
	C	0-7	Interior	47	47	47	47	47	47	47	47	47	47	47	47	47	47	47	47	47	47	47	47	47	47	47	47	47	47	47	47	47	47	47	47	47	47	47	47	47	47	58
			Exposed	47	47	47	47	47	47	47	47	47	47	47	47	47	47	47	47	47	47	47	47	47	47	47	47	47	47	47	47	47	58	47	47	56	47	58	53	47	58	49
		7-20	Interior	49	49	49	49	49	49	49	49	49	49	49	49	49	49	49	49	49	49	49	49	49	49	49	49	49	49	49	49	49	49	49	49	49	49	49	60	49	49	58
			Exposed	49	49	49	49	49	49	49	49	49	49	49	49	49	49	49	49	49	49	49	49	49	49	49	49	49	49	60	49	49	57	49	58	53	49	55	49	60	52	44
		20-27	Interior	57	57	57	57	57	57	57	57	57	57	57	57	57	57	57	57	57	57	57	57	57	57	57	57	57	57	57	57	57	57	57	57	57	57	57	54	57	57	50
			Exposed	57	57	57	57	57	57	57	57	57	57	57	57	57	57	57	57	57	57	57	57	57	57	57	53	57	56	47	57	52	57	57	60	52	57	57	46			
		27-45	Interior	72*	72*	72*	72*	72*	72*	72*	72*	72*	72*	72*	72*	72*	72*	72*	72*	72*	72*	71*	71*	71*	69*	69*	69*	71*	71*	62	61	61	61	59	59	59	58	58	58	57	57	56
			Exposed	72*	72*	72*	72*	72*	72*	72*	72*	72*	72*	72*	72*	72*	72*	69*	71*	71*	64	69*	63	62	62	62	59	61	61	54	59	58	51	58	55	59	55	52	55			
	D	0-7	Interior	50	50	50	50	50	50	50	50	50	50	50	50	50	50	50	50	50	50	50	50	50	50	50	50	50	50	50	50	50	50	50	50	50	50	50	59	50	50	56
			Exposed	50	50	50	50	50	50	50	50	50	50	50	50	50	50	50	50	50	50	50	50	50	50	50	59	50	50	55	50	60	52	50	58	47	50	54	42			
		7-20	Interior	52	52	52	52	52	52	52	52	52	52	52	52	52	52	52	52	52	52	52	52	52	52	52	52	52	52	52	52	52	52	52	52	59	52	61	56	51	58	53
			Exposed	52	52	52	52	52	52	52	52	52	52	52	52	52	52	52	52	52	52	52	52	52	52	52	60	52	60	56	52	57	52	52	53	47	61	50	41	58	44	37
		20-27	Interior	60	60	60	60	60	60	60	60	60	60	60	60	60	60	60	60	60	60	60	60	60	60	60	60	60	60	60	60	60	56	59	59	52	58	55	46	57	52	57
			Exposed	60	60	60	60	60	60	60	60	60	60	60	60	60	60	60	60	60	60	60	60	58	60	59	53	60	55	45	60	51	55	59	59	51	58	55	42	55	52	37
		27-45	Interior	78*	78*	78*	78*	78*	78*	78*	78*	78*	78*	78*	78*	78*	78*	78*	80*	80*	66	83*	65	65	64	64	64	62	62	62	61	61	61	59	59	58	58	58	54	56	56	51
			Exposed	78*	78*	78*	78*	78*	68	78*	78*	68	78*	68	68	78*	67	66	66	66	64	65	65	62	64	64	58	62	60	54	60	57	48	56	53	57	53	61	53	49	58	48
100	B	0-7	Interior	45	45	45	45	45	45	45	45	45	45	45	45	45	45	45	45	45	45	45	45	45	45	45	45	45	45	45	45	45	45	45	45	45	45	45	45	45	45	45
			Exposed	45	45	45	45	45	45	45	45	45	45	45	45	45	45	45	45	45	45	45	45	45	45	45	45	45	45	45	45	45	45	45	45	45	45	45	45	45	45	55
		7-20	Interior	47	47	47	47	47	47	47	47	47	47	47	47	47	47	47	47	47	47	47	47	47	47	47	47	47	47	47	47	47	47	47	47	47	47	47	47	47	47	47
			Exposed	47	47	47	47	47	47	47	47	47	47	47	47	47	47	47	47	47	47	47	47	47	47	47	47	47	47	47	47	47	47	47	47	47	47	47	57	47	57	56
		20-27	Interior	55	55	55	55	55	55	55	55	55	55	55	55	55	55	55	55	55	55	55	55	55	55	55	55	55	55	55	55	55	55	55	55	55	55	55	55	55	55	55
			Exposed	55	55	55	55	55	55	55	55	55	55	55	55	55	55	55	55	55	55	55	55	55	55	55	55	55	55	55	55	55	55	55	55	55	55	55	52	55	55	46
		27-45	Interior	65*	65*	65*	65*	65*	65*	65*	65*	65*	65*	65*	65*	65*	65*	65*	65*	65*	65*	65*	65*	65*	65*	65*	65*	65*	65*	65*	64*	64*	64*	63*	63*	63*	62*	62*	62*	63*	63*	63*
			Exposed	65*	65*	65*	65*	65*	65*	65*	65*	65*	65*	65*	65*	65*	65*	65*	65*	65*	65*	65*	65*	65*	65*	65*	65*	65*	65*	65*	64*	64*	63*	63*	63*	60	62*	62*	57	63*	58	54
	C	0-7	Interior	45	45	45	45	45	45	45	45	45	45	45	45	45	45	45	45	45	45	45	45	45	45	45	45	45	45	45	45	45	45	45	45	45	45	45	45	45	45	55
			Exposed	45	45	45	45	45	45	45	45	45	45	45	45	45	45	45	45	45	45	45	45	45	45	45	55	45	45	55	45	55	53	45	55	49						
		7-20	Interior	47	47	47	47	47	47	47	47	47	47	47	47	47	47	47	47	47	47	47	47	47	47	47	47	47	47	47	47	47	47	47	47	47	47	47	57	47	47	57
			Exposed	47	47	47	47	47	47	47	47	47	47	47	47	47	47	47	47	47	47	47	47	47	47	47	57	47	47	57	47	57	53	47	55	49	57	52	44			
		20-27	Interior	55	55	55	55	55	55	55	55	55	55	55	55	55	55	55	55	55	55	55	55	55	55	55	55	55	55	55	55	55	55	55	55	55	55	55	54	55	55	50
			Exposed	55	55	55	55	55	55	55	55	55	55	55	55	55	55	55	55	55	55	55	55	55	55	55	53	55	55	47	55	52	57	55	60	52	55	57	46			
		27-45	Interior	65*	65*	65*	65*	65*	65*	65*	65*	65*	65*	65*	65*	65*	65*	65*	65*	65*	65*	65*	65*	65*	64*	64*	64*	62*	62*	62*	64*	64*	64*	64*	64*	57	56	56	56	55	55	55
			Exposed	65*	65*	65*	65*	65*	65*	65*	65*	65*	65*	65*	65*	65*	65*	65*	65*	65*	65*	65*	65*	65*	64*	64*	62*	62*	62*	59	63*	59	54	57	57	51	56	55	59	55	52	55
	D	0-7	Interior	47	47	47	47	47	47	47	47	47	47	47	47	47	47	47	47	47	47	47	47	47	47	47	47	47	47	47	47	47	47	47	47	47	47	47	58	47	47	56
			Exposed	47	47	47	47	47	47	47	47	47	47	47	47	47	47	47	47	47	47	47	47	47	47	47	58	47	47	55	47	58	52	47	58	47	47	54	42			
		7-20	Interior	49	49	49	49	49	49	49	49	49	49	49	49	49	49	49	49	49	49	49	49	49	49	49	49	49	49	49	49	49	49	49	49	59	49	61	56	49	58	53
			Exposed	49	49	49	49	49	49	49	49	49	49	49	49	49	49	49	49	49	49	49	49	60	49	60	56	49	57	52	49	53	47	60	50	41	58	44	37			
		20-27	Interior	57	57	57	57	57	57	57	57	57	57	57	57	57	57	57	57	57	57	57	57	57	57	57	57	57	57	56	57	57	52	56	55	46	55	52	57			
			Exposed	57	57	57	57	57	57	57	57	57	57	57	57	57	57	57	57	57	57	57	57	57	57	57	53	57	55	45	57	51	55	57	59	51	56	55	42	55	52	37
		27-45	Interior	72*	72*	72*	72*	72*	72*	72*	72*	72*	72*	72*	72*	71*	71*	71*	70*	70*	70*	69*	69*	69*	74*	74*	62	60	60	60	59	59	59	57	57	57	56	56	54	55	55	51
			Exposed	72*	72*	72*	72*	72*	72*	72*	72*	72*	72*	72*	69*	71*	71*	64	70*	70*	64	69*	63	62	62	62	58	60	60	54	59	57	48	56	53	57	53	61	53	49	58	48

* Cells with an astrisks indicates that the L-foot must be oriented in the Y- direction as indicated in the image.

10 Highlighted cell indicate 3-rail system span. Contact Unirac Engineering Services for support.

~~10~~ Highlighted cell with strikethrough indicate 3-rail system span and module clamp allowable capacity exceeds with 3-rails. 4-Rail system required. Contact Unirac Engineering Services for support.