Design Criteria for Span Tables:

Values in the maximum allowable rail span tables provided herein are subject to the following general criteria and additional criteria shown on individual span tables sheets. Values in span tables are based on the same engineering methodology and calculation algorithms used for U-Builder and are provided here for reference.

Building Assumptions

- Building Risk Category: II
- Mean Roof Height: 30 ft
- Roof Pitch: 0°-45°
- Site Elevation: 0 ft

Wind Design Assumptions

- Wind loads used are based on ASCE 7-22 Sec. 29.4.4
- Exposure Category B, C, or D
- Basic Wind Speed = 90 – 180 mph
- Level terrain. Topographic factor, kzt = 1.0
- γE = 1.0 for 'Interior' spans, γE = 1.5 for 'Exposed' spans (ASCE 7-22, Fig. 29.4-7)

Snow Design Assumptions

- Ground Snow Load = 0-100 psf
- Exposure Factor coefficients of Partially Exposed condition
- Thermal Factor = 1.0
- Results based on uniform snow load

Seismic Design Assumptions

- 0.2-s Spectral Response Acceleration
- S_S = 1.25 and 3 with Sds = 1, 2.4 respectively per criteria shown on individual span tables sheets.
- S_1 = 0.5 & Sd1 = 0.6
- Seismic site class D

Array Assumptions

- Module orientation and Rail direction per criteria shown on individual span tables sheets.
- Maximum module dimensions of 40.1" x 67" (~19 sq.ft, 47.65 lbs) and 41" x 80" (~23 sq.ft, 58.6 lbs) per criteria shown on individual span tables sheets.
- Minimum distance between modules and roof edge is at least twice the module height above roof surface.
- Modules are parallel to roof surface and maximum height above roof surface is 5" to 10" depending on attachment type.
- Gaps between module rows and columns is 0.25" in to 1" depending on clamp type.
- The most restrictive of all roof zone spans shall be used when any part of the module is attributed to that span.
- 'Exposed' spans as defined in ASCE 7-22 sec. 29.4.4 shall be used when any part of an exposed module or panel as is attributed to that span.

Span Tables

Zone should be considered as per ASCE 7-22, Fig. 30.3-2A to 30.3-2D

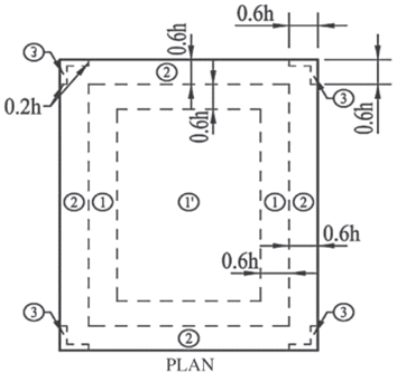

Gable Roofs θ ≤ 7°

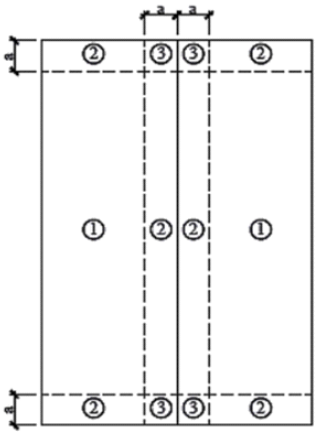

Gable Roofs 7°< θ ≤ 27°

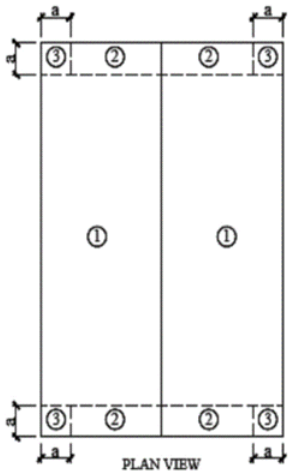

Gable Roofs 27°< θ ≤ 45°

Rails can be installed in these possible orientations.

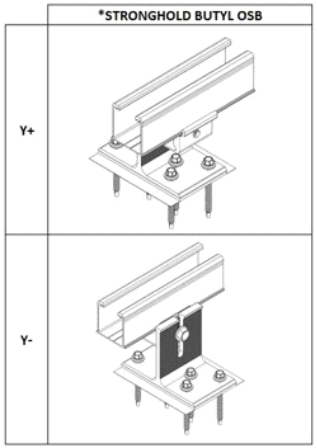

UNIRAC

ASCE 7-22	II	30 ft	Ss = 1.25	19 sq.ft	PORTRAIT	CROSS-SLOPE	NXT	NXT COMBO	Stronghold BUTYL OSB
Design Standard	Risk Category	Roof Height	Seismic	Module Area	Orientation	Rail Direction	Rail Type	Clamp	Attachment

SPAN TABLES

Maximum Allowable Rail Spans for Rooftop Solar Panels Parallel to the Roof Surface (inches)

Ground Snow Load (psf)	Wind Exposure Category	Roof Tilt Angle (deg)	Panel Exposure	Basic Wind Speed (mph)																																								
				90			95			100			105			110			115			120			130			140			150			160			170			180		
				Roof Wind Zone																																								
				1	2	3	1	2	3	1	2	3	1	2	3	1	2	3	1	2	3	1	2	3	1	2	3	1	2	3	1	2	3	1	2	3	1	2	3	1	2	3
0	B	0-7	Interior	34	34	33	34	34	29	34	34	26	34	34	23	34	30	21	34	27	19	34	25	17	29	21	15	25	18	12	21	15	11	18	13	9	16	12	8	14	10	7
			Exposed	34	30	21	34	27	19	33	24	17	30	21	15	27	19	13	24	17	12	22	16	11	19	13	9	16	11	8	14	10	7	12	9	6	10	7	5	9	7	7
		7-20	Interior	34	34	29	34	34	25	34	31	23	34	28	20	34	25	18	32	23	17	29	21	15	24	17	13	21	15	11	18	13	9	15	11	8	13	10	7	12	9	6
			Exposed	34	25	18	31	22	16	28	20	15	25	18	13	22	16	12	20	15	11	19	13	10	16	11	8	13	10	7	11	8	6	10	7	5	9	6	7	8	6	6
		20-27	Interior	35	35	35	35	35	31	35	34	28	35	30	25	35	27	22	35	25	20	35	23	18	33	19	16	28	16	13	24	14	11	21	12	10	18	11	9	16	9	8
			Exposed	35	27	22	35	24	20	35	22	18	34	19	16	31	17	14	28	16	13	25	14	12	21	12	10	18	10	9	16	9	7	14	8	6	12	7	6	10	6	5
		27-45	Interior	35	35	35	35	35	35	35	35	33	35	35	30	35	34	27	35	31	24	32	28	22	27	24	19	23	20	16	20	17	14	17	15	12	15	13	10	13	12	9
			Exposed	35	34	27	34	30	24	30	27	21	27	24	19	25	22	17	22	20	16	20	18	14	17	15	12	15	13	10	13	11	9	11	10	8	10	9	7	9	8	6
	C	0-7	Interior	34	32	22	34	28	20	34	25	18	32	23	16	29	20	14	26	19	13	24	17	12	20	14	10	17	12	8	14	10	7	13	9	6	11	8	5	10	7	5
			Exposed	28	20	14	25	18	13	23	16	11	20	15	10	18	13	9	17	12	8	15	11	8	13	9	6	11	8	5	9	7	7	8	6	6	7	5	5	6	7	5
		7-20	Interior	34	27	19	33	24	17	29	21	15	26	19	14	24	17	13	22	16	11	20	14	10	16	12	9	14	10	7	12	9	6	10	8	6	9	7	5	8	6	7
			Exposed	24	17	12	21	15	11	19	14	10	17	12	9	15	11	8	14	10	7	13	9	7	11	8	6	9	7	5	8	6	6	7	5	5	6	7	5	5	6	4
		20-27	Interior	35	29	24	35	26	21	35	23	19	35	21	17	33	19	15	29	17	14	27	15	13	22	13	11	19	11	9	16	9	8	14	8	7	13	7	6	11	6	5
			Exposed	32	18	15	29	16	13	26	15	12	23	13	11	21	12	10	19	11	9	17	10	8	14	8	7	12	7	6	11	6	5	9	5	7	8	7	6	7	6	5
		27-45	Interior	35	35	28	35	32	25	32	29	22	29	26	20	26	23	18	24	21	17	22	19	15	18	16	13	16	14	11	13	12	9	12	10	8	10	9	7	9	8	6
			Exposed	26	23	18	23	21	16	21	18	15	19	17	13	17	15	12	15	14	11	14	12	10	12	11	8	10	9	7	9	8	6	8	7	5	7	6	7	6	5	6
	D	0-7	Interior	34	26	18	33	23	16	29	21	14	26	19	13	24	17	12	21	15	11	19	14	10	16	12	8	14	10	7	12	9	6	10	7	5	9	7	7	8	6	6
			Exposed	23	17	12	21	15	10	19	13	9	17	12	8	15	11	8	14	10	7	12	9	6	10	8	5	9	6	7	8	5	6	7	5	5	6	6	4	5	6	4
		7-20	Interior	31	22	16	27	19	14	24	17	13	22	16	11	20	14	10	18	13	9	16	12	9	14	10	7	12	8	6	10	7	5	9	6	7	8	5	6	7	5	5
			Exposed	20	14	10	17	13	9	16	11	8	14	10	7	13	9	7	11	8	6	10	8	5	9	6	7	7	5	6	6	7	5	6	6	5	5	5	4	7	5	3
		20-27	Interior	35	24	19	35	21	17	33	19	15	30	17	14	27	15	13	24	14	11	22	13	10	19	11	9	16	9	7	14	8	6	12	7	6	10	6	5	9	5	7
			Exposed	27	15	13	24	14	11	21	12	10	19	11	9	17	10	8	16	9	7	14	8	7	12	7	6	10	6	5	9	5	6	8	7	6	7	6	5	6	5	4
		27-45	Interior	33	30	23	30	26	21	27	24	19	24	21	17	22	19	15	20	18	14	18	16	13	15	13	11	13	11	9	11	10	8	10	9	7	8	8	6	7	7	5
			Exposed	21	19	15	19	17	13	17	15	12	15	14	11	14	12	10	13	11	9	12	10	8	10	9	7	8	7	6	7	6	5	6	6	7	5	5	6	5	7	5
10	B	0-7	Interior	28	28	28	28	28	28	28	28	26	28	28	23	28	28	21	28	27	19	28	25	17	28	21	15	25	18	12	21	15	11	18	13	9	16	12	8	14	10	7
			Exposed	28	28	21	28	27	19	28	24	17	28	21	15	27	19	13	24	17	12	22	16	11	19	13	9	16	11	8	14	10	7	12	9	6	10	7	5	9	7	7
		7-20	Interior	28	28	28	28	28	25	28	28	23	28	28	20	28	25	18	28	23	17	28	21	15	24	17	13	21	15	11	18	13	9	15	11	8	13	10	7	12	9	6
			Exposed	28	25	18	28	22	16	28	20	15	25	18	13	22	16	12	20	15	11	19	13	10	16	11	8	13	10	7	11	8	6	10	7	5	9	6	7	8	6	6
		20-27	Interior	32	32	32	32	32	31	32	32	28	32	30	25	32	27	22	32	25	20	32	23	18	32	19	16	28	16	13	24	14	11	21	12	10	18	11	9	16	9	8
			Exposed	32	27	22	32	24	20	32	22	18	32	19	16	31	17	14	28	16	13	25	14	12	21	12	10	18	10	9	16	9	7	14	8	6	12	7	6	10	6	5
		27-45	Interior	34	34	34	34	34	34	34	34	33	34	34	30	34	34	27	34	31	24	32	28	22	27	24	19	23	20	16	20	17	14	17	15	12	15	13	10	13	12	9
			Exposed	34	34	27	34	30	24	30	27	21	27	24	19	25	22	17	22	20	16	20	18	14	17	15	12	15	13	10	13	11	9	11	10	8	10	9	7	9	8	6
	C	0-7	Interior	28	28	22	28	28	20	28	25	18	28	23	16	28	20	14	26	19	13	24	17	12	20	14	10	17	12	8	14	10	7	13	9	6	11	8	5	10	7	5
			Exposed	28	20	14	25	18	13	23	16	11	20	15	10	18	13	9	17	12	8	15	11	8	13	9	6	11	8	5	9	7	7	8	6	6	7	5	5	6	7	5
		7-20	Interior	28	27	19	28	24	17	28	21	15	26	19	14	24	17	13	22	16	11	20	14	10	16	12	9	14	10	7	12	9	6	10	8	6	9	7	5	8	6	7
			Exposed	24	17	12	21	15	11	19	14	10	17	12	9	15	11	8	14	10	7	13	9	7	11	8	6	9	7	5	8	6	6	7	5	5	6	7	5	5	6	4
		20-27	Interior	32	29	24	32	26	21	32	23	19	32	21	17	32	19	15	29	17	14	27	15	13	22	13	11	19	11	9	16	9	8	14	8	7	13	7	6	11	6	5
			Exposed	32	18	15	29	16	13	26	15	12	23	13	11	21	12	10	19	11	9	17	10	8	14	8	7	12	7	6	11	6	5	9	5	7	8	7	6	7	6	5
		27-45	Interior	34	34	28	34	32	25	32	29	22	29	26	20	26	23	18	24	21	17	22	19	15	18	16	13	16	14	11	13	12	9	12	10	8	10	9	7	9	8	6
			Exposed	26	23	18	23	21	16	21	18	15	19	17	13	17	15	12	15	14	11	14	12	10	12	11	8	10	9	7	9	8	6	8	7	5	7	6	7	6	5	6
	D	0-7	Interior	28	26	18	28	23	16	28	21	14	26	19	13	24	17	12	21	15	11	19	14	10	16	12	8	14	10	7	12	9	6	10	7	5	9	7	7	8	6	6
			Exposed	23	17	12	21	15	10	19	13	9	17	12	8	15	11	8	14	10	7	12	9	6	10	8	5	9	6	7	8	5	6	7	5	5	6	6	4	5	6	4
		7-20	Interior	28	22	16	27	19	14	24	17	13	22	16	11	20	14	10	18	13	9	16	12	9	14	10	7	12	8	6	10	7	5	9	6	7	8	5	6	7	5	5
			Exposed	20	14	10	17	13	9	16	11	8	14	10	7	13	9	7	11	8	6	10	8	5	9	6	7	7	5	6	6	7	5	6	6	5	5	5	4	7	5	3
		20-27	Interior	33	24	19	33	21	17	33	19	15	30	17	14	27	15	13	24	14	11	22	13	10	19	11	9	16	9	7	14	8	6	12	7	6	10	6	5	9	5	7
			Exposed	27	15	13	24	14	11	21	12	10	19	11	9	17	10	8	16	9	7	14	8	7	12	7	6	10	6	5	9	5	6	8	7	6	7	6	5	6	5	4
		27-45	Interior	33	30	23	30	26	21	27	24	19	24	21	17	22	19	15	20	18	14	18	16	13	15	13	11	13	11	9	11	10	8	10	9	7	8	8	6	7	7	5
			Exposed	21	19	15	19	17	13	17	15	12	15	14	11	14	12	10	13	11	9	12	10	8	10	9	7	8	7	6	7	6	5	6	6	7	5	5	6	5	7	5
20	B	0-7	Interior	20	20	20	20	20	20	20	20	20	20	20	20	20	20	20	20	20	19	20	20	17	20	20	15	20	18	12	20	15	11	18	13	9	16	12	8	14	10	7
			Exposed	20	20	20	20	20	19	20	20	17	20	20	15	20	19	13	20	17	12	20	16	11	19	13	9	16	11	8	14	10	7	12	9	6	10	7	5	9	7	7
		7-20	Interior	21	21	21	21	21	21	21	21	21	21	21	20	21	21	18	21	21	17	21	21	15	21	17	13	21	15	11	18	13	9	15	11	8	13	10	7	12	9	6
			Exposed	21	21	18	21	21	16	21	20	15	21	18	13	21	16	12	20	15	11	19	13	10	16	11	8	13	10	7	11	8	6	10	7	5	9	6	7	8	6	6
		20-27	Interior	25	25	25	25	25	25	25	25	25	25	25	25	25	25	22	25	25	20	25	23	18	25	19	16	25	16	13	24	14	11	21	12	10	18	11	9	16	9	8
			Exposed	25	25	22	25	24	20	25	22	18	25	19	16	25	17	14	25	16	13	25	14	12	21	12	10	18	10	9	16	9	7	14	8	6	12	7	6	10	6	5
		27-45	Interior	28	28	28	28	28	28	28	28	28	28	28	28	28	28	27	28	28	24	28	28	22	27	24	19	23	20	16	20	17	14	17	15	12	15	13	10	13	12	9
			Exposed	28	28	27	28	28	24	28	27	21	27	24	19	25	22	17	22	20	16	20	18	14	17	15	12	15	13	10	13	11	9	11	10	8	10	9	7	9	8	6
	C	0-7	Interior	20	20	20	20	20	20	20	20	18	20	20	16	20	20	14	20	19	13	20	17	12	20	14	10	17	12	8	14	10	7	13	9	6	11	8	5	10	7	5
			Exposed	20	20	14	20	18	13	20	16	11	20	15	10	18	13	9	17	12	8	15	11	8	13	9	6	11	8	5	9	7	7	8	6	6	7	5	5	6	7	5
		7-20	Interior	21	21	19	21	21	17	21	21	15	21	19	14	21	17	13	21	16	11	20	14	10	16	12	9	14	10	7	12	9	6	10	8	6	9	7	5	8	6	7
			Exposed	21	17	12	21	15	11	19	14	10	17	12	9	15	11	8	14	10	7	13	9	7	11	8	6	9	7	5	8	6	6	7	5	5	6	7	5	5	6	4
		20-27	Interior	25	25	24	25	25	21	25	23	19	25	21	17	25	19	15	25	17	14	25	15	13	22	13	11	19	11	9	16	9	8	14	8	7	13	7	6	11	6	5
			Exposed	25	18	15	25	16	13	25	15	12	23	13	11	21	12	10	19	11	9	17	10	8	14	8	7	12	7	6	11	6	5	9	5	7	8	7	6	7	6	5
		27-45	Interior	28	28	28	28	28	25	28	28	22	28	26	20	26	23	18	24	21	17	22	19	15	18	16	13	16	14	11	13	12	9	12	10	8	10	9	7	9	8	6
			Exposed	26	23	18	23	21	16	21	18	15	19	17	13	17	15	12	15	14	11	14	12	10	12	11	8	10	9	7	9	8	6	8	7	5	7	6	7	6	5	6
	D	0-7	Interior	20	20	18	20	20	16	20	20	14	20	19	13	20	17	12	20	15	11	19	14	10	16	12	8	14	10	7	12	9	6	10	7	5	9	7	7	8	6	6
			Exposed	20	17	12	20	15	10	19	13	9	17	12	8	15	11	8	14	10	7	12	9	6	10	8	5	9	6	7	8	5	6	7	5	5	6	6	4	5	6	4
		7-20	Interior	21	21	16	21	19	14	21	17	13	21	16	11	20	14	10	18	13	9	16	12	9	14	10	7	12	8	6	10	7	5	9	6	7	8	5	6	7	5	5
			Exposed	20	14	10	17	13	9	16	11	8	14	10	7	13	9	7	11	8	6	10	8	5	9	6	7	7	5	6	6	7	5	6	6	5	5	5	4	7	5	3
		20-27	Interior	26	24	19	26	21	17	26	19	15	26	17	14	26	15	13	24	14	11	22	13	10	19	11	9	16	9	7	14	8	6	12	7	6	10	6	5	9	5	7
			Exposed	26	15	13	24	14	11	21	12	10	19	11	9	17	10	8	16	9	7	14	8	7	12	7	6	10	6	5	9	5	6	8	7	6	7	6	5	6	5	4
		27-45	Interior	29	29	23	29	26	21	27	24	19	24	21	17	22	19	15	20	18	14	18	16	13	15	13	11	13	11	9	11	10	8	10	9	7	8	8	6	7	7	5
			Exposed	21	19	15	19	17	13	17	15	12	15	14	11	14	12	10	13	11	9	12	10	8	10	9	7	8	7	6	7	6	5	6	6	7	5	5	6	5	7	5

* Cells with an astrisks indicates that the L-foot must be oriented in the Y- direction as indicated in the image.

10 Highlighted cell indicate 3-rail system span. Contact Unirac Engineering Services for support.

~~10~~ Highlighted cell with strikethrough indicate 3-rail system span and module clamp allowable capacity exceeds with 3-rails. 4-Rail system required. Contact Unirac Engineering Services for support.

UNIRAC

ASCE 7-22	II	30 ft	Ss = 1.25	19 sq.ft	PORTRAIT	CROSS-SLOPE	NXT	NXT COMBO	Stronghold BUTYL OSB
Design Standard	Risk Category	Roof Height	Seismic	Module Area	Orientation	Rail Direction	Rail Type	Clamp	Attachment

SPAN TABLES

Maximum Allowable Rail Spans for Rooftop Solar Panels Parallel to the Roof Surface (inches)

Ground Snow Load (psf)	Wind Exposure Category	Roof Tilt Angle (deg)	Panel Exposure	Basic Wind Speed (mph)																																						
				90			95			100			105			110			115			120			130			140			150			160			170			180		
				Roof Wind Zone																																						
				1	2	3	1	2	3	1	2	3	1	2	3	1	2	3	1	2	3	1	2	3	1	2	3	1	2	3	1	2	3	1	2	3	1	2	3	1	2	3
30	B	0-7	Interior	16	16	16	16	16	16	16	16	16	16	16	16	16	16	16	16	16	16	16	16	16	16	16	15	16	16	12	16	15	11	16	13	9	16	12	8	14	10	7
			Exposed	16	16	16	16	16	16	16	16	16	16	16	15	16	16	13	16	16	12	16	16	11	16	13	9	16	11	8	14	10	7	12	9	6	10	7	5	9	7	7
		7-20	Interior	16	16	16	16	16	16	16	16	16	16	16	16	16	16	16	16	16	16	16	16	15	16	16	13	16	15	11	16	13	9	15	11	8	13	10	7	12	9	6
			Exposed	16	16	16	16	16	16	16	16	15	16	16	13	16	16	12	16	15	11	16	13	10	16	11	8	13	10	7	11	8	6	10	7	5	9	6	7	8	6	6
		20-27	Interior	21	21	21	21	21	21	21	21	21	21	21	21	21	21	21	21	21	20	21	21	18	21	19	16	21	16	13	21	14	11	21	12	10	18	11	9	16	9	8
			Exposed	21	21	21	21	21	20	21	21	18	21	19	16	21	17	14	21	16	13	21	14	12	21	12	10	18	10	9	16	9	7	14	8	6	12	7	6	10	6	5
		27-45	Interior	23	23	23	23	23	23	23	23	23	23	23	23	23	23	23	23	23	23	23	23	22	23	23	19	22	20	16	20	17	14	17	15	12	15	13	10	13	12	9
			Exposed	23	23	23	23	23	23	23	23	21	23	23	19	23	22	17	22	20	16	20	18	14	17	15	12	15	13	10	13	11	9	11	10	8	10	9	7	9	8	6
	C	0-7	Interior	16	16	16	16	16	16	16	16	16	16	16	16	16	16	14	16	16	13	16	16	12	16	14	10	16	12	8	14	10	7	13	9	6	11	8	5	10	7	5
			Exposed	16	16	14	16	16	13	16	16	11	16	15	10	16	13	9	16	12	8	15	11	8	13	9	6	11	8	5	9	7	7	8	6	6	7	5	5	6	7	5
		7-20	Interior	16	16	16	16	16	16	16	16	15	16	16	14	16	16	13	16	16	11	16	14	10	16	12	9	14	10	7	12	9	6	10	8	6	9	7	5	8	6	7
			Exposed	16	16	12	16	15	11	16	14	10	16	12	9	15	11	8	14	10	7	13	9	7	11	8	6	9	7	5	8	6	6	7	5	5	6	7	5	5	6	4
		20-27	Interior	21	21	21	21	21	21	21	21	19	21	21	17	21	19	15	21	17	14	21	15	13	21	13	11	19	11	9	16	9	8	14	8	7	13	7	6	11	6	5
			Exposed	21	18	15	21	16	13	21	15	12	21	13	11	21	12	10	19	11	9	17	10	8	14	8	7	12	7	6	11	6	5	9	5	7	8	7	6	7	6	5
		27-45	Interior	23	23	23	23	23	23	23	23	22	23	23	20	23	23	18	23	21	17	22	19	15	18	16	13	16	14	11	13	12	9	12	10	8	10	9	7	9	8	6
			Exposed	23	23	18	23	21	16	21	18	15	19	17	13	17	15	12	15	14	11	14	12	10	12	11	8	10	9	7	9	8	6	8	7	5	7	6	7	6	5	6
	D	0-7	Interior	16	16	16	16	16	16	16	16	14	16	16	13	16	16	12	16	15	11	16	14	10	16	12	8	14	10	7	12	9	6	10	7	5	9	7	7	8	6	6
			Exposed	16	16	12	16	15	10	16	13	9	16	12	8	15	11	8	14	10	7	12	9	6	10	8	5	9	6	7	8	5	6	7	5	5	6	6	4	5	6	4
		7-20	Interior	16	16	16	16	16	14	16	16	13	16	16	11	16	14	10	16	13	9	16	12	9	14	10	7	12	8	6	10	7	5	9	6	7	8	5	6	7	5	5
			Exposed	16	14	10	16	13	9	16	11	8	14	10	7	13	9	7	11	8	6	10	8	5	9	6	7	7	5	6	6	7	5	6	6	5	5	5	4	7	5	3
		20-27	Interior	22	22	19	22	21	17	22	19	15	22	17	14	22	15	13	22	14	11	22	13	10	19	11	9	16	9	7	14	8	6	12	7	6	10	6	5	9	5	7
			Exposed	22	15	13	22	14	11	21	12	10	19	11	9	17	10	8	16	9	7	14	8	7	12	7	6	10	6	5	9	5	6	8	7	6	7	6	5	6	5	4
		27-45	Interior	25	25	23	25	25	21	25	24	19	24	21	17	22	19	15	20	18	14	18	16	13	15	13	11	13	11	9	11	10	8	10	9	7	8	8	6	7	7	5
			Exposed	21	19	15	19	17	13	17	15	12	15	14	11	14	12	10	13	11	9	12	10	8	10	9	7	8	7	6	7	6	5	6	6	7	5	5	6	5	7	5
40	B	0-7	Interior	15	15	15	15	15	15	15	15	15	15	15	15	15	15	15	15	15	15	15	15	15	15	15	12	15	15	11	15	13	9	15	12	8	14	10	7
			Exposed	15	15	15	15	15	15	15	15	15	15	15	15	15	15	13	15	15	12	15	15	11	15	13	9	15	11	8	14	10	7	12	9	6	10	7	5	9	7	7
		7-20	Interior	15	15	15	15	15	15	15	15	15	15	15	15	15	15	15	15	15	15	15	15	15	15	15	13	15	15	11	15	13	9	15	11	8	13	10	7	12	9	6
			Exposed	15	15	15	15	15	15	15	15	15	15	15	13	15	15	12	15	15	11	15	13	10	15	11	8	13	10	7	11	8	6	10	7	5	9	6	7	8	6	6
		20-27	Interior	17	17	17	17	17	17	17	17	17	17	17	17	17	17	17	17	17	17	17	17	17	17	17	16	17	16	13	17	14	11	17	12	10	17	11	9	16	9	8
			Exposed	17	17	17	17	17	17	17	17	17	17	17	16	17	17	14	17	16	13	17	14	12	17	12	10	17	10	9	16	9	7	14	8	6	12	7	6	10	6	5
		27-45	Interior	20	20	20	20	20	20	20	20	20	20	20	20	20	20	20	20	20	20	20	20	20	20	20	19	20	20	16	18	17	14	17	15	12	15	13	10	13	12	9
			Exposed	20	20	20	20	20	20	20	20	20	20	20	19	20	20	17	20	20	16	20	18	14	17	15	12	15	13	10	13	11	9	11	10	8	10	9	7	9	8	6
	C	0-7	Interior	15	15	15	15	15	15	15	15	15	15	15	15	15	15	14	15	15	13	15	15	12	15	14	10	15	12	8	14	10	7	13	9	6	11	8	5	10	7	5
			Exposed	15	15	14	15	15	13	15	15	11	15	15	10	15	13	9	15	12	8	15	11	8	13	9	6	11	8	5	9	7	7	8	6	6	7	5	5	6	7	5
		7-20	Interior	15	15	15	15	15	15	15	15	15	15	15	14	15	15	13	15	15	11	15	14	10	15	12	9	14	10	7	12	9	6	10	8	6	9	7	5	8	6	7
			Exposed	15	15	12	15	15	11	15	14	10	15	12	9	15	11	8	14	10	7	13	9	7	11	8	6	9	7	5	8	6	6	7	5	5	6	7	5	5	6	4
		20-27	Interior	17	17	17	17	17	17	17	17	17	17	17	17	17	17	15	17	17	14	17	15	13	17	13	11	17	11	9	16	9	8	14	8	7	13	7	6	11	6	5
			Exposed	17	17	15	17	16	13	17	15	12	17	13	11	17	12	10	17	11	9	17	10	8	14	8	7	12	7	6	11	6	5	9	5	7	8	7	6	7	6	5
		27-45	Interior	20	20	20	20	20	20	20	20	20	20	20	20	20	20	18	20	20	17	19	19	15	18	16	13	16	14	11	13	12	9	12	10	8	10	9	7	9	8	6
			Exposed	20	20	18	20	20	16	20	18	15	19	17	13	17	15	12	15	14	11	14	12	10	12	11	8	10	9	7	9	8	6	8	7	5	7	6	7	6	5	6
	D	0-7	Interior	16	16	16	16	16	16	16	16	14	16	16	13	16	16	12	16	15	11	16	14	10	16	12	8	14	10	7	12	9	6	10	7	5	9	7	7	8	6	6
			Exposed	16	16	12	16	15	10	16	13	9	16	12	8	15	11	8	14	10	7	12	9	6	10	8	5	9	6	7	8	5	6	7	5	5	6	6	4	5	6	4
		7-20	Interior	16	16	16	16	16	14	16	16	13	16	16	11	16	14	10	16	13	9	16	12	9	14	10	7	12	8	6	10	7	5	9	6	7	8	5	6	7	5	5
			Exposed	16	14	10	16	13	9	16	11	8	14	10	7	13	9	7	11	8	6	10	8	5	9	6	7	7	5	6	6	7	5	6	6	5	5	5	4	7	5	3
		20-27	Interior	19	19	19	19	19	17	19	19	15	19	17	14	19	15	13	19	14	11	19	13	10	18	11	9	16	9	7	14	8	6	12	7	6	10	6	5	9	5	7
			Exposed	19	15	13	19	14	11	19	12	10	19	11	9	17	10	8	16	9	7	14	8	7	12	7	6	10	6	5	9	5	6	8	7	6	7	6	5	6	5	4
		27-45	Interior	21	21	21	21	21	21	21	21	19	21	21	17	20	19	15	19	18	14	18	16	13	15	13	11	13	11	9	11	10	8	10	9	7	8	8	6	7	7	5
			Exposed	21	19	15	19	17	13	17	15	12	15	14	11	14	12	10	13	11	9	12	10	8	10	9	7	8	7	6	7	6	5	6	6	7	5	5	6	5	7	5
50	B	0-7	Interior	13	13	13	13	13	13	13	13	13	13	13	13	13	13	13	13	13	13	13	13	13	13	13	12	13	13	11	13	13	9	13	13	9	13	12	8	13	10	7
			Exposed	13	13	13	13	13	13	13	13	13	13	13	13	13	13	13	13	13	12	13	13	11	13	13	9	13	11	8	13	10	7	12	9	6	10	7	5	9	7	7
		7-20	Interior	13	13	13	13	13	13	13	13	13	13	13	13	13	13	13	13	13	13	13	13	13	13	13	13	13	13	11	13	13	9	13	11	8	13	10	7	12	9	6
			Exposed	13	13	13	13	13	13	13	13	13	13	13	13	13	13	12	13	13	11	13	13	10	13	11	8	13	10	7	11	8	6	10	7	5	9	6	7	8	6	6
		20-27	Interior	15	15	15	15	15	15	15	15	15	15	15	15	15	15	15	15	15	15	15	15	15	15	15	15	15	15	13	15	14	11	15	12	10	15	11	9	14	9	8
			Exposed	15	15	15	15	15	15	15	15	15	15	15	15	15	15	14	15	15	13	15	14	12	15	12	10	15	10	9	15	9	7	14	8	6	12	7	6	10	6	5
		27-45	Interior	18	18	18	18	18	18	18	18	18	18	18	18	18	18	18	18	18	18	18	18	18	18	18	18	17	17	16	16	16	14	16	15	12	15	13	10	13	12	9
			Exposed	18	18	18	18	18	18	18	18	18	18	18	18	18	18	17	18	18	16	18	18	14	17	15	12	15	13	10	13	11	9	11	10	8	10	9	7	9	8	6
	C	0-7	Interior	13	13	13	13	13	13	13	13	13	13	13	13	13	13	13	13	13	13	13	13	12	13	13	10	13	12	8	13	10	7	13	9	6	11	8	5	10	7	5
			Exposed	13	13	13	13	13	13	13	13	11	13	13	10	13	13	9	13	12	8	13	11	8	13	9	6	11	8	5	9	7	7	8	6	6	7	5	5	6	7	5
		7-20	Interior	13	13	13	13	13	13	13	13	13	13	13	13	13	13	13	13	13	11	13	13	10	13	12	9	13	10	7	12	9	6	10	8	6	9	7	5	8	6	7
			Exposed	13	13	12	13	13	11	13	13	10	13	12	9	13	11	8	13	10	7	13	9	7	11	8	6	9	7	5	8	6	6	7	5	5	6	7	5	5	6	4
		20-27	Interior	15	15	15	15	15	15	15	15	15	15	15	15	15	15	15	15	15	14	15	15	13	15	13	11	15	11	9	14	9	8	14	8	7	13	7	6	11	6	5
			Exposed	15	15	15	15	15	13	15	15	12	15	13	11	15	12	10	15	11	9	15	10	8	14	8	7	12	7	6	11	6	5	9	5	7	8	7	6	7	6	5
		27-45	Interior	18	18	18	18	18	18	18	18	18	18	18	18	18	18	17	17	17	17	17	17	15	16	16	13	15	14	11	13	12	9	12	10	8	10	9	7	9	8	6
			Exposed	18	18	18	18	18	16	18	18	15	18	17	13	17	15	12	15	14	11	14	12	10	12	11	8	10	9	7	9	8	6	8	7	5	7	6	7	6	5	6
	D	0-7	Interior	14	14	14	14	14	14	14	14	14	14	14	14	14	14	12	14	14	11	14	14	10	14	12	8	14	10	7	12	9	6	10	7	5	9	7	7	8	6	6
			Exposed	14	14	12	14	14	10	14	13	9	14	12	8	14	11	8	14	10	7	12	9	6	10	8	5	9	6	7	8	5	6	7	5	5	6	6	4	5	6	4
		7-20	Interior	14	14	14	14	14	14	14	14	13	14	14	11	14	14	10	14	13	9	14	12	9	14	10	7	12	8	6	10	7	5	9	6	7	8	5	6	7	5	5
			Exposed	14	14	10	14	13	9	14	11	8	14	10	7	13	9	7	11	8	6	10	8	5	9	6	7	7	5	6	6	7	5	6	6	5	5	5	4	7	5	3
		20-27	Interior	16	16	16	16	16	16	16	16	15	16	16	14	16	15	13	16	14	11	16	13	10	16	11	9	15	9	7	14	8	6	12	7	6	10	6	5	9	5	7
			Exposed	16	15	13	16	14	11	16	12	10	16	11	9	16	10	8	16	9	7	14	8	7	12	7	6	10	6	5	9	5	6	8	7	6	7	6	5	6	5	4
		27-45	Interior	19	19	19	19	19	19	19	19	19	19	19	17	18	18	15	17	17	14	17	16	13	15	13	11	13	11	9	11	10	8	10	9	7	8	8	6	7	7	5
			Exposed	19	19	15	19	17	13	17	15	12	15	14	11	14	12	10	13	11	9	12	10	8	10	9	7	8	7	6	7	6	5	6	6	7	5	5	6	5	7	5

* Cells with an astrisks indicates that the L-foot must be oriented in the Y- direction as indicated in the image.

10 Highlighted cell indicate 3-rail system span. Contact Unirac Engineering Services for support.

~~10~~ Highlighted cell with strikethrough indicate 3-rail system span and module clamp allowable capacity exceeds with 3-rails. 4-Rail system required. Contact Unirac Engineering Services for support.

UNIRAC

ASCE 7-22	II	30 ft	Ss = 1.25	19 sq.ft	PORTRAIT	CROSS-SLOPE	NXT	NXT COMBO	Stronghold BUTYL OSB
Design Standard	Risk Category	Roof Height	Seismic	Module Area	Orientation	Rail Direction	Rail Type	Clamp	Attachment

SPAN TABLES

Maximum Allowable Rail Spans for Rooftop Solar Panels Parallel to the Roof Surface (inches)

Ground Snow Load (psf)	Wind Exposure Category	Roof Tilt Angle (deg)	Panel Exposure	Basic Wind Speed (mph)																																								
				90			95			100			105			110			115			120			130			140			150			160			170			180		
				Roof Wind Zone																																								
				1	2	3	1	2	3	1	2	3	1	2	3	1	2	3	1	2	3	1	2	3	1	2	3	1	2	3	1	2	3	1	2	3	1	2	3	1	2	3
60	B	0-7	Interior	11	11	11	11	11	11	11	11	11	11	11	11	11	11	11	11	11	11	11	11	11	11	11	11	11	11	11	11	11	11	11	11	9	11	11	8	11	10	7
			Exposed	11	11	11	11	11	11	11	11	11	11	11	11	11	11	11	11	11	11	11	11	11	11	11	9	11	11	8	11	10	7	11	9	6	10	7	5	9	7	7
		7-20	Interior	11	11	11	11	11	11	11	11	11	11	11	11	11	11	11	11	11	11	11	11	11	11	11	11	11	11	11	11	11	9	11	11	8	11	10	7	11	9	6
			Exposed	11	11	11	11	11	11	11	11	11	11	11	11	11	11	11	11	11	11	11	11	10	11	11	8	11	10	7	11	8	6	10	7	5	9	6	7	8	6	6
		20-27	Interior	13	13	13	13	13	13	13	13	13	13	13	13	13	13	13	13	13	13	13	13	13	13	13	13	13	13	13	13	13	11	13	12	10	13	11	9	13	9	8
			Exposed	13	13	13	13	13	13	13	13	13	13	13	13	13	13	13	13	13	13	13	13	12	13	12	10	13	10	9	13	9	7	13	8	6	12	7	6	10	6	5
		27-45	Interior	16	16	16	16	16	16	16	16	16	16	16	16	16	16	16	16	16	16	16	16	16	16	16	16	15	15	15	15	15	14	14	14	12	13	13	10	13	12	9
			Exposed	16	16	16	16	16	16	16	16	16	16	16	16	16	16	16	16	16	16	16	16	14	16	15	12	15	13	10	13	11	9	11	10	8	10	9	7	9	8	6
	C	0-7	Interior	11	11	11	11	11	11	11	11	11	11	11	11	11	11	11	11	11	11	11	11	11	11	11	10	11	11	8	11	10	7	11	9	6	11	8	5	10	7	5
			Exposed	11	11	11	11	11	11	11	11	11	11	11	10	11	11	9	11	11	8	11	11	8	11	9	6	11	8	5	9	7	7	8	6	6	7	5	5	6	7	5
		7-20	Interior	11	11	11	11	11	11	11	11	11	11	11	11	11	11	11	11	11	11	11	11	10	11	11	9	11	10	7	11	9	6	10	8	6	9	7	5	8	6	7
			Exposed	11	11	11	11	11	11	11	11	10	11	11	9	11	11	8	11	10	7	11	9	7	11	8	6	9	7	5	8	6	6	7	5	5	6	7	5	5	6	4
		20-27	Interior	13	13	13	13	13	13	13	13	13	13	13	13	13	13	13	13	13	13	13	13	13	13	13	11	13	11	9	13	9	8	12	8	7	12	7	6	11	6	5
			Exposed	13	13	13	13	13	13	13	13	12	13	13	11	13	12	10	13	11	9	13	10	8	13	8	7	12	7	6	11	6	5	9	5	7	8	7	6	7	6	5
		27-45	Interior	16	16	16	16	16	16	16	16	16	16	16	16	16	16	16	16	16	16	15	15	15	14	14	13	14	14	11	13	12	9	12	10	8	10	9	7	9	8	6
			Exposed	16	16	16	16	16	16	16	16	15	16	16	13	16	15	12	15	14	11	14	12	10	12	11	8	10	9	7	9	8	6	8	7	5	7	6	7	6	5	6
	D	0-7	Interior	12	12	12	12	12	12	12	12	12	12	12	12	12	12	12	12	12	11	12	12	10	12	12	8	12	10	7	12	9	6	10	7	5	9	7	7	8	6	6
			Exposed	12	12	12	12	12	10	12	12	9	12	12	8	12	11	8	12	10	7	12	9	6	10	8	5	9	6	7	8	5	6	7	5	5	6	6	4	5	6	4
		7-20	Interior	12	12	12	12	12	12	12	12	12	12	12	11	12	12	10	12	12	9	12	12	9	12	10	7	12	8	6	10	7	5	9	6	7	8	5	6	7	5	5
			Exposed	12	12	10	12	12	9	12	11	8	12	10	7	12	9	7	11	8	6	10	8	5	9	6	7	7	5	6	6	7	5	6	6	5	5	5	4	7	5	3
		20-27	Interior	14	14	14	14	14	14	14	14	14	14	14	14	14	14	13	14	14	11	14	13	10	14	11	9	14	9	7	13	8	6	12	7	6	10	6	5	9	5	7
			Exposed	14	14	13	14	14	11	14	12	10	14	11	9	14	10	8	14	9	7	14	8	7	12	7	6	10	6	5	9	5	6	8	7	6	7	6	5	6	5	4
		27-45	Interior	17	17	17	17	17	17	17	17	17	17	17	17	16	16	15	16	16	14	15	15	13	14	13	11	13	11	9	11	10	8	10	9	7	8	8	6	7	7	5
			Exposed	17	17	15	17	17	13	17	15	12	15	14	11	14	12	10	13	11	9	12	10	8	10	9	7	8	7	6	7	6	5	6	6	7	5	5	6	5	7	5
70	B	0-7	Interior	9	9	9	9	9	9	9	9	9	9	9	9	9	9	9	9	9	9	9	9	9	9	9	9	9	9	9	9	9	9	9	9	9	9	9	8	9	9	7
			Exposed	9	9	9	9	9	9	9	9	9	9	9	9	9	9	9	9	9	9	9	9	9	9	9	9	9	9	8	9	9	7	9	9	6	9	7	5	9	7	7
		7-20	Interior	9	9	9	9	9	9	9	9	9	9	9	9	9	9	9	9	9	9	9	9	9	9	9	9	9	9	9	9	9	9	9	9	8	9	9	7	9	9	6
			Exposed	9	9	9	9	9	9	9	9	9	9	9	9	9	9	9	9	9	9	9	9	9	9	9	8	9	9	7	9	8	6	9	7	5	9	6	7	8	6	6
		20-27	Interior	12	12	12	12	12	12	12	12	12	12	12	12	12	12	12	12	12	12	12	12	12	12	12	12	12	12	12	12	12	11	12	12	10	12	11	9	11	9	8
			Exposed	12	12	12	12	12	12	12	12	12	12	12	12	12	12	12	12	12	12	12	12	12	12	12	10	12	10	9	12	9	7	12	8	6	12	7	6	10	6	5
		27-45	Interior	14	14	14	14	14	14	14	14	14	14	14	14	14	14	14	14	14	14	14	14	14	14	14	14	14	14	14	13	13	13	13	13	12	12	12	10	12	12	9
			Exposed	14	14	14	14	14	14	14	14	14	14	14	14	14	14	14	14	14	14	14	14	14	14	14	12	14	13	10	13	11	9	11	10	8	10	9	7	9	8	6
	C	0-7	Interior	9	9	9	9	9	9	9	9	9	9	9	9	9	9	9	9	9	9	9	9	9	9	9	9	9	9	8	9	9	7	9	9	6	9	8	5	9	7	5
			Exposed	9	9	9	9	9	9	9	9	9	9	9	9	9	9	9	9	9	8	9	9	8	9	9	6	9	8	5	9	7	7	8	6	6	7	5	5	6	7	5
		7-20	Interior	9	9	9	9	9	9	9	9	9	9	9	9	9	9	9	9	9	9	9	9	9	9	9	9	9	9	7	9	9	6	9	8	6	9	7	5	8	6	7
			Exposed	9	9	9	9	9	9	9	9	9	9	9	9	9	9	8	9	9	7	9	9	7	9	8	6	9	7	5	8	6	6	7	5	5	6	7	5	5	6	4
		20-27	Interior	12	12	12	12	12	12	12	12	12	12	12	12	12	12	12	12	12	12	12	12	12	12	12	11	12	11	9	11	9	8	11	8	7	11	7	6	10	6	5
			Exposed	12	12	12	12	12	12	12	12	12	12	12	11	12	12	10	12	11	9	12	10	8	12	8	7	12	7	6	11	6	5	9	5	7	8	7	6	7	6	5
		27-45	Interior	14	14	14	14	14	14	14	14	14	14	14	14	14	14	14	14	14	14	14	14	14	14	14	13	13	13	13	12	12	11	12	11	9	11	10	8	10	9	7
			Exposed	14	14	14	14	14	14	14	14	14	14	14	14	14	14	14	14	14	14	14	14	14	14	14	12	14	13	10	13	11	9	11	10	8	10	9	7	9	8	6
	D	0-7	Interior	10	10	10	10	10	10	10	10	10	10	10	10	10	10	10	10	10	10	10	10	10	10	10	8	10	10	7	10	9	6	10	7	5	9	7	7	8	6	6
			Exposed	10	10	10	10	10	10	10	10	9	10	10	8	10	10	8	10	10	7	10	9	6	10	8	5	9	6	7	8	5	6	7	5	5	6	6	4	5	6	4
		7-20	Interior	10	10	10	10	10	10	10	10	10	10	10	10	10	10	10	10	10	9	10	10	9	10	10	7	10	8	6	10	7	5	9	6	7	8	5	6	7	5	5
			Exposed	10	10	10	10	10	9	10	10	8	10	10	7	10	9	7	10	8	6	10	8	5	9	6	7	7	5	6	6	7	5	6	6	5	5	5	4	7	5	3
		20-27	Interior	13	13	13	13	13	13	13	13	13	13	13	13	13	13	13	13	13	11	13	13	10	13	11	9	12	9	7	12	8	6	11	7	6	10	6	5	9	5	7
			Exposed	13	13	13	13	13	11	13	12	10	13	11	9	13	10	8	13	9	7	13	8	7	12	7	6	10	6	5	9	5	6	8	7	6	7	6	5	6	5	4
		27-45	Interior	15	15	15	15	15	15	15	15	15	15	15	15	15	15	15	14	14	14	14	14	13	13	13	11	12	11	9	11	10	8	10	9	7	8	8	6	7	7	5
			Exposed	15	15	15	15	15	13	15	15	12	15	14	11	14	12	10	13	11	9	12	10	8	10	9	7	8	7	6	7	6	5	6	6	7	5	5	6	5	7	5
80	B	0-7	Interior	8	8	8	8	8	8	8	8	8	8	8	8	8	8	8	8	8	8	8	8	8	8	8	8	8	8	8	8	8	8	8	8	8	8	8	8	8	8	7
			Exposed	8	8	8	8	8	8	8	8	8	8	8	8	8	8	8	8	8	8	8	8	8	8	8	8	8	8	8	8	8	7	8	8	6	8	7	5	8	7	7
		7-20	Interior	8	8	8	8	8	8	8	8	8	8	8	8	8	8	8	8	8	8	8	8	8	8	8	8	8	8	8	8	8	8	8	8	8	8	8	7	8	8	6
			Exposed	8	8	8	8	8	8	8	8	8	8	8	8	8	8	8	8	8	8	8	8	8	8	8	8	8	8	7	8	8	6	8	7	5	8	6	7	8	6	6
		20-27	Interior	10	10	10	10	10	10	10	10	10	10	10	10	10	10	10	10	10	10	10	10	10	10	10	10	10	10	10	10	10	10	10	10	10	10	10	9	10	9	8
			Exposed	10	10	10	10	10	10	10	10	10	10	10	10	10	10	10	10	10	10	10	10	10	10	10	10	10	10	9	10	9	7	10	8	6	10	7	6	10	6	5
		27-45	Interior	13	13	13	13	13	13	13	13	13	13	13	13	13	13	13	13	13	13	13	13	13	13	13	13	13	13	13	12	12	12	12	12	12	11	11	10	11	11	9
			Exposed	13	13	13	13	13	13	13	13	13	13	13	13	13	13	13	13	13	13	13	13	13	13	13	10	12	11	9	11	10	8	10	9	7	9	7	6	9	8	6
	C	0-7	Interior	8	8	8	8	8	8	8	8	8	8	8	8	8	8	8	8	8	8	8	8	8	8	8	8	8	8	8	8	8	7	8	8	6	8	8	5	8	7	5
			Exposed	8	8	8	8	8	8	8	8	8	8	8	8	8	8	8	8	8	8	8	8	8	8	8	5	8	7	7	8	6	6	7	5	5	6	7	5	6	7	5
		7-20	Interior	8	8	8	8	8	8	8	8	8	8	8	8	8	8	8	8	8	8	8	8	8	8	8	7	8	8	6	8	8	6	8	7	5	8	7	5	8	6	7
			Exposed	8	8	8	8	8	8	8	8	8	8	8	8	8	8	8	8	8	7	8	8	7	8	8	6	8	7	5	8	6	6	7	5	5	6	7	5	5	6	4
		20-27	Interior	10	10	10	10	10	10	10	10	10	10	10	10	10	10	10	10	10	10	10	10	10	10	10	9	10	9	8	10	8	7	10	7	6	9	6	5	9	5	7
			Exposed	10	10	10	10	10	10	10	10	10	10	10	10	10	10	10	10	10	9	10	10	8	10	8	7	10	7	6	10	6	5	9	5	7	8	7	6	7	6	5
		27-45	Interior	13	13	13	13	13	13	13	13	13	13	13	13	13	13	13	13	13	13	13	13	13	12	12	12	11	11	11	11	11	9	10	10	8	10	9	7	9	8	6
			Exposed	13	13	13	13	13	13	13	13	13	13	13	13	13	13	12	13	13	11	13	12	10	12	11	8	10	9	7	9	8	6	8	7	5	7	6	7	6	5	6
	D	0-7	Interior	9	9	9	9	9	9	9	9	9	9	9	9	9	9	9	9	9	9	9	9	9	9	9	8	9	9	7	9	9	6	9	7	5	9	7	7	8	6	6
			Exposed	9	9	9	9	9	9	9	9	9	9	9	8	9	9	8	9	9	7	9	9	6	9	8	5	9	6	7	8	5	6	7	5	5	6	6	4	5	6	4
		7-20	Interior	9	9	9	9	9	9	9	9	9	9	9	9	9	9	9	9	9	9	9	9	9	9	9	7	9	8	6	9	7	5	9	6	7	8	5	6	7	5	5
			Exposed	9	9	9	9	9	9	9	9	8	9	9	7	9	8	6	9	8	5	9	6	7	7	5	6	6	5	6	6	7	5	6	6	5	5	5	4	7	5	3
		20-27	Interior	11	11	11	11	11	11	11	11	11	11	11	11	11	11	11	11	11	11	11	11	10	11	11	9	11	9	7	11	8	6	10	7	6	10	6	5	9	5	7
			Exposed	11	11	11	11	11	11	11	11	10	11	11	9	11	10	8	11	9	7	11	8	7	11	7	6	10	6	5	9	5	6	8	7	6	7	6	5	6	5	4
		27-45	Interior	14	14	14	14	14	14	14	14	14	14	14	14	13	13	13	13	13	13	13	13	13	12	12	11	11	11	9	11	10	8	10	9	7	8	8	6	7	7	5
			Exposed	14	14	14	14	14	13	14	14	12	14	14	11	13	12	10	13	11	9	12	10	8	10	9	7	8	7	6	7	6	5	6	6	7	5	5	6	5	7	5

* Cells with an astrisks indicates that the L-foot must be oriented in the Y- direction as indicated in the image.

10 Highlighted cell indicate 3-rail system span. Contact Unirac Engineering Services for support.

~~10~~ Highlighted cell with strikethrough indicate 3-rail system span and module clamp allowable capacity exceeds with 3-rails. 4-Rail system required. Contact Unirac Engineering Services for support.

UNIRAC

ASCE 7-22	II	30 ft	Ss = 1.25	19 sq.ft	PORTRAIT	CROSS-SLOPE	NXT	NXT COMBO	Stronghold BUTYL OSB
Design Standard	Risk Category	Roof Height	Seismic	Module Area	Orientation	Rail Direction	Rail Type	Clamp	Attachment

SPAN TABLES

Maximum Allowable Rail Spans for Rooftop Solar Panels Parallel to the Roof Surface (inches)

Ground Snow Load (psf)	Wind Exposure Category	Roof Tilt Angle (deg)	Panel Exposure	Basic Wind Speed (mph)																																						
				90			95			100			105			110			115			120			130			140			150			160			170			180		
				Roof Wind Zone																																						
				1	2	3	1	2	3	1	2	3	1	2	3	1	2	3	1	2	3	1	2	3	1	2	3	1	2	3	1	2	3	1	2	3	1	2	3	1	2	3
90	B	0-7	Interior	7	7	7	7	7	7	7	7	7	7	7	7	7	7	7	7	7	7	7	7	7	7	7	7	7	7	7	7	7	7	7	7	7	7	7	7	7	7	7
			Exposed	7	7	7	7	7	7	7	7	7	7	7	7	7	7	7	7	7	7	7	7	7	7	7	7	7	7	7	7	7	7	7	7	6	7	7	5	7	7	7
		7-20	Interior	7	7	7	7	7	7	7	7	7	7	7	7	7	7	7	7	7	7	7	7	7	7	7	7	7	7	7	7	7	7	7	7	7	7	7	7	7	7	6
			Exposed	7	7	7	7	7	7	7	7	7	7	7	7	7	7	7	7	7	7	7	7	7	7	7	7	7	7	7	7	7	6	7	7	5	7	6	7	7	6	6
		20-27	Interior	9	9	9	9	9	9	9	9	9	9	9	9	9	9	9	9	9	9	9	9	9	9	9	9	9	9	9	9	9	9	9	9	9	9	9	9	9	9	8
			Exposed	9	9	9	9	9	9	9	9	9	9	9	9	9	9	9	9	9	9	9	9	9	9	9	9	9	9	9	9	9	7	9	8	6	9	7	6	9	6	5
		27-45	Interior	12	12	12	12	12	12	12	12	12	12	12	12	12	12	12	12	12	12	12	12	12	12	12	12	12	12	12	11	11	11	11	11	11	10	10	10	10	10	9
			Exposed	12	12	12	12	12	12	12	12	12	12	12	12	12	12	12	12	12	12	12	12	12	12	12	12	12	12	10	11	11	9	11	10	8	10	9	7	9	8	6
	C	0-7	Interior	7	7	7	7	7	7	7	7	7	7	7	7	7	7	7	7	7	7	7	7	7	7	7	7	7	7	7	7	7	7	7	7	6	7	7	5	7	7	5
			Exposed	7	7	7	7	7	7	7	7	7	7	7	7	7	7	7	7	7	7	7	7	7	7	7	6	7	7	5	7	7	7	7	6	6	7	5	5	6	7	5
		7-20	Interior	7	7	7	7	7	7	7	7	7	7	7	7	7	7	7	7	7	7	7	7	7	7	7	7	7	7	7	7	7	6	7	7	6	7	7	5	7	6	7
			Exposed	7	7	7	7	7	7	7	7	7	7	7	7	7	7	7	7	7	7	7	7	7	7	7	6	7	7	5	7	6	6	7	5	5	6	7	5	5	6	4
		20-27	Interior	9	9	9	9	9	9	9	9	9	9	9	9	9	9	9	9	9	9	9	9	9	9	9	9	9	9	9	9	9	8	9	8	7	9	7	6	9	6	5
			Exposed	9	9	9	9	9	9	9	9	9	9	9	9	9	9	9	9	9	9	9	9	8	9	8	7	9	7	6	9	6	5	9	5	7	8	7	6	7	6	5
		27-45	Interior	12	12	12	12	12	12	12	12	12	12	12	12	12	12	12	12	12	12	12	12	12	11	11	11	11	11	11	10	10	9	10	10	8	9	9	7	9	8	6
			Exposed	12	12	12	12	12	12	12	12	12	12	12	12	12	12	12	12	12	11	12	12	10	11	11	8	10	9	7	9	8	6	8	7	5	7	6	7	6	5	6
	D	0-7	Interior	8	8	8	8	8	8	8	8	8	8	8	8	8	8	8	8	8	8	8	8	8	8	8	8	8	8	7	8	8	6	8	7	5	8	7	7	8	6	6
			Exposed	8	8	8	8	8	8	8	8	8	8	8	8	8	8	8	8	8	7	8	8	6	8	8	5	8	6	7	8	5	6	7	5	5	6	6	4	5	6	4
		7-20	Interior	8	8	8	8	8	8	8	8	8	8	8	8	8	8	8	8	8	8	8	8	8	8	8	7	8	8	6	8	7	5	8	6	7	8	5	6	7	5	5
			Exposed	8	8	8	8	8	8	8	8	8	8	8	7	8	8	7	8	8	6	8	8	5	8	6	7	7	5	6	6	7	5	6	6	5	5	5	4	7	5	3
		20-27	Interior	10	10	10	10	10	10	10	10	10	10	10	10	10	10	10	10	10	10	10	10	10	10	10	9	10	9	7	10	8	6	10	7	6	9	6	5	9	5	7
			Exposed	10	10	10	10	10	10	10	10	10	10	10	9	10	10	8	10	9	7	10	8	7	10	7	6	10	6	5	9	5	6	8	7	6	7	6	5	6	5	4
		27-45	Interior	13	13	13	13	13	13	13	13	13	13	13	13	12	12	12	12	12	12	12	12	12	11	11	11	11	11	9	10	10	8	10	9	7	8	8	6	7	7	5
			Exposed	13	13	13	13	13	13	13	13	12	13	13	11	12	12	10	12	11	9	12	10	8	10	9	7	8	7	6	7	6	5	6	6	7	5	5	6	5	7	5
100	B	0-7	Interior	6	6	6	6	6	6	6	6	6	6	6	6	6	6	6	6	6	6	6	6	6	6	6	6	6	6	6	6	6	6	6	6	6	6	6	6	6	6	6
			Exposed	6	6	6	6	6	6	6	6	6	6	6	6	6	6	6	6	6	6	6	6	6	6	6	6	6	6	6	6	6	6	6	6	6	6	6	5	6	6	7
		7-20	Interior	7	7	7	7	7	7	7	7	7	7	7	7	7	7	7	7	7	7	7	7	7	7	7	7	7	7	7	7	7	7	7	7	7	7	7	7	7	7	6
			Exposed	7	7	7	7	7	7	7	7	7	7	7	7	7	7	7	7	7	7	7	7	7	7	7	7	7	7	7	7	7	6	7	7	5	7	6	7	7	6	6
		20-27	Interior	8	8	8	8	8	8	8	8	8	8	8	8	8	8	8	8	8	8	8	8	8	8	8	8	8	8	8	8	8	8	8	8	8	8	8	8	8	8	8
			Exposed	8	8	8	8	8	8	8	8	8	8	8	8	8	8	8	8	8	8	8	8	8	8	8	8	8	8	8	8	8	7	8	8	6	8	7	6	8	6	5
		27-45	Interior	10	10	10	10	10	10	10	10	10	10	10	10	10	10	10	10	10	10	10	10	10	10	10	10	10	10	10	10	10	10	10	10	10	10	10	10	9	9	9
			Exposed	10	10	10	10	10	10	10	10	10	10	10	10	10	10	10	10	10	10	10	10	10	10	10	10	10	10	10	10	10	9	10	10	8	10	9	7	9	8	6
	C	0-7	Interior	6	6	6	6	6	6	6	6	6	6	6	6	6	6	6	6	6	6	6	6	6	6	6	6	6	6	6	6	6	6	6	6	6	6	6	5	6	6	5
			Exposed	6	6	6	6	6	6	6	6	6	6	6	6	6	6	6	6	6	6	6	6	5	6	6	7	6	6	6	6	5	5	6	7	5	6	7	5	6	7	5
		7-20	Interior	7	7	7	7	7	7	7	7	7	7	7	7	7	7	7	7	7	7	7	7	7	7	7	7	7	7	7	7	7	6	7	7	6	7	7	5	7	6	7
			Exposed	7	7	7	7	7	7	7	7	7	7	7	7	7	7	7	7	7	7	7	7	7	7	7	6	7	7	5	7	6	6	7	5	5	6	7	5	5	6	4
		20-27	Interior	8	8	8	8	8	8	8	8	8	8	8	8	8	8	8	8	8	8	8	8	8	8	8	8	8	8	8	8	8	8	8	8	7	8	7	6	8	6	5
			Exposed	8	8	8	8	8	8	8	8	8	8	8	8	8	8	8	8	8	8	8	8	8	8	8	7	8	7	6	8	6	5	8	5	7	8	7	6	7	6	5
		27-45	Interior	10	10	10	10	10	10	10	10	10	10	10	10	10	10	10	10	10	10	10	10	10	10	10	10	10	10	10	9	9	9	9	9	8	9	9	7	8	8	6
			Exposed	10	10	10	10	10	10	10	10	10	10	10	10	10	10	10	10	10	10	10	10	10	10	10	8	10	9	7	9	8	6	8	7	5	7	6	7	6	5	6
	D	0-7	Interior	7	7	7	7	7	7	7	7	7	7	7	7	7	7	7	7	7	7	7	7	7	7	7	7	7	7	7	7	7	6	7	7	5	7	7	7	7	6	6
			Exposed	7	7	7	7	7	7	7	7	7	7	7	7	7	7	7	7	7	7	7	7	6	7	7	5	7	6	7	7	5	5	6	6	4	5	6	4	5	6	4
		7-20	Interior	7	7	7	7	7	7	7	7	7	7	7	7	7	7	7	7	7	7	7	7	7	7	7	7	7	7	6	7	7	5	7	6	7	7	5	6	7	5	5
			Exposed	7	7	7	7	7	7	7	7	7	7	7	7	7	7	7	7	7	6	7	7	5	7	6	7	7	5	6	6	7	5	6	6	5	5	5	4	7	5	3
		20-27	Interior	9	9	9	9	9	9	9	9	9	9	9	9	9	9	9	9	9	9	9	9	9	9	9	9	9	9	7	9	8	6	9	7	6	9	6	5	8	5	7
			Exposed	9	9	9	9	9	9	9	9	9	9	9	9	9	9	8	9	9	7	9	8	7	9	7	6	9	6	5	9	5	6	8	7	6	7	6	5	6	5	4
		27-45	Interior	12	12	12	12	12	12	12	12	12	12	12	12	12	12	12	11	11	11	11	11	11	11	11	11	10	10	9	10	10	8	9	9	7	8	8	6	7	7	5
			Exposed	12	12	12	12	12	12	12	12	12	12	12	11	12	12	10	11	11	9	11	10	8	10	9	7	8	7	6	7	6	5	6	6	7	5	5	6	5	7	5

* Cells with an astrisks indicates that the L-foot must be oriented in the Y- direction as indicated in the image.

10 Highlighted cell indicate 3-rail system span. Contact Unirac Engineering Services for support.

~~10~~ Highlighted cell with strikethrough indicate 3-rail system span and module clamp allowable capacity exceeds with 3-rails. 4-Rail system required. Contact Unirac Engineering Services for support.

UNIRAC

ASCE 7-22	II	30 ft	Ss = 1.25	19 sq.ft	LANDSCAPE	CROSS-SLOPE	NXT	NXT COMBO	Stronghold BUTYL OSB
Design Standard	Risk Category	Roof Height	Seismic	Module Area	Orientation	Rail Direction	Rail Type	Clamp	Attachment

SPAN TABLES

Maximum Allowable Rail Spans for Rooftop Solar Panels Parallel to the Roof Surface (inches)

Ground Snow Load (psf)	Wind Exposure Category	Roof Tilt Angle (deg)	Panel Exposure	Basic Wind Speed (mph)																																						
				90			95			100			105			110			115			120			130			140			150			160			170			180		
				Roof Wind Zone																																						
				1	2	3	1	2	3	1	2	3	1	2	3	1	2	3	1	2	3	1	2	3	1	2	3	1	2	3	1	2	3	1	2	3	1	2	3	1	2	3
0	B	0-7	Interior	57	57	55	57	57	49	57	57	44	57	57	39	57	51	35	57	46	32	57	42	29	49	35	25	42	30	21	36	26	18	31	23	16	27	20	14	24	17	12
			Exposed	57	51	35	57	45	31	56	40	28	50	36	25	46	33	23	41	30	21	38	27	19	32	23	16	27	19	14	23	17	12	20	15	10	18	13	9	16	11	12
		7-20	Interior	57	57	48	57	57	43	57	53	38	57	47	34	57	43	31	54	39	28	49	35	26	41	30	22	35	25	19	30	22	16	26	19	14	23	17	12	20	15	11
			Exposed	57	42	31	52	38	28	47	34	25	42	30	22	38	27	20	34	25	18	31	23	17	26	19	14	22	16	12	19	14	10	17	12	9	15	11	12	13	10	11
		20-27	Interior	58	58	58	58	58	52	58	57	46	58	51	42	58	46	38	58	42	34	58	38	31	56	32	26	48	27	22	41	24	19	35	20	17	31	18	15	28	16	13
			Exposed	58	46	38	58	41	33	58	36	30	57	33	27	52	30	24	47	27	22	43	25	20	36	21	17	31	18	15	26	15	13	23	13	11	20	12	10	18	10	9
		27-45	Interior	59	59	59	59	59	59	59	59	56	59	59	50	59	58	45	59	52	41	53	48	37	45	40	32	38	34	27	33	30	23	29	26	20	25	23	18	22	20	16
			Exposed	59	57	45	57	51	40	51	46	36	46	41	32	42	37	29	38	34	27	34	31	24	29	26	21	25	22	18	21	19	15	19	17	13	16	15	12	15	13	10
	C	0-7	Interior	57	54	37	57	48	33	57	43	30	54	38	27	48	35	24	44	31	22	40	29	20	33	24	17	28	21	14	25	18	12	21	15	11	19	14	10	17	12	8
			Exposed	48	34	24	43	31	21	38	27	19	34	25	17	31	22	16	28	20	14	26	19	13	22	16	11	18	13	9	16	11	8	14	10	11	12	9	9	11	12	8
		7-20	Interior	57	45	33	56	40	29	50	36	26	44	32	23	40	29	21	36	26	19	33	24	18	28	20	15	24	17	13	21	15	11	18	13	10	16	11	8	14	10	11
			Exposed	40	29	21	36	26	19	32	23	17	29	21	15	26	19	14	24	17	13	21	16	11	18	13	10	15	11	8	13	10	11	12	8	9	10	11	8	9	10	7
		20-27	Interior	58	49	40	58	43	35	58	39	32	58	35	28	55	31	26	50	28	23	45	26	21	38	22	18	32	19	15	28	16	13	24	14	12	21	12	10	19	11	9
			Exposed	55	31	26	48	28	23	43	25	20	39	22	18	35	20	17	32	18	15	29	17	14	25	14	12	21	12	10	18	10	9	16	9	11	14	8	10	12	11	9
		27-45	Interior	59	59	48	59	54	42	54	48	38	49	43	34	44	39	31	40	36	28	36	33	26	31	28	22	26	24	19	23	20	16	20	18	14	17	16	12	15	14	11
			Exposed	44	39	31	39	35	27	35	31	25	31	28	22	29	25	20	26	23	18	24	21	17	20	18	14	17	15	12	15	13	10	13	12	9	11	10	12	10	9	11
	D	0-7	Interior	57	44	31	55	39	27	49	35	25	44	32	22	40	29	20	36	26	18	33	24	17	28	20	14	24	17	12	20	15	10	18	13	9	16	11	12	14	10	11
			Exposed	40	28	20	35	25	18	31	23	16	28	20	14	26	19	13	23	17	12	21	15	11	18	13	9	15	11	12	13	10	10	11	8	9	10	11	8	9	10	7
		7-20	Interior	52	37	27	46	33	24	41	29	22	37	27	19	33	24	18	30	22	16	27	20	15	23	17	12	20	14	11	17	12	9	15	11	12	13	9	11	12	8	9
			Exposed	33	24	18	29	21	16	26	19	14	24	17	13	21	16	11	19	14	10	18	13	10	15	11	12	13	9	10	11	12	9	10	11	8	8	9	7	11	8	6
		20-27	Interior	58	40	33	58	36	29	56	32	26	50	29	24	45	26	21	41	24	19	37	22	18	31	18	15	27	16	13	23	13	11	20	12	10	18	10	8	16	9	11
			Exposed	45	26	21	40	23	19	36	21	17	32	19	15	29	17	14	26	15	13	24	14	12	20	12	10	17	10	8	15	9	11	13	12	10	11	10	8	10	9	7
		27-45	Interior	56	50	39	50	45	35	45	40	31	40	36	28	36	33	26	33	30	23	30	27	21	26	23	18	22	20	15	19	17	13	16	15	12	14	13	10	13	11	9
			Exposed	36	32	26	32	29	23	29	26	20	26	23	18	24	21	17	22	19	15	20	18	14	17	15	12	14	13	10	12	11	9	11	10	12	9	8	10	8	11	9
10	B	0-7	Interior	46	46	46	46	46	46	46	46	44	46	46	39	46	46	35	46	46	32	46	42	29	46	35	25	42	30	21	36	26	18	31	23	16	27	20	14	24	17	12
			Exposed	46	46	35	46	45	31	46	40	28	46	36	25	46	33	23	41	30	21	38	27	19	32	23	16	27	19	14	23	17	12	20	15	10	18	13	9	16	11	12
		7-20	Interior	47	47	47	47	47	43	47	47	38	47	47	34	47	43	31	47	39	28	47	35	26	41	30	22	35	25	19	30	22	16	26	19	14	23	17	12	20	15	11
			Exposed	47	42	31	47	38	28	47	34	25	42	30	22	38	27	20	34	25	18	31	23	17	26	19	14	22	16	12	19	14	10	17	12	9	15	11	12	13	10	11
		20-27	Interior	53	53	53	53	53	52	53	53	46	53	51	42	53	46	38	53	42	34	53	38	31	53	32	26	48	27	22	41	24	19	35	20	17	31	18	15	28	16	13
			Exposed	53	46	38	53	41	33	53	36	30	53	33	27	52	30	24	47	27	22	43	25	20	36	21	17	31	18	15	26	15	13	23	13	11	20	12	10	18	10	9
		27-45	Interior	57	57	57	57	57	57	57	57	56	57	57	50	57	57	45	57	52	41	53	48	37	45	40	32	38	34	27	33	30	23	29	26	20	25	23	18	22	20	16
			Exposed	57	57	45	57	51	40	51	46	36	46	41	32	42	37	29	38	34	27	34	31	24	29	26	21	25	22	18	21	19	15	19	17	13	16	15	12	15	13	10
	C	0-7	Interior	46	46	37	46	46	33	46	43	30	46	38	27	46	35	24	44	31	22	40	29	20	33	24	17	28	21	14	25	18	12	21	15	11	19	14	10	17	12	8
			Exposed	46	34	24	43	31	21	38	27	19	34	25	17	31	22	16	28	20	14	26	19	13	22	16	11	18	13	9	16	11	8	14	10	11	12	9	9	11	12	8
		7-20	Interior	47	45	33	47	40	29	47	36	26	44	32	23	40	29	21	36	26	19	33	24	18	28	20	15	24	17	13	21	15	11	18	13	10	16	11	8	14	10	11
			Exposed	40	29	21	36	26	19	32	23	17	29	21	15	26	19	14	24	17	13	21	16	11	18	13	10	15	11	8	13	10	11	12	8	9	10	11	8	9	10	7
		20-27	Interior	53	49	40	53	43	35	53	39	32	53	35	28	53	31	26	50	28	23	45	26	21	38	22	18	32	19	15	28	16	13	24	14	12	21	12	10	19	11	9
			Exposed	53	31	26	48	28	23	43	25	20	39	22	18	35	20	17	32	18	15	29	17	14	25	14	12	21	12	10	18	10	9	16	9	11	14	8	10	12	11	9
		27-45	Interior	57	57	48	57	54	42	54	48	38	49	43	34	44	39	31	40	36	28	36	33	26	31	28	22	26	24	19	23	20	16	20	18	14	17	16	12	15	14	11
			Exposed	44	39	31	39	35	27	35	31	25	31	28	22	29	25	20	26	23	18	24	21	17	20	18	14	17	15	12	15	13	10	13	12	9	11	10	12	10	9	11
	D	0-7	Interior	46	44	31	46	39	27	46	35	25	44	32	22	40	29	20	36	26	18	33	24	17	28	20	14	24	17	12	20	15	10	18	13	9	16	11	12	14	10	11
			Exposed	40	28	20	35	25	18	31	23	16	28	20	14	26	19	13	23	17	12	21	15	11	18	13	9	15	11	12	13	10	10	11	8	9	10	11	8	9	10	7
		7-20	Interior	47	37	27	46	33	24	41	29	22	37	27	19	33	24	18	30	22	16	27	20	15	23	17	12	20	14	11	17	12	9	15	11	12	13	9	11	12	8	9
			Exposed	33	24	18	29	21	16	26	19	14	24	17	13	21	16	11	19	14	10	18	13	10	15	11	12	13	9	10	11	12	9	10	11	8	8	9	7	11	8	6
		20-27	Interior	55	40	33	55	36	29	55	32	26	50	29	24	45	26	21	41	24	19	37	22	18	31	18	15	27	16	13	23	13	11	20	12	10	18	10	8	16	9	11
			Exposed	45	26	21	40	23	19	36	21	17	32	19	15	29	17	14	26	15	13	24	14	12	20	12	10	17	10	8	15	9	11	13	12	10	11	10	8	10	9	7
		27-45	Interior	56	50	39	50	45	35	45	40	31	40	36	28	36	33	26	33	30	23	30	27	21	26	23	18	22	20	15	19	17	13	16	15	12	14	13	10	13	11	9
			Exposed	36	32	26	32	29	23	29	26	20	26	23	18	24	21	17	22	19	15	20	18	14	17	15	12	14	13	10	12	11	9	11	10	12	9	8	10	8	11	9
20	B	0-7	Interior	34	34	34	34	34	34	34	34	34	34	34	34	34	34	34	34	34	32	34	34	29	34	34	25	34	30	21	34	26	18	31	23	16	27	20	14	24	17	12
			Exposed	34	34	34	34	34	31	34	34	28	34	34	25	34	33	23	34	30	21	34	27	19	32	23	16	27	19	14	23	17	12	20	15	10	18	13	9	16	11	12
		7-20	Interior	35	35	35	35	35	35	35	35	35	35	35	34	35	35	31	35	35	28	35	35	26	35	30	22	35	25	19	30	22	16	26	19	14	23	17	12	20	15	11
			Exposed	35	35	31	35	35	28	35	34	25	35	30	22	35	27	20	34	25	18	31	23	17	26	19	14	22	16	12	19	14	10	17	12	9	15	11	12	13	10	11
		20-27	Interior	42	42	42	42	42	42	42	42	42	42	42	42	42	42	38	42	42	34	42	38	31	42	32	26	42	27	22	41	24	19	35	20	17	31	18	15	28	16	13
			Exposed	42	42	38	42	41	33	42	36	30	42	33	27	42	30	24	42	27	22	42	25	20	36	21	17	31	18	15	26	15	13	23	13	11	20	12	10	18	10	9
		27-45	Interior	47	47	47	47	47	47	47	47	47	47	47	47	47	47	45	47	47	41	47	47	37	45	40	32	38	34	27	33	30	23	29	26	20	25	23	18	22	20	16
			Exposed	47	47	45	47	47	40	47	46	36	46	41	32	42	37	29	38	34	27	34	31	24	29	26	21	25	22	18	21	19	15	19	17	13	16	15	12	15	13	10
	C	0-7	Interior	34	34	34	34	34	33	34	34	30	34	34	27	34	34	24	34	31	22	34	29	20	33	24	17	28	21	14	25	18	12	21	15	11	19	14	10	17	12	8
			Exposed	34	34	24	34	31	21	34	27	19	34	25	17	31	22	16	28	20	14	26	19	13	22	16	11	18	13	9	16	11	8	14	10	11	12	9	9	11	12	8
		7-20	Interior	35	35	33	35	35	29	35	35	26	35	32	23	35	29	21	35	26	19	33	24	18	28	20	15	24	17	13	21	15	11	18	13	10	16	11	8	14	10	11
			Exposed	35	29	21	35	26	19	32	23	17	29	21	15	26	19	14	24	17	13	21	16	11	18	13	10	15	11	8	13	10	11	12	8	9	10	11	8	9	10	7
		20-27	Interior	42	42	40	42	42	35	42	39	32	42	35	28	42	31	26	42	28	23	42	26	21	38	22	18	32	19	15	28	16	13	24	14	12	21	12	10	19	11	9
			Exposed	42	31	26	42	28	23	42	25	20	39	22	18	35	20	17	32	18	15	29	17	14	25	14	12	21	12	10	18	10	9	16	9	11	14	8	10	12	11	9
		27-45	Interior	47	47	47	47	47	42	47	47	38	47	43	34	44	39	31	40	36	28	36	33	26	31	28	22	26	24	19	23	20	16	20	18	14	17	16	12	15	14	11
			Exposed	44	39	31	39	35	27	35	31	25	31	28	22	29	25	20	26	23	18	24	21	17	20	18	14	17	15	12	15	13	10	13	12	9	11	10	12	10	9	11
	D	0-7	Interior	34	34	31	34	34	27	34	34	25	34	32	22	34	29	20	34	26	18	33	24	17	28	20	14	24	17	12	20	15	10	18	13	9	16	11	12	14	10	11
			Exposed	34	28	20	34	25	18	31	23	16	28	20	14	26	19	13	23	17	12	21	15	11	18	13	9	15	11	12	13	10	10	11	8	9	10	11	8	9	10	7
		7-20	Interior	35	35	27	35	33	24	35	29	22	35	27	19	33	24	18	30	22	16	27	20	15	23	17	12	20	14	11	17	12	9	15	11	12	13	9	11	12	8	9
			Exposed	33	24	18	29	21	16	26	19	14	24	17	13	21	16	11	19	14	10	18	13	10	15	11	12	13	9	10	11	12	9	10	11	8	8	9	7	11	8	6
		20-27	Interior	44	40	33	44	36	29	44	32	26	44	29	24	44	26	21	41	24	19	37	22	18	31	18	15	27	16	13	23	13	11	20	12	10	18	10	8	16	9	11
			Exposed	44	26	21	40	23	19	36	21	17	32	19	15	29	17	14	26	15	13	24	14	12	20	12	10	17	10	8	15	9	11	13	12	10	11	10	8	10	9	7
		27-45	Interior	48	48	39	48	45	35	45	40	31	40	36	28	36	33	26	33	30	23	30	27	21	26	23	18	22	20	15	19	17	13	16	15	12	14	13	10	13	11	9
			Exposed	36	32	26	32	29	23	29	26	20	26	23	18	24	21	17	22	19	15	20	18	14	17	15	12	14	13	10	12	11	9	11	10	12	9	8	10	8	11	9

* Cells with an astrisks indicates that the L-foot must be oriented in the Y- direction as indicated in the image.

10 Highlighted cell indicate 3-rail system span. Contact Unirac Engineering Services for support.

~~10~~ Highlighted cell with strikethrough indicate 3-rail system span and module clamp allowable capacity exceeds with 3-rails. 4-Rail system required. Contact Unirac Engineering Services for support.

UNIRAC

ASCE 7-22	II	30 ft	Ss = 1.25	19 sq.ft	LANDSCAPE	CROSS-SLOPE	NXT	NXT COMBO	Stronghold BUTYL OSB
Design Standard	Risk Category	Roof Height	Seismic	Module Area	Orientation	Rail Direction	Rail Type	Clamp	Attachment

SPAN TABLES

Maximum Allowable Rail Spans for Rooftop Solar Panels Parallel to the Roof Surface (inches)

Ground Snow Load (psf)	Wind Exposure Category	Roof Tilt Angle (deg)	Panel Exposure	Basic Wind Speed (mph)																																						
				90			95			100			105			110			115			120			130			140			150			160			170			180		
				Roof Wind Zone																																						
				1	2	3	1	2	3	1	2	3	1	2	3	1	2	3	1	2	3	1	2	3	1	2	3	1	2	3	1	2	3	1	2	3	1	2	3	1	2	3
30	B	0-7	Interior	27	27	27	27	27	27	27	27	27	27	27	27	27	27	27	27	27	27	27	27	27	27	27	25	27	27	21	27	26	18	27	23	16	27	20	14	24	17	12
			Exposed	27	27	27	27	27	27	27	27	27	27	27	25	27	27	23	27	27	21	27	27	19	27	23	16	27	19	14	23	17	12	20	15	10	18	13	9	16	11	12
		7-20	Interior	27	27	27	27	27	27	27	27	27	27	27	27	27	27	27	27	27	27	27	27	26	27	27	22	27	25	19	27	22	16	26	19	14	23	17	12	20	15	11
			Exposed	27	27	27	27	27	27	27	27	25	27	27	22	27	27	20	27	25	18	27	23	17	26	19	14	22	16	12	19	14	10	17	12	9	15	11	12	13	10	11
		20-27	Interior	35	35	35	35	35	35	35	35	35	35	35	35	35	35	35	35	35	34	35	35	31	35	32	26	35	27	22	35	24	19	35	20	17	31	18	15	28	16	13
			Exposed	35	35	35	35	35	33	35	35	30	35	33	27	35	30	24	35	27	22	35	25	20	35	21	17	31	18	15	26	15	13	23	13	11	20	12	10	18	10	9
		27-45	Interior	39	39	39	39	39	39	39	39	39	39	39	39	39	39	39	39	39	39	39	39	37	39	39	32	38	34	27	33	30	23	29	26	20	25	23	18	22	20	16
			Exposed	39	39	39	39	39	39	39	39	36	39	39	32	39	37	29	38	34	27	34	31	24	29	26	21	25	22	18	21	19	15	19	17	13	16	15	12	15	13	10
	C	0-7	Interior	27	27	27	27	27	27	27	27	27	27	27	27	27	27	24	27	27	22	27	27	20	27	24	17	27	21	14	25	18	12	21	15	11	19	14	10	17	12	8
			Exposed	27	27	24	27	27	21	27	27	19	27	25	17	27	22	16	27	20	14	26	19	13	22	16	11	18	13	9	16	11	8	14	10	11	12	9	9	11	12	8
		7-20	Interior	27	27	27	27	27	27	27	27	26	27	27	23	27	27	21	27	26	19	27	24	18	27	20	15	24	17	13	21	15	11	18	13	10	16	11	8	14	10	11
			Exposed	27	27	21	27	26	19	27	23	17	27	21	15	26	19	14	24	17	13	21	16	11	18	13	10	15	11	8	13	10	11	12	8	9	10	11	8	9	10	7
		20-27	Interior	35	35	35	35	35	35	35	35	32	35	35	28	35	31	26	35	28	23	35	26	21	35	22	18	32	19	15	28	16	13	24	14	12	21	12	10	19	11	9
			Exposed	35	31	26	35	28	23	35	25	20	35	22	18	35	20	17	32	18	15	29	17	14	25	14	12	21	12	10	18	10	9	16	9	11	14	8	10	12	11	9
		27-45	Interior	39	39	39	39	39	39	39	39	38	39	39	34	39	39	31	38	36	28	36	33	26	31	28	22	26	24	19	23	20	16	20	18	14	17	16	12	15	14	11
			Exposed	39	39	31	39	35	27	35	31	25	31	28	22	29	25	20	26	23	18	24	21	17	20	18	14	17	15	12	15	13	10	13	12	9	11	10	12	10	9	11
	D	0-7	Interior	27	27	27	27	27	27	27	27	25	27	27	22	27	27	20	27	26	18	27	24	17	27	20	14	24	17	12	20	15	10	18	13	9	16	11	12	14	10	11
			Exposed	27	27	20	27	25	18	27	23	16	27	20	14	26	19	13	23	17	12	21	15	11	18	13	9	15	11	12	13	10	10	11	8	9	10	11	8	9	10	7
		7-20	Interior	27	27	27	27	27	24	27	27	22	27	27	19	27	24	18	27	22	16	27	20	15	23	17	12	20	14	11	17	12	9	15	11	12	13	9	11	12	8	9
			Exposed	27	24	18	27	21	16	26	19	14	24	17	13	21	16	11	19	14	10	18	13	10	15	11	12	13	9	10	11	12	9	10	11	8	8	9	7	11	8	6
		20-27	Interior	36	36	33	36	36	29	36	32	26	36	29	24	36	26	21	36	24	19	36	22	18	31	18	15	27	16	13	23	13	11	20	12	10	18	10	8	16	9	11
			Exposed	36	26	21	36	23	19	36	21	17	32	19	15	29	17	14	26	15	13	24	14	12	20	12	10	17	10	8	15	9	11	13	12	10	11	10	8	10	9	7
		27-45	Interior	41	41	39	41	41	35	41	40	31	40	36	28	36	33	26	33	30	23	30	27	21	26	23	18	22	20	15	19	17	13	16	15	12	14	13	10	13	11	9
			Exposed	36	32	26	32	29	23	29	26	20	26	23	18	24	21	17	22	19	15	20	18	14	17	15	12	14	13	10	12	11	9	11	10	12	9	8	10	8	11	9
40	B	0-7	Interior	25	25	25	25	25	25	25	25	25	25	25	25	25	25	25	25	25	25	25	25	25	25	25	21	25	25	21	25	25	18	25	23	16	25	20	14	24	17	12
			Exposed	25	25	25	25	25	25	25	25	25	25	25	25	25	25	23	25	25	21	25	25	19	25	23	16	25	19	14	23	17	12	20	15	10	18	13	9	16	11	12
		7-20	Interior	26	26	26	26	26	26	26	26	26	26	26	26	26	26	26	26	26	26	26	26	26	26	26	22	26	25	19	26	22	16	26	19	14	23	17	12	20	15	11
			Exposed	26	26	26	26	26	26	26	26	25	26	26	22	26	26	20	26	25	18	26	23	17	26	19	14	22	16	12	19	14	10	17	12	9	15	11	12	13	10	11
		20-27	Interior	29	29	29	29	29	29	29	29	29	29	29	29	29	29	29	29	29	29	29	29	29	29	29	26	29	27	22	29	24	19	29	20	17	29	18	15	28	16	13
			Exposed	29	29	29	29	29	29	29	29	29	29	29	27	29	29	24	29	27	22	29	25	20	29	21	17	29	18	15	26	15	13	23	13	11	20	12	10	18	10	9
		27-45	Interior	34	34	34	34	34	34	34	34	34	34	34	34	34	34	34	34	34	34	34	34	34	34	34	32	33	33	27	31	30	23	29	26	20	25	23	18	22	20	16
			Exposed	34	34	34	34	34	34	34	34	34	34	34	32	34	34	29	34	34	27	34	31	24	29	26	21	25	22	18	21	19	15	19	17	13	16	15	12	15	13	10
	C	0-7	Interior	25	25	25	25	25	25	25	25	25	25	25	25	25	25	24	25	25	22	25	25	20	25	24	17	25	21	14	25	18	12	21	15	11	19	14	10	17	12	8
			Exposed	25	25	24	25	25	21	25	25	19	25	25	17	25	22	16	25	20	14	25	19	13	22	16	11	18	13	9	16	11	8	14	10	11	12	9	9	11	12	8
		7-20	Interior	26	26	26	26	26	26	26	26	26	26	26	23	26	26	21	26	26	19	26	24	18	26	20	15	24	17	13	21	15	11	18	13	10	16	11	8	14	10	11
			Exposed	26	26	21	26	26	19	26	23	17	26	21	15	26	19	14	24	17	13	21	16	11	18	13	10	15	11	8	13	10	11	12	8	9	10	11	8	9	10	7
		20-27	Interior	29	29	29	29	29	29	29	29	29	29	29	28	29	29	26	29	28	23	29	26	21	29	22	18	29	19	15	28	16	13	24	14	12	21	12	10	19	11	9
			Exposed	29	29	26	29	28	23	29	25	20	29	22	18	29	20	17	29	18	15	29	17	14	25	14	12	21	12	10	18	10	9	16	9	11	14	8	10	12	11	9
		27-45	Interior	34	34	34	34	34	34	34	34	34	34	34	34	34	34	31	33	33	28	32	32	26	30	28	22	26	24	19	23	20	16	20	18	14	17	16	12	15	14	11
			Exposed	34	34	31	34	34	27	34	31	25	31	28	22	29	25	20	26	23	18	24	21	17	20	18	14	17	15	12	15	13	10	13	12	9	11	10	12	10	9	11
	D	0-7	Interior	27	27	27	27	27	27	27	27	25	27	27	22	27	27	20	27	26	18	27	24	17	27	20	14	24	17	12	20	15	10	18	13	9	16	11	12	14	10	11
			Exposed	27	27	20	27	25	18	27	23	16	27	20	14	26	19	13	23	17	12	21	15	11	18	13	9	15	11	12	13	10	10	11	8	9	10	11	8	9	10	7
		7-20	Interior	27	27	27	27	27	24	27	27	22	27	27	19	27	24	18	27	22	16	27	20	15	23	17	12	20	14	11	17	12	9	15	11	12	13	9	11	12	8	9
			Exposed	27	24	18	27	21	16	26	19	14	24	17	13	21	16	11	19	14	10	18	13	10	15	11	12	13	9	10	11	12	9	10	11	8	8	9	7	11	8	6
		20-27	Interior	31	31	31	31	31	29	31	31	26	31	29	24	31	26	21	31	24	19	31	22	18	31	18	15	27	16	13	23	13	11	20	12	10	18	10	8	16	9	11
			Exposed	31	26	21	31	23	19	31	21	17	31	19	15	29	17	14	26	15	13	24	14	12	20	12	10	17	10	8	15	9	11	13	12	10	11	10	8	10	9	7
		27-45	Interior	36	36	36	36	36	35	36	36	31	35	35	28	34	33	26	33	30	23	30	27	21	26	23	18	22	20	15	19	17	13	16	15	12	14	13	10	13	11	9
			Exposed	36	32	26	32	29	23	29	26	20	26	23	18	24	21	17	22	19	15	20	18	14	17	15	12	14	13	10	12	11	9	11	10	12	9	8	10	8	11	9
50	B	0-7	Interior	22	22	22	22	22	22	22	22	22	22	22	22	22	22	22	22	22	22	22	22	22	22	22	21	22	22	21	22	22	18	22	22	16	22	20	14	22	17	12
			Exposed	22	22	22	22	22	22	22	22	22	22	22	22	22	22	22	22	22	21	22	22	19	22	22	16	22	19	14	22	17	12	20	15	10	18	13	9	16	11	12
		7-20	Interior	22	22	22	22	22	22	22	22	22	22	22	22	22	22	22	22	22	22	22	22	22	22	22	22	22	22	19	22	22	16	22	19	14	22	17	12	20	15	11
			Exposed	22	22	22	22	22	22	22	22	22	22	22	22	22	22	20	22	22	18	22	22	17	22	19	14	22	16	12	19	14	10	17	12	9	15	11	12	13	10	11
		20-27	Interior	26	26	26	26	26	26	26	26	26	26	26	26	26	26	26	26	26	26	26	26	26	26	26	22	26	24	19	26	20	17	25	18	15	24	16	13	24	16	13
			Exposed	26	26	26	26	26	26	26	26	26	26	26	26	26	26	24	26	26	22	26	25	20	26	21	17	26	18	15	26	15	13	23	13	11	20	12	10	18	10	9
		27-45	Interior	30	30	30	30	30	30	30	30	30	30	30	30	30	30	30	30	30	30	30	30	30	30	30	30	29	29	27	28	28	23	26	26	20	25	23	18	22	20	16
			Exposed	30	30	30	30	30	30	30	30	30	30	30	30	30	30	29	30	30	27	30	30	24	29	26	21	25	22	18	21	19	15	19	17	13	16	15	12	15	13	10
	C	0-7	Interior	22	22	22	22	22	22	22	22	22	22	22	22	22	22	22	22	22	22	22	22	20	22	22	17	22	21	14	22	18	12	21	15	11	19	14	10	17	12	8
			Exposed	22	22	22	22	22	21	22	22	19	22	22	17	22	22	16	22	20	14	22	19	13	22	16	11	18	13	9	16	11	8	14	10	11	12	9	9	11	12	8
		7-20	Interior	22	22	22	22	22	22	22	22	22	22	22	22	22	22	21	22	22	19	22	22	18	22	20	15	22	17	13	21	15	11	18	13	10	16	11	8	14	10	11
			Exposed	22	22	21	22	22	19	22	22	17	22	21	15	22	19	14	22	17	13	21	16	11	18	13	10	15	11	8	13	10	11	12	8	9	10	11	8	9	10	7
		20-27	Interior	26	26	26	26	26	26	26	26	26	26	26	26	26	26	26	26	26	23	26	26	21	26	22	18	25	19	15	24	16	13	23	14	12	21	12	10	19	11	9
			Exposed	26	26	26	26	26	23	26	25	20	26	22	18	26	20	17	26	18	15	26	17	14	25	14	12	21	12	10	18	10	9	16	9	11	14	8	10	12	11	9
		27-45	Interior	30	30	30	30	30	30	30	30	30	30	30	30	30	30	30	29	29	28	29	29	26	27	27	22	25	24	19	23	20	16	20	18	14	17	16	12	15	14	11
			Exposed	30	30	30	30	30	27	30	30	25	30	28	22	29	25	20	26	23	18	24	21	17	20	18	14	17	15	12	15	13	10	13	12	9	11	10	12	10	9	11
	D	0-7	Interior	23	23	23	23	23	23	23	23	23	23	23	22	23	23	20	23	23	18	23	23	17	23	20	14	23	17	12	20	15	10	18	13	9	16	11	12	14	10	11
			Exposed	23	23	20	23	23	18	23	23	16	23	20	14	23	19	13	23	17	12	21	15	11	18	13	9	15	11	12	13	10	10	11	8	9	10	11	8	9	10	7
		7-20	Interior	24	24	24	24	24	24	24	24	22	24	24	19	24	24	18	24	22	16	24	20	15	23	17	12	20	14	11	17	12	9	15	11	12	13	9	11	12	8	9
			Exposed	24	24	18	24	21	16	24	19	14	24	17	13	21	16	11	19	14	10	18	13	10	15	11	12	13	9	10	11	12	9	10	11	8	8	9	7	11	8	6
		20-27	Interior	27	27	27	27	27	27	27	27	26	27	27	24	27	26	21	27	24	19	27	22	18	27	18	15	26	16	13	23	13	11	20	12	10	18	10	8	16	9	11
			Exposed	27	26	21	27	23	19	27	21	17	27	19	15	27	17	14	26	15	13	24	14	12	20	12	10	17	10	8	15	9	11	13	12	10	11	10	8	10	9	7
		27-45	Interior	32	32	32	32	32	32	32	32	31	31	31	28	30	30	26	29	29	23	28	27	21	26	23	18	22	20	15	19	17	13	16	15	12	14	13	10	13	11	9
			Exposed	32	32	26	32	29	23	29	26	20	26	23	18	24	21	17	22	19	15	20	18	14	17	15	12	14	13	10	12	11	9	11	10	12	9	8	10	8	11	9

* Cells with an astrisks indicates that the L-foot must be oriented in the Y- direction as indicated in the image.

10 Highlighted cell indicate 3-rail system span. Contact Unirac Engineering Services for support.

~~10~~ Highlighted cell with strikethrough indicate 3-rail system span and module clamp allowable capacity exceeds with 3-rails. 4-Rail system required. Contact Unirac Engineering Services for support.

UNIRAC

ASCE 7-22	II	30 ft	Ss = 1.25	19 sq.ft	LANDSCAPE	CROSS-SLOPE	NXT	NXT COMBO	Stronghold BUTYL OSB
Design Standard	Risk Category	Roof Height	Seismic	Module Area	Orientation	Rail Direction	Rail Type	Clamp	Attachment

SPAN TABLES

Maximum Allowable Rail Spans for Rooftop Solar Panels Parallel to the Roof Surface (inches)

Ground Snow Load (psf)	Wind Exposure Category	Roof Tilt Angle (deg)	Panel Exposure	Basic Wind Speed (mph)																																						
				90			95			100			105			110			115			120			130			140			150			160			170			180		
				Roof Wind Zone																																						
				1	2	3	1	2	3	1	2	3	1	2	3	1	2	3	1	2	3	1	2	3	1	2	3	1	2	3	1	2	3	1	2	3	1	2	3	1	2	3
60	B	0-7	Interior	18	18	18	18	18	18	18	18	18	18	18	18	18	18	18	18	18	18	18	18	18	18	18	18	18	18	18	18	18	18	18	18	16	18	18	14	18	17	12
			Exposed	18	18	18	18	18	18	18	18	18	18	18	18	18	18	18	18	18	18	18	18	18	18	18	16	18	18	14	18	17	12	18	15	10	18	13	9	16	11	12
		7-20	Interior	18	18	18	18	18	18	18	18	18	18	18	18	18	18	18	18	18	18	18	18	18	18	18	18	18	18	18	18	18	16	18	18	14	18	17	12	18	15	11
			Exposed	18	18	18	18	18	18	18	18	18	18	18	18	18	18	18	18	18	18	18	18	17	18	18	14	18	16	12	18	14	10	17	12	9	15	11	12	13	10	11
		20-27	Interior	23	23	23	23	23	23	23	23	23	23	23	23	23	23	23	23	23	23	23	23	23	23	23	22	23	23	22	23	23	19	23	20	17	22	18	15	21	16	13
			Exposed	23	23	23	23	23	23	23	23	23	23	23	23	23	23	23	23	23	22	23	23	20	23	21	17	23	18	15	23	15	13	23	13	11	20	12	10	18	10	9
		27-45	Interior	27	27	27	27	27	27	27	27	27	27	27	27	27	27	27	27	27	27	27	27	27	27	27	27	26	26	26	25	25	23	24	24	20	23	23	18	22	20	16
			Exposed	27	27	27	27	27	27	27	27	27	27	27	27	27	27	27	27	27	27	27	27	24	27	26	21	25	22	18	21	19	15	19	17	13	16	15	12	15	13	10
	C	0-7	Interior	18	18	18	18	18	18	18	18	18	18	18	18	18	18	18	18	18	18	18	18	18	18	18	17	18	18	14	18	18	12	18	15	11	18	14	10	17	12	8
			Exposed	18	18	18	18	18	18	18	18	18	18	17	18	18	16	18	18	14	18	18	13	18	16	11	18	13	9	16	11	8	14	10	11	12	9	9	11	12	8
		7-20	Interior	18	18	18	18	18	18	18	18	18	18	18	18	18	18	18	18	18	18	18	18	18	18	18	15	18	17	13	18	15	11	18	13	10	16	11	8	14	10	11
			Exposed	18	18	18	18	18	18	18	18	17	18	18	15	18	18	14	18	17	13	18	16	11	18	13	10	15	11	8	13	10	11	12	8	9	10	11	8	9	10	7
		20-27	Interior	23	23	23	23	23	23	23	23	23	23	23	23	23	23	23	23	23	23	23	23	21	23	22	18	22	19	15	22	16	13	21	14	12	20	12	10	19	11	9
			Exposed	23	23	23	23	23	23	23	23	20	23	22	18	23	20	17	23	18	15	23	17	14	23	14	12	21	12	10	18	10	9	16	9	11	14	8	10	12	11	9
		27-45	Interior	27	27	27	27	27	27	27	27	27	27	27	27	27	27	27	26	26	26	26	26	26	24	24	22	23	23	19	22	20	16	20	18	14	17	16	12	15	14	11
			Exposed	27	27	27	27	27	27	27	27	25	27	27	22	27	25	20	26	23	18	24	21	17	20	18	14	17	15	12	15	13	10	13	12	9	11	10	12	10	9	11
	D	0-7	Interior	20	20	20	20	20	20	20	20	20	20	20	20	20	20	20	20	20	18	20	20	17	20	20	14	20	17	12	20	15	10	18	13	9	16	11	12	14	10	11
			Exposed	20	20	20	20	20	18	20	20	16	20	20	14	20	19	13	20	17	12	20	15	11	18	13	9	15	11	12	13	10	10	11	8	9	10	11	8	9	10	7
		7-20	Interior	20	20	20	20	20	20	20	20	20	20	20	19	20	20	18	20	20	16	20	20	15	20	17	12	20	14	11	17	12	9	15	11	12	13	9	11	12	8	9
			Exposed	20	20	18	20	20	16	20	19	14	20	17	13	20	16	11	19	14	10	18	13	10	15	11	12	13	9	10	11	12	9	10	11	8	8	9	7	11	8	6
		20-27	Interior	24	24	24	24	24	24	24	24	24	24	24	24	24	21	24	24	19	24	22	18	24	18	15	23	16	13	22	13	11	20	12	10	18	10	8	16	9	11
			Exposed	24	24	21	24	23	19	24	21	17	24	19	15	24	17	14	24	15	13	24	14	12	20	12	10	17	10	8	15	9	11	13	12	10	11	10	8	10	9	7
		27-45	Interior	29	29	29	29	29	29	29	29	29	28	28	28	27	27	26	27	27	23	26	26	21	24	23	18	22	20	15	19	17	13	16	15	12	14	13	10	13	11	9
			Exposed	29	29	26	29	29	23	29	26	20	26	23	18	24	21	17	22	19	15	20	18	14	17	15	12	14	13	10	12	11	9	11	10	12	9	8	10	8	11	9
70	B	0-7	Interior	16	16	16	16	16	16	16	16	16	16	16	16	16	16	16	16	16	16	16	16	16	16	16	16	16	16	16	16	16	16	16	16	16	16	16	14	16	16	12
			Exposed	16	16	16	16	16	16	16	16	16	16	16	16	16	16	16	16	16	16	16	16	16	16	16	16	16	16	14	16	16	12	16	15	10	16	13	9	16	11	12
		7-20	Interior	16	16	16	16	16	16	16	16	16	16	16	16	16	16	16	16	16	16	16	16	16	16	16	16	16	16	16	16	16	16	16	16	14	16	16	12	16	15	11
			Exposed	16	16	16	16	16	16	16	16	16	16	16	16	16	16	16	16	16	16	16	16	16	16	16	14	16	16	12	16	14	10	16	12	9	15	11	12	13	10	11
		20-27	Interior	20	20	20	20	20	20	20	20	20	20	20	20	20	20	20	20	20	20	20	20	20	20	20	20	20	20	20	20	20	19	20	20	17	20	18	15	19	16	13
			Exposed	20	20	20	20	20	20	20	20	20	20	20	20	20	20	20	20	20	20	20	20	20	20	20	17	20	18	15	20	15	13	20	13	11	20	12	10	18	10	9
		27-45	Interior	24	24	24	24	24	24	24	24	24	24	24	24	24	24	24	24	24	24	24	24	24	24	24	24	24	24	24	23	23	23	22	22	20	21	21	18	20	20	16
			Exposed	24	24	24	24	24	24	24	24	24	24	24	24	24	24	24	24	24	24	24	24	24	24	24	21	24	22	18	21	19	15	19	17	13	16	15	12	15	13	10
	C	0-7	Interior	16	16	16	16	16	16	16	16	16	16	16	16	16	16	16	16	16	16	16	16	16	16	16	16	16	16	14	16	16	12	16	15	11	16	14	10	16	12	8
			Exposed	16	16	16	16	16	16	16	16	16	16	16	16	16	16	16	16	14	16	16	13	16	16	11	16	13	9	16	11	8	14	10	11	12	9	9	11	12	8
		7-20	Interior	16	16	16	16	16	16	16	16	16	16	16	16	16	16	16	16	16	16	16	16	16	16	16	15	16	16	13	16	15	11	16	13	10	16	11	8	14	10	11
			Exposed	16	16	16	16	16	16	16	16	16	16	16	15	16	16	14	16	16	13	16	16	11	16	13	10	15	11	8	13	10	11	12	8	9	10	11	8	9	10	7
		20-27	Interior	20	20	20	20	20	20	20	20	20	20	20	20	20	20	20	20	20	20	20	20	20	20	20	18	20	19	15	19	16	13	19	14	12	18	12	10	17	11	9
			Exposed	20	20	20	20	20	20	20	20	20	20	20	18	20	20	17	20	18	15	20	17	14	20	14	12	20	12	10	18	10	9	16	9	11	14	8	10	12	11	9
		27-45	Interior	24	24	24	24	24	24	24	24	24	24	24	22	24	24	20	24	23	18	23	23	23	22	22	22	21	21	19	20	20	16	19	18	14	17	16	12	15	14	11
			Exposed	24	24	24	24	24	23	24	24	20	23	23	18	24	21	17	22	19	15	20	18	14	17	15	12	14	13	10	12	11	9	11	10	12	9	8	10	8	11	9
	D	0-7	Interior	17	17	17	17	17	17	17	17	17	17	17	17	17	17	17	17	17	17	17	17	17	17	17	14	17	17	12	17	15	10	17	13	9	16	11	12	14	10	11
			Exposed	17	17	17	17	17	17	17	17	16	17	17	14	17	17	13	17	17	12	17	15	11	17	13	9	15	11	12	13	10	10	11	8	9	10	11	8	9	10	7
		7-20	Interior	18	18	18	18	18	18	18	18	18	18	18	18	18	18	18	18	18	16	18	18	15	18	17	12	18	14	11	17	12	9	15	11	12	13	9	11	12	8	9
			Exposed	18	18	18	18	18	16	18	18	14	18	17	13	18	16	11	18	14	10	18	13	10	15	11	12	13	9	10	11	12	9	10	11	8	8	9	7	11	8	6
		20-27	Interior	22	22	22	22	22	22	22	22	22	22	22	22	22	21	22	22	19	22	22	18	21	18	15	21	16	13	20	13	11	19	12	10	18	10	8	16	9	11
			Exposed	22	22	21	22	22	19	22	21	17	22	19	15	22	17	14	22	15	13	22	14	12	20	12	10	17	10	8	15	9	11	13	12	10	11	10	8	10	9	7
		27-45	Interior	26	26	26	26	26	26	26	26	26	26	26	26	25	25	25	24	24	23	24	24	21	22	22	18	21	20	15	19	17	13	16	15	12	14	13	10	13	11	9
			Exposed	26	26	26	26	26	23	26	26	20	26	23	18	24	21	17	22	19	15	20	18	14	17	15	12	14	13	10	12	11	9	11	10	12	9	8	10	8	11	9
80	B	0-7	Interior	14	14	14	14	14	14	14	14	14	14	14	14	14	14	14	14	14	14	14	14	14	14	14	14	14	14	14	14	14	14	14	14	14	14	14	14	14	14	12
			Exposed	14	14	14	14	14	14	14	14	14	14	14	14	14	14	14	14	14	14	14	14	14	14	14	14	14	14	14	14	14	12	14	14	10	14	13	9	14	11	12
		7-20	Interior	14	14	14	14	14	14	14	14	14	14	14	14	14	14	14	14	14	14	14	14	14	14	14	14	14	14	14	14	14	14	14	14	14	14	14	12	14	14	11
			Exposed	14	14	14	14	14	14	14	14	14	14	14	14	14	14	14	14	14	14	14	14	14	14	14	14	14	14	12	14	14	10	14	12	9	14	11	12	13	10	11
		20-27	Interior	17	17	17	17	17	17	17	17	17	17	17	17	17	17	17	17	17	17	17	17	17	17	17	17	17	17	17	17	17	17	17	17	17	17	17	15	17	16	13
			Exposed	17	17	17	17	17	17	17	17	17	17	17	17	17	17	17	17	17	17	17	17	17	17	17	17	17	17	15	17	15	13	17	13	11	17	12	10	17	10	9
		27-45	Interior	22	22	22	22	22	22	22	22	22	22	22	22	22	22	22	22	22	22	22	22	22	22	22	22	21	21	21	21	21	21	20	20	20	19	19	18	18	18	16
			Exposed	22	22	22	22	22	22	22	22	22	22	22	22	22	22	22	22	22	22	22	22	22	22	22	21	21	21	18	21	19	15	19	17	13	16	15	12	15	13	10
	C	0-7	Interior	14	14	14	14	14	14	14	14	14	14	14	14	14	14	14	14	14	14	14	14	14	14	14	14	14	14	14	14	14	12	14	14	11	14	14	10	14	12	8
			Exposed	14	14	14	14	14	14	14	14	14	14	14	14	14	14	14	14	14	14	14	14	13	14	14	11	14	13	9	14	11	8	14	10	11	12	9	9	11	12	8
		7-20	Interior	14	14	14	14	14	14	14	14	14	14	14	14	14	14	14	14	14	14	14	14	14	14	14	14	14	14	13	14	14	11	14	13	10	14	11	8	14	10	11
			Exposed	14	14	14	14	14	14	14	14	14	14	14	14	14	14	14	14	14	13	14	14	11	14	13	10	14	11	8	13	10	11	12	8	9	10	11	8	9	10	7
		20-27	Interior	17	17	17	17	17	17	17	17	17	17	17	17	17	17	17	17	17	17	17	17	17	17	17	17	17	17	15	17	16	13	17	14	12	17	12	10	16	11	9
			Exposed	17	17	17	17	17	17	17	17	17	17	17	17	17	17	17	17	17	15	17	17	14	17	14	12	17	12	10	17	10	9	16	9	11	14	8	10	12	11	9
		27-45	Interior	22	22	22	22	22	22	22	22	22	22	22	22	22	22	22	22	22	22	21	21	21	20	20	20	19	19	19	19	19	16	18	18	14	17	16	12	15	14	11
			Exposed	22	22	22	22	22	22	22	22	22	22	22	22	22	22	20	22	22	18	21	21	17	20	18	14	17	15	12	15	13	10	13	12	9	11	10	12	10	9	11
	D	0-7	Interior	15	15	15	15	15	15	15	15	15	15	15	15	15	15	15	15	15	15	15	15	15	15	15	14	15	15	12	15	15	10	15	13	9	15	11	12	14	10	11
			Exposed	15	15	15	15	15	15	15	15	15	15	14	15	15	13	15	15	12	15	15	11	15	13	9	15	11	12	13	10	10	11	8	9	10	11	8	9	10	7
		7-20	Interior	15	15	15	15	15	15	15	15	15	15	15	15	15	15	15	15	15	15	15	15	15	15	15	12	15	14	11	15	12	9	15	11	12	13	9	11	12	8	9
			Exposed	15	15	15	15	15	15	15	15	14	15	15	13	15	15	11	15	14	10	15	13	10	15	11	12	13	9	10	11	12	9	10	11	8	8	9	7	11	8	6
		20-27	Interior	19	19	19	19	19	19	19	19	19	19	19	19	19	19	19	19	19	19	19	19	18	19	18	15	19	16	13	18	13	11	18	12	10	17	10	8	16	9	11
			Exposed	19	19	19	19	19	19	19	19	17	19	19	15	19	17	14	19	15	13	19	14	12	19	12	10	17	10	8	15	9	11	13	12	10	11	10	8	10	9	7
		27-45	Interior	24	24	24	24	24	24	24	24	24	23	23	23	23	23	23	22	22	22	22	22	21	21	21	18	19	19	15	18	17	13	16	15	12	14	13	10	13	11	9
			Exposed	24	24	24	24	24	23	24	24	20	23	23	18	23	21	17	22	19	15	20	18	14	17	15	12	14	13	10	12	11	9	11	10	12	9	8	10	8	11	9

* Cells with an astrisks indicates that the L-foot must be oriented in the Y- direction as indicated in the image.

10 Highlighted cell indicate 3-rail system span. Contact Unirac Engineering Services for support.

~~10~~ Highlighted cell with strikethrough indicate 3-rail system span and module clamp allowable capacity exceeds with 3-rails. 4-Rail system required. Contact Unirac Engineering Services for support.

UNIRAC

ASCE 7-22	II	30 ft	Ss = 1.25	19 sq.ft	LANDSCAPE	CROSS-SLOPE	NXT	NXT COMBO	Stronghold BUTYL OSB
Design Standard	Risk Category	Roof Height	Seismic	Module Area	Orientation	Rail Direction	Rail Type	Clamp	Attachment

SPAN TABLES

Maximum Allowable Rail Spans for Rooftop Solar Panels Parallel to the Roof Surface (inches)

Ground Snow Load (psf)	Wind Exposure Category	Roof Tilt Angle (deg)	Panel Exposure	Basic Wind Speed (mph)																																						
				90			95			100			105			110			115			120			130			140			150			160			170			180		
				Roof Wind Zone																																						
				1	2	3	1	2	3	1	2	3	1	2	3	1	2	3	1	2	3	1	2	3	1	2	3	1	2	3	1	2	3	1	2	3	1	2	3	1	2	3
90	B	0-7	Interior	12	12	12	12	12	12	12	12	12	12	12	12	12	12	12	12	12	12	12	12	12	12	12	12	12	12	12	12	12	12	12	12	12	12	12	12	12	12	12
			Exposed	12	12	12	12	12	12	12	12	12	12	12	12	12	12	12	12	12	12	12	12	12	12	12	12	12	12	12	12	12	12	12	12	10	12	12	9	12	11	12
		7-20	Interior	12	12	12	12	12	12	12	12	12	12	12	12	12	12	12	12	12	12	12	12	12	12	12	12	12	12	12	12	12	12	12	12	12	12	12	12	12	12	11
			Exposed	12	12	12	12	12	12	12	12	12	12	12	12	12	12	12	12	12	12	12	12	12	12	12	12	12	12	12	12	12	10	12	12	9	12	11	12	12	10	11
		20-27	Interior	15	15	15	15	15	15	15	15	15	15	15	15	15	15	15	15	15	15	15	15	15	15	15	15	15	15	15	15	15	15	15	15	15	15	15	15	15	15	13
			Exposed	15	15	15	15	15	15	15	15	15	15	15	15	15	15	15	15	15	15	15	15	15	15	15	15	15	15	15	15	15	13	15	13	11	15	12	10	15	10	9
		27-45	Interior	20	20	20	20	20	20	20	20	20	20	20	20	20	20	20	20	20	20	20	20	20	20	20	20	20	20	20	19	19	19	18	18	18	18	18	18	17	17	16
			Exposed	20	20	20	20	20	20	20	20	20	20	20	20	20	20	20	20	20	20	20	20	20	20	20	20	20	20	18	19	19	15	18	17	13	16	15	12	15	13	10
	C	0-7	Interior	12	12	12	12	12	12	12	12	12	12	12	12	12	12	12	12	12	12	12	12	12	12	12	12	12	12	12	12	12	12	12	12	11	12	12	10	12	12	8
			Exposed	12	12	12	12	12	12	12	12	12	12	12	12	12	12	12	12	12	12	12	12	12	12	12	12	12	12	9	12	11	8	12	10	11	12	9	9	11	12	8
		7-20	Interior	12	12	12	12	12	12	12	12	12	12	12	12	12	12	12	12	12	12	12	12	12	12	12	12	12	12	12	12	12	11	12	12	10	12	11	8	12	10	11
			Exposed	12	12	12	12	12	12	12	12	12	12	12	12	12	12	12	12	12	12	12	12	11	12	12	10	12	11	8	12	10	11	12	8	9	10	11	8	9	10	7
		20-27	Interior	15	15	15	15	15	15	15	15	15	15	15	15	15	15	15	15	15	15	15	15	15	15	15	15	15	15	15	15	15	13	15	14	12	15	12	10	15	11	9
			Exposed	15	15	15	15	15	15	15	15	15	15	15	15	15	15	15	15	15	15	15	15	14	15	14	12	15	12	10	15	10	9	15	9	11	14	8	10	12	11	9
		27-45	Interior	20	20	20	20	20	20	20	20	20	20	20	20	20	20	20	20	20	20	20	20	20	19	19	19	18	18	18	17	17	16	16	16	14	16	16	12	15	14	11
			Exposed	20	20	20	20	20	20	20	20	20	20	20	20	20	20	20	20	20	18	20	20	17	19	18	14	17	15	12	15	13	10	13	12	9	11	10	12	10	9	11
	D	0-7	Interior	14	14	14	14	14	14	14	14	14	14	14	14	14	14	14	14	14	14	14	14	14	14	14	14	14	14	12	14	14	10	14	13	9	14	11	12	14	10	11
			Exposed	14	14	14	14	14	14	14	14	14	14	14	14	14	14	13	14	14	12	14	14	11	14	13	9	14	11	12	13	10	10	11	8	9	10	11	8	9	10	7
		7-20	Interior	14	14	14	14	14	14	14	14	14	14	14	14	14	14	14	14	14	14	14	14	14	14	14	12	14	14	11	14	12	9	14	11	12	13	9	11	12	8	9
			Exposed	14	14	14	14	14	14	14	14	14	14	14	13	14	14	11	14	14	10	14	13	10	14	11	12	13	9	10	11	12	9	10	11	8	8	9	7	11	8	6
		20-27	Interior	17	17	17	17	17	17	17	17	17	17	17	17	17	17	17	17	17	17	17	17	17	17	17	15	17	16	13	17	13	11	16	12	10	16	10	8	15	9	11
			Exposed	17	17	17	17	17	17	17	17	17	17	17	15	17	17	14	17	15	13	17	14	12	17	12	10	17	10	8	15	9	11	13	12	10	11	10	8	10	9	7
		27-45	Interior	22	22	22	22	22	22	22	22	22	22	22	22	21	21	21	21	21	21	20	20	20	19	19	18	18	18	15	17	17	13	16	15	12	14	13	10	13	11	9
			Exposed	22	22	22	22	22	22	22	22	20	22	22	18	21	21	17	21	19	15	20	18	14	17	15	12	14	13	10	12	11	9	11	10	12	9	8	10	8	11	9
100	B	0-7	Interior	11	11	11	11	11	11	11	11	11	11	11	11	11	11	11	11	11	11	11	11	11	11	11	11	11	11	11	11	11	11	11	11	11	11	11	11	11	11	11
			Exposed	11	11	11	11	11	11	11	11	11	11	11	11	11	11	11	11	11	11	11	11	11	11	11	11	11	11	11	11	11	11	11	11	10	11	11	9	11	11	12
		7-20	Interior	11	11	11	11	11	11	11	11	11	11	11	11	11	11	11	11	11	11	11	11	11	11	11	11	11	11	11	11	11	11	11	11	11	11	11	11	11	11	11
			Exposed	11	11	11	11	11	11	11	11	11	11	11	11	11	11	11	11	11	11	11	11	11	11	11	11	11	11	11	11	11	10	11	11	9	11	11	12	11	10	11
		20-27	Interior	14	14	14	14	14	14	14	14	14	14	14	14	14	14	14	14	14	14	14	14	14	14	14	14	14	14	14	14	14	14	14	14	14	14	14	14	14	14	13
			Exposed	14	14	14	14	14	14	14	14	14	14	14	14	14	14	14	14	14	14	14	14	14	14	14	14	14	14	14	14	14	13	14	13	11	14	12	10	14	10	9
		27-45	Interior	18	18	18	18	18	18	18	18	18	18	18	18	18	18	18	18	18	18	18	18	18	18	18	18	18	18	18	18	18	18	17	17	17	17	17	17	16	16	16
			Exposed	18	18	18	18	18	18	18	18	18	18	18	18	18	18	18	18	18	18	18	18	18	18	18	18	18	18	18	18	18	15	17	17	13	16	15	12	15	13	10
	C	0-7	Interior	11	11	11	11	11	11	11	11	11	11	11	11	11	11	11	11	11	11	11	11	11	11	11	11	11	11	11	11	11	11	11	11	11	11	11	10	11	11	8
			Exposed	11	11	11	11	11	11	11	11	11	11	11	11	11	11	11	11	11	11	11	11	11	11	11	9	11	11	8	11	10	11	11	9	9	11	12	8
		7-20	Interior	11	11	11	11	11	11	11	11	11	11	11	11	11	11	11	11	11	11	11	11	11	11	11	11	11	11	11	11	11	11	11	11	10	11	11	8	11	10	11
			Exposed	11	11	11	11	11	11	11	11	11	11	11	11	11	11	11	11	11	11	11	11	11	11	11	10	11	11	8	11	10	11	11	8	9	10	11	8	9	10	7
		20-27	Interior	14	14	14	14	14	14	14	14	14	14	14	14	14	14	14	14	14	14	14	14	14	14	14	14	14	14	14	14	14	13	14	14	12	14	12	10	14	11	9
			Exposed	14	14	14	14	14	14	14	14	14	14	14	14	14	14	14	14	14	14	14	14	14	14	14	12	14	12	10	14	10	9	14	9	11	14	8	10	12	11	9
		27-45	Interior	18	18	18	18	18	18	18	18	18	18	18	18	18	18	18	18	18	18	18	18	18	17	17	17	17	17	17	16	16	16	15	15	14	15	15	12	14	14	11
			Exposed	18	18	18	18	18	18	18	18	18	18	18	18	18	18	18	18	18	18	18	18	17	17	17	14	17	15	12	15	13	10	13	12	9	11	10	12	10	9	11
	D	0-7	Interior	12	12	12	12	12	12	12	12	12	12	12	12	12	12	12	12	12	12	12	12	12	12	12	12	12	12	12	12	12	10	12	12	9	12	11	12	12	10	11
			Exposed	12	12	12	12	12	12	12	12	12	12	12	12	12	12	12	12	12	12	12	12	11	12	12	9	12	11	12	12	10	10	11	8	9	10	11	8	9	10	7
		7-20	Interior	12	12	12	12	12	12	12	12	12	12	12	12	12	12	12	12	12	12	12	12	12	12	12	12	12	12	11	12	12	9	12	11	12	12	9	11	12	8	9
			Exposed	12	12	12	12	12	12	12	12	12	12	12	12	12	12	11	12	12	10	12	12	10	12	11	12	12	9	10	11	12	9	10	11	8	8	9	7	11	8	6
		20-27	Interior	15	15	15	15	15	15	15	15	15	15	15	15	15	15	15	15	15	15	15	15	15	15	15	15	15	15	13	15	13	11	15	12	10	15	10	8	14	9	11
			Exposed	15	15	15	15	15	15	15	15	15	15	15	15	15	15	14	15	15	13	15	14	12	15	12	10	15	10	8	15	9	11	13	12	10	11	10	8	10	9	7
		27-45	Interior	20	20	20	20	20	20	20	20	20	20	20	20	20	20	20	19	19	19	19	19	19	18	18	18	17	17	15	16	16	13	15	15	12	14	13	10	13	11	9
			Exposed	20	20	20	20	20	20	20	20	20	20	20	18	20	20	17	19	19	15	19	18	14	17	15	12	14	13	10	12	11	9	11	10	12	9	8	10	8	11	9

* Cells with an astrisks indicates that the L-foot must be oriented in the Y- direction as indicated in the image.

10 Highlighted cell indicate 3-rail system span. Contact Unirac Engineering Services for support.

~~10~~ Highlighted cell with strikethrough indicate 3-rail system span and module clamp allowable capacity exceeds with 3-rails. 4-Rail system required. Contact Unirac Engineering Services for support.

UNIRAC

ASCE 7-22	II	30 ft	Ss = 1.25	23 sq.ft	PORTRAIT	CROSS-SLOPE	NXT	NXT COMBO	Stronghold BUTYL OSB
Design Standard	Risk Category	Roof Height	Seismic	Module Area	Orientation	Rail Direction	Rail Type	Clamp	Attachment

SPAN TABLES

Maximum Allowable Rail Spans for Rooftop Solar Panels Parallel to the Roof Surface (inches)

Ground Snow Load (psf)	Wind Exposure Category	Roof Tilt Angle (deg)	Panel Exposure	Basic Wind Speed (mph)																																						
				90			95			100			105			110			115			120			130			140			150			160			170			180		
				Roof Wind Zone																																						
				1	2	3	1	2	3	1	2	3	1	2	3	1	2	3	1	2	3	1	2	3	1	2	3	1	2	3	1	2	3	1	2	3	1	2	3	1	2	3
0	B	0-7	Interior	29	29	27	29	29	24	29	29	22	29	28	19	29	25	17	29	23	16	29	21	14	24	17	12	21	15	10	18	13	9	15	11	8	13	10	7	12	9	6
			Exposed	29	25	17	29	22	15	28	20	14	25	18	12	22	16	11	20	15	10	19	13	9	16	11	8	13	9	7	11	8	6	10	7	5	9	6	7	8	5	6
		7-20	Interior	29	29	24	29	29	21	29	26	19	29	23	17	29	21	15	27	19	14	24	17	13	20	15	11	17	12	9	15	11	8	13	9	7	11	8	6	10	7	5
			Exposed	29	21	15	26	19	14	23	17	12	21	15	11	19	13	10	17	12	9	15	11	8	13	9	7	11	8	6	9	7	5	8	6	7	7	5	6	6	5	5
		20-27	Interior	29	29	29	29	29	26	29	28	23	29	25	21	29	23	19	29	21	17	29	19	15	28	16	13	23	13	11	20	12	9	17	10	8	15	9	7	14	8	6
			Exposed	29	23	19	29	20	16	29	18	15	28	16	13	26	15	12	23	13	11	21	12	10	18	10	8	15	9	7	13	7	6	11	6	5	10	6	5	9	5	6
		27-45	Interior	29	29	29	29	29	29	29	29	28	29	29	25	29	29	22	29	26	20	26	24	18	22	20	16	19	17	13	16	15	11	14	13	10	12	11	9	11	10	8
			Exposed	29	28	22	28	25	20	25	23	18	23	20	16	21	18	14	19	17	13	17	15	12	14	13	10	12	11	9	10	9	7	9	8	6	8	7	6	7	6	5
	C	0-7	Interior	29	27	18	29	24	16	29	21	15	26	19	13	24	17	12	22	15	11	20	14	10	16	12	8	14	10	7	12	9	6	10	7	5	9	7	7	8	6	6
			Exposed	24	17	12	21	15	10	19	13	9	17	12	8	15	11	8	14	10	7	13	9	6	11	8	5	9	6	7	8	6	6	7	5	5	6	6	4	5	6	4
		7-20	Interior	29	22	16	27	20	14	24	18	13	22	16	12	20	14	10	18	13	9	16	12	9	14	10	7	12	8	6	10	7	5	9	6	5	8	5	6	7	5	5
			Exposed	20	14	10	17	13	9	16	11	8	14	10	7	13	9	7	12	8	6	10	8	5	9	6	5	7	5	6	6	5	5	6	6	5	5	5	4	7	5	3
		20-27	Interior	29	24	20	29	21	17	29	19	16	29	17	14	27	15	13	25	14	11	22	13	10	19	11	9	16	9	7	14	8	6	12	7	6	10	6	5	9	5	7
			Exposed	27	15	13	24	14	11	21	12	10	19	11	9	17	10	8	16	9	7	14	8	7	12	7	6	10	6	5	9	5	6	8	7	6	7	6	5	6	5	4
		27-45	Interior	29	29	24	29	27	21	27	24	19	24	21	17	22	19	15	20	18	14	18	16	13	15	14	11	13	12	9	11	10	8	10	9	7	8	8	6	7	7	5
			Exposed	22	19	15	19	17	13	17	15	12	16	14	11	14	13	10	13	11	9	12	10	8	10	9	7	8	7	6	7	6	5	6	6	7	5	5	6	5	7	5
	D	0-7	Interior	29	22	15	27	19	13	24	17	12	22	16	11	20	14	10	18	13	9	16	12	8	14	10	7	12	8	6	10	7	5	9	6	7	8	5	6	7	5	5
			Exposed	20	14	10	17	12	9	15	11	8	14	10	7	13	9	6	11	8	6	10	7	5	9	6	7	7	5	6	6	7	5	5	6	4	5	5	4	7	5	3
		7-20	Interior	26	18	13	23	16	12	20	14	11	18	13	10	16	12	9	15	11	8	13	10	7	11	8	6	10	7	5	8	6	7	7	5	6	6	7	5	6	6	4
			Exposed	16	12	9	14	10	8	13	9	7	12	8	6	10	8	5	10	7	5	9	6	7	7	5	6	6	7	5	5	6	4	5	5	4	6	4	3	5	4	3
		20-27	Interior	29	20	16	29	18	14	28	16	13	25	14	12	22	13	10	20	12	9	18	11	9	15	9	7	13	8	6	11	6	5	10	6	5	9	5	6	8	7	5
			Exposed	22	13	10	20	11	9	18	10	8	16	9	7	14	8	7	13	7	6	12	7	6	10	6	5	8	5	6	7	6	5	6	6	5	6	5	4	5	4	3
		27-45	Interior	28	25	19	25	22	17	22	20	15	20	18	14	18	16	13	16	15	11	15	13	10	13	11	9	11	10	7	9	8	6	8	7	6	7	6	5	6	5	7
			Exposed	18	16	13	16	14	11	14	13	10	13	11	9	12	10	8	11	9	7	10	9	7	8	7	6	7	6	5	6	5	6	5	7	6	7	6	5	6	5	4
10	B	0-7	Interior	23	23	23	23	23	23	23	23	22	23	23	19	23	23	17	23	23	16	23	21	14	23	17	12	21	15	10	18	13	9	15	11	8	13	10	7	12	9	6
			Exposed	23	23	17	23	22	15	23	20	14	23	18	12	22	16	11	20	15	10	19	13	9	16	11	8	13	9	7	11	8	6	10	7	5	9	6	7	8	5	6
		7-20	Interior	23	23	23	23	23	21	23	23	19	23	23	17	23	21	15	23	19	14	23	17	13	20	15	11	17	12	9	15	11	8	13	9	7	11	8	6	10	7	5
			Exposed	23	21	15	23	19	14	23	17	12	21	15	11	19	13	10	17	12	9	15	11	8	13	9	7	11	8	6	9	7	5	8	6	7	7	5	6	6	5	5
		20-27	Interior	27	27	27	27	27	26	27	27	23	27	25	21	27	23	19	27	21	17	27	19	15	27	16	13	23	13	11	20	12	9	17	10	8	15	9	7	14	8	6
			Exposed	27	23	19	27	20	16	27	18	15	27	16	13	26	15	12	23	13	11	21	12	10	18	10	8	15	9	7	13	7	6	11	6	5	10	6	5	9	5	6
		27-45	Interior	29	29	29	29	29	29	29	29	28	29	29	25	29	29	22	29	26	20	26	24	18	22	20	16	19	17	13	16	15	11	14	13	10	12	11	9	11	10	8
			Exposed	29	28	22	28	25	20	25	23	18	23	20	16	21	18	14	19	17	13	17	15	12	14	13	10	12	11	9	10	9	7	9	8	6	8	7	6	7	6	5
	C	0-7	Interior	23	23	18	23	23	16	23	21	15	23	19	13	23	17	12	22	15	11	20	14	10	16	12	8	14	10	7	12	9	6	10	7	5	9	7	7	8	6	6
			Exposed	23	17	12	21	15	10	19	13	9	17	12	8	15	11	8	14	10	7	13	9	6	11	8	5	9	6	7	8	6	6	7	5	5	6	6	4	5	6	4
		7-20	Interior	23	22	16	23	20	14	23	18	13	22	16	12	20	14	10	18	13	9	16	12	9	14	10	7	12	8	6	10	7	5	9	6	5	8	5	6	7	5	5
			Exposed	20	14	10	17	13	9	16	11	8	14	10	7	13	9	7	12	8	6	10	8	5	9	6	5	7	5	6	6	5	5	6	6	5	5	5	4	7	5	3
		20-27	Interior	27	24	20	27	21	17	27	19	16	27	17	14	27	15	13	25	14	11	22	13	10	19	11	9	16	9	7	14	8	6	12	7	6	10	6	5	9	5	7
			Exposed	27	15	13	24	14	11	21	12	10	19	11	9	17	10	8	16	9	7	14	8	7	12	7	6	10	6	5	9	5	6	8	7	6	7	6	5	6	5	4
		27-45	Interior	29	29	24	29	27	21	27	24	19	24	21	17	22	19	15	20	18	14	18	16	13	15	14	11	13	12	9	11	10	8	10	9	7	8	8	6	7	7	5
			Exposed	22	19	15	19	17	13	17	15	12	16	14	11	14	13	10	13	11	9	12	10	8	10	9	7	8	7	6	7	6	5	6	6	7	5	5	6	5	7	5
	D	0-7	Interior	29	22	15	27	19	13	24	17	12	22	16	11	20	14	10	18	13	9	16	12	8	14	10	7	12	8	6	10	7	5	9	6	7	8	5	6	7	5	5
			Exposed	20	14	10	17	12	9	15	11	8	14	10	7	13	9	6	11	8	6	10	7	5	9	6	7	7	5	6	6	7	5	5	6	4	5	5	4	7	5	3
		7-20	Interior	26	18	13	23	16	12	20	14	11	18	13	10	16	12	9	15	11	8	13	10	7	11	8	6	10	7	5	8	6	7	7	5	6	6	7	5	6	6	4
			Exposed	16	12	9	14	10	8	13	9	7	12	8	6	10	8	5	10	7	5	9	6	7	7	5	6	6	7	5	5	6	4	5	5	4	6	4	3	5	4	3
		20-27	Interior	29	20	16	29	18	14	28	16	13	25	14	12	22	13	10	20	12	9	18	11	9	15	9	7	13	8	6	11	6	5	10	6	5	9	5	6	8	7	5
			Exposed	22	13	10	20	11	9	18	10	8	16	9	7	14	8	7	13	7	6	12	7	6	10	6	5	8	5	6	7	6	5	6	6	5	6	5	4	5	4	3
		27-45	Interior	28	25	19	25	22	17	22	20	15	20	18	14	18	16	13	16	15	11	15	13	10	13	11	9	11	10	7	9	8	6	8	7	6	7	6	5	6	5	7
			Exposed	18	16	13	16	14	11	14	13	10	13	11	9	12	10	8	11	9	7	10	9	7	8	7	6	7	6	5	6	5	6	5	7	6	7	6	5	6	5	4
20	B	0-7	Interior	17	17	17	17	17	17	17	17	17	17	17	17	17	17	17	17	17	16	17	17	14	17	17	12	17	15	10	17	13	9	15	11	8	13	10	7	12	9	6
			Exposed	17	17	17	17	17	15	17	17	14	17	17	12	17	16	11	17	15	10	17	13	9	16	11	8	13	9	7	11	8	6	10	7	5	9	6	7	8	5	6
		7-20	Interior	17	17	17	17	17	17	17	17	17	17	17	17	17	17	15	17	17	14	17	17	13	17	15	11	17	12	9	15	11	8	13	9	7	11	8	6	10	7	5
			Exposed	17	17	15	17	17	14	17	17	12	17	15	11	17	13	10	17	12	9	15	11	8	13	9	7	11	8	6	9	7	5	8	6	7	7	5	6	6	5	5
		20-27	Interior	21	21	21	21	21	21	21	21	21	21	21	21	21	21	19	21	21	17	21	19	15	21	16	13	21	13	11	20	12	9	17	10	8	15	9	7	14	8	6
			Exposed	21	21	19	21	20	16	21	18	15	21	16	13	21	15	12	21	13	11	21	12	10	18	10	8	15	9	7	13	7	6	11	6	5	10	6	5	9	5	6
		27-45	Interior	23	23	23	23	23	23	23	23	23	23	23	23	23	23	22	23	23	20	23	23	18	22	20	16	19	17	13	16	15	11	14	13	10	12	11	9	11	10	8
			Exposed	23	23	22	23	23	20	23	23	18	23	20	16	21	18	14	19	17	13	17	15	12	14	13	10	12	11	9	10	9	7	9	8	6	8	7	6	7	6	5
	C	0-7	Interior	17	17	17	17	17	16	17	17	15	17	17	13	17	17	12	17	15	11	17	14	10	16	12	8	14	10	7	12	9	6	10	7	5	9	7	7	8	6	6
			Exposed	17	17	12	17	15	10	17	13	9	17	12	8	15	11	8	14	10	7	13	9	6	11	8	5	9	6	7	8	6	6	7	5	5	6	6	4	5	6	4
		7-20	Interior	17	17	16	17	17	14	17	17	13	17	16	12	17	14	10	17	13	9	16	12	9	14	10	7	12	8	6	10	7	5	9	6	5	8	5	6	7	5	5
			Exposed	17	14	10	17	13	9	16	11	8	14	10	7	13	9	7	12	8	6	10	8	5	9	6	5	7	5	6	6	5	5	6	6	5	5	5	4	7	5	3
		20-27	Interior	21	21	20	21	21	17	21	19	16	21	17	14	21	15	13	21	14	11	21	13	10	19	11	9	16	9	7	14	8	6	12	7	6	10	6	5	9	5	7
			Exposed	21	15	13	21	14	11	21	12	10	19	11	9	17	10	8	16	9	7	14	8	7	12	7	6	10	6	5	9	5	6	8	7	6	7	6	5	6	5	4
		27-45	Interior	23	23	23	23	23	21	23	23	19	23	21	17	22	19	15	20	18	14	18	16	13	15	14	11	13	12	9	11	10	8	10	9	7	8	8	6	7	7	5
			Exposed	22	19	15	19	17	13	17	15	12	16	14	11	14	13	10	13	11	9	12	10	8	10	9	7	8	7	6	7	6	5	6	6	7	5	5	6	5	7	5
	D	0-7	Interior	17	17	15	17	17	13	17	17	12	17	16	11	17	14	10	17	13	9	16	12	8	14	10	7	12	8	6	10	7	5	9	6	7	8	5	6	7	5	5
			Exposed	17	14	10	17	12	9	15	11	8	14	10	7	13	9	6	11	8	6	10	7	5	9	6	7	7	5	6	6	7	5	5	6	4	5	5	4	7	5	3
		7-20	Interior	17	17	13	17	16	12	17	14	11	17	13	10	16	12	9	15	11	8	13	10	7	11	8	6	10	7	5	8	6	7	7	5	6	6	7	5	6	6	4
			Exposed	16	12	9	14	10	8	13	9	7	12	8	6	10	8	5	10	7	5	9	6	7	7	5	6	6	7	5	5	6	4	5	5	4	6	4	3	5	4	3
		20-27	Interior	22	20	16	22	18	14	22	16	13	22	14	12	22	13	10	20	12	9	18	11	9	15	9	7	13	8	6	11	6	5	10	6	5	9	5	6	8	7	5
			Exposed	22	13	10	20	11	9	18	10	8	16	9	7	14	8	7	13	7	6	12	7	6	10	6	5	8	5	6	7	6	5	6	6	5	6	5	4	5	4	3
		27-45	Interior	24	24	19	24	22	17	22	20	15	20	18	14	18	16	13	16	15	11	15	13	10	13	11	9	11	10	7	9	8	6	8	7	6	7	6	5	6	5	7
			Exposed	18	16	13	16	14	11	14	13	10	13	11	9	12	10	8	11	9	7	10	9	7	8	7	6	7	6	5	6	5	6	5	7	6	7	6	5	6	5	4

* Cells with an astrisks indicates that the L-foot must be oriented in the Y- direction as indicated in the image.

10 Highlighted cell indicate 3-rail system span. Contact Unirac Engineering Services for support.

~~10~~ Highlighted cell with strikethrough indicate 3-rail system span and module clamp allowable capacity exceeds with 3-rails. 4-Rail system required. Contact Unirac Engineering Services for support.

UNIRAC

ASCE 7-22	II	30 ft	Ss = 1.25	23 sq.ft	PORTRAIT	CROSS-SLOPE	NXT	NXT COMBO	Stronghold BUTYL OSB
Design Standard	Risk Category	Roof Height	Seismic	Module Area	Orientation	Rail Direction	Rail Type	Clamp	Attachment

SPAN TABLES

Maximum Allowable Rail Spans for Rooftop Solar Panels Parallel to the Roof Surface (inches)

Ground Snow Load (psf)	Wind Exposure Category	Roof Tilt Angle (deg)	Panel Exposure	Basic Wind Speed (mph)																																						
				90			95			100			105			110			115			120			130			140			150			160			170			180		
				Roof Wind Zone																																						
				1	2	3	1	2	3	1	2	3	1	2	3	1	2	3	1	2	3	1	2	3	1	2	3	1	2	3	1	2	3	1	2	3	1	2	3	1	2	3
30	B	0-7	Interior	13	13	13	13	13	13	13	13	13	13	13	13	13	13	13	13	13	13	13	13	13	13	13	12	13	13	10	13	13	9	13	11	8	13	10	7	12	9	6
			Exposed	13	13	13	13	13	13	13	13	13	13	13	12	13	13	11	13	13	10	13	13	9	13	11	8	13	9	7	11	8	6	10	7	5	9	6	7	8	5	6
		7-20	Interior	14	14	14	14	14	14	14	14	14	14	14	14	14	14	14	14	14	14	14	14	13	14	14	11	14	12	9	14	11	8	13	9	7	11	8	6	10	7	5
			Exposed	14	14	14	14	14	14	14	14	12	14	14	11	14	13	10	14	12	9	14	11	8	13	9	7	11	8	6	9	7	5	8	6	7	7	5	6	6	5	5
		20-27	Interior	17	17	17	17	17	17	17	17	17	17	17	17	17	17	17	17	17	17	17	17	15	17	16	13	17	13	11	17	12	9	17	10	8	15	9	7	14	8	6
			Exposed	17	17	17	17	17	16	17	17	15	17	16	13	17	15	12	17	13	11	17	12	10	17	10	8	15	9	7	13	7	6	11	6	5	10	6	5	9	5	6
		27-45	Interior	20	20	20	20	20	20	20	20	20	20	20	20	20	20	20	20	20	20	20	20	18	20	20	16	19	17	13	16	15	11	14	13	10	12	11	9	11	10	8
			Exposed	20	20	20	20	20	20	20	20	18	20	20	16	20	18	14	19	17	13	17	15	12	14	13	10	12	11	9	10	9	7	9	8	6	8	7	6	7	6	5
	C	0-7	Interior	13	13	13	13	13	13	13	13	13	13	13	13	13	13	12	13	13	11	13	13	10	13	12	8	13	10	7	12	9	6	10	7	5	9	7	7	8	6	6
			Exposed	13	13	12	13	13	10	13	13	9	13	12	8	13	11	8	13	10	7	13	9	6	11	8	5	9	6	7	8	6	6	7	5	5	6	6	4	5	6	4
		7-20	Interior	14	14	14	14	14	14	14	14	13	14	14	12	14	14	10	14	13	9	14	12	9	14	10	7	12	8	6	10	7	5	9	6	5	8	5	6	7	5	5
			Exposed	14	14	10	14	13	9	14	11	8	14	10	7	13	9	7	12	8	6	10	8	5	9	6	5	7	5	6	6	5	5	6	6	5	5	5	4	7	5	3
		20-27	Interior	17	17	17	17	17	17	17	17	16	17	17	14	17	15	13	17	14	11	17	13	10	17	11	9	16	9	7	14	8	6	12	7	6	10	6	5	9	5	7
			Exposed	17	15	13	17	14	11	17	12	10	17	11	9	17	10	8	16	9	7	14	8	7	12	7	6	10	6	5	9	5	6	8	7	6	7	6	5	6	5	4
		27-45	Interior	20	20	20	20	20	20	20	20	19	20	20	17	20	19	15	19	18	14	18	16	13	15	14	11	13	12	9	11	10	8	10	9	7	8	8	6	7	7	5
			Exposed	20	19	15	19	17	13	17	15	12	16	14	11	14	13	10	13	11	9	12	10	8	10	9	7	8	7	6	7	6	5	6	6	7	5	5	6	5	7	5
	D	0-7	Interior	13	13	13	13	13	13	13	13	12	13	13	11	13	13	10	13	13	9	13	12	8	13	10	7	12	8	6	10	7	5	9	6	7	8	5	6	7	5	5
			Exposed	13	13	10	13	12	9	13	11	8	13	10	7	13	9	6	11	8	6	10	7	5	9	6	7	7	5	6	6	7	5	5	6	4	5	5	4	7	5	3
		7-20	Interior	14	14	13	14	14	12	14	14	11	14	13	10	14	12	9	14	11	8	13	10	7	11	8	6	10	7	5	8	6	7	7	5	6	6	7	5	6	6	4
			Exposed	14	12	9	14	10	8	13	9	7	12	8	6	10	8	5	10	7	5	9	6	7	7	5	6	6	7	5	5	6	4	5	5	4	6	4	3	5	4	3
		20-27	Interior	18	18	16	18	18	14	18	16	13	18	14	12	18	13	10	18	12	9	18	11	9	15	9	7	13	8	6	11	6	5	10	6	5	9	5	6	8	7	5
			Exposed	18	13	10	18	11	9	18	10	8	16	9	7	14	8	7	13	7	6	12	7	6	10	6	5	8	5	6	7	6	5	6	6	5	6	5	4	5	4	3
		27-45	Interior	21	21	19	21	21	17	21	20	15	20	18	14	18	16	13	16	15	11	15	13	10	13	11	9	11	10	7	9	8	6	8	7	6	7	6	5	6	5	7
			Exposed	18	16	13	16	14	11	14	13	10	13	11	9	12	10	8	11	9	7	10	9	7	8	7	6	7	6	5	6	5	6	5	7	6	7	6	5	6	5	4
40	B	0-7	Interior	12	12	12	12	12	12	12	12	12	12	12	12	12	12	12	12	12	12	12	12	12	12	12	10	12	12	9	12	11	8	12	10	7	12	9	6	9	6	6
			Exposed	12	12	12	12	12	12	12	12	12	12	12	12	12	12	11	12	12	10	12	12	9	12	11	8	12	9	7	11	8	6	10	7	5	9	6	7	8	5	6
		7-20	Interior	13	13	13	13	13	13	13	13	13	13	13	13	13	13	13	13	13	13	13	13	13	13	13	11	13	12	9	13	11	8	13	9	7	11	8	6	10	7	5
			Exposed	13	13	13	13	13	13	13	13	12	13	13	11	13	13	10	13	12	9	13	11	8	13	9	7	11	8	6	9	7	5	8	6	7	7	5	6	6	5	5
		20-27	Interior	15	15	15	15	15	15	15	15	15	15	15	15	15	15	15	15	15	15	15	15	15	15	15	13	15	13	11	15	12	9	15	10	8	14	9	7	14	8	6
			Exposed	15	15	15	15	15	15	15	15	15	15	15	13	15	15	12	15	13	11	15	12	10	15	10	8	15	9	7	13	7	6	11	6	5	10	6	5	9	5	6
		27-45	Interior	17	17	17	17	17	17	17	17	17	17	17	17	17	17	17	17	17	17	17	17	17	17	17	16	16	16	13	15	15	11	14	13	10	12	11	9	11	10	8
			Exposed	17	17	17	17	17	17	17	17	17	17	17	16	17	17	14	17	17	13	17	15	12	14	13	10	12	11	9	10	9	7	9	8	6	8	7	6	7	6	5
	C	0-7	Interior	12	12	12	12	12	12	12	12	12	12	12	12	12	12	12	12	12	11	12	12	10	12	12	8	12	10	7	12	9	6	10	7	5	9	7	7	8	6	6
			Exposed	12	12	12	12	12	10	12	12	9	12	12	8	12	11	8	12	10	7	12	9	6	11	8	5	9	6	7	8	6	6	7	5	5	6	6	4	5	6	4
		7-20	Interior	13	13	13	13	13	13	13	13	13	13	13	12	13	13	10	13	13	9	13	12	9	13	10	7	12	8	6	10	7	5	9	6	5	8	5	6	7	5	5
			Exposed	13	13	10	13	13	9	13	11	8	13	10	7	13	9	7	12	8	6	10	8	5	9	6	5	7	5	6	6	5	5	6	6	5	5	5	4	7	5	3
		20-27	Interior	15	15	15	15	15	15	15	15	15	15	15	14	15	15	13	15	14	11	15	13	10	15	11	9	14	9	7	14	8	6	12	7	6	10	6	5	9	5	7
			Exposed	15	15	13	15	14	11	15	12	10	15	11	9	15	10	8	15	9	7	14	8	7	12	7	6	10	6	5	9	5	6	8	7	6	7	6	5	6	5	4
		27-45	Interior	17	17	17	17	17	17	17	17	17	17	17	17	17	17	15	17	17	14	16	16	13	15	14	11	13	12	9	11	10	8	10	9	7	8	8	6	7	7	5
			Exposed	17	17	15	17	17	13	17	15	12	16	14	11	14	13	10	13	11	9	12	10	8	10	9	7	8	7	6	7	6	5	6	6	7	5	5	6	5	7	5
	D	0-7	Interior	13	13	13	13	13	13	13	13	12	13	13	11	13	13	10	13	13	9	13	12	8	13	10	7	12	8	6	10	7	5	9	6	7	8	5	6	7	5	5
			Exposed	13	13	10	13	12	9	13	11	8	13	10	7	13	9	6	11	8	6	10	7	5	9	6	7	7	5	6	6	7	5	5	6	4	5	5	4	7	5	3
		7-20	Interior	13	13	13	13	13	12	13	13	11	13	13	10	13	12	9	13	11	8	13	10	7	11	8	6	10	7	5	8	6	7	7	5	6	6	7	5	6	6	4
			Exposed	13	12	9	13	10	8	13	9	7	12	8	6	10	8	5	10	7	5	9	6	7	7	5	6	6	7	5	5	6	4	5	5	4	6	4	3	5	4	3
		20-27	Interior	15	15	15	15	15	14	15	15	13	15	14	12	15	13	10	15	12	9	15	11	9	15	9	7	13	8	6	11	6	5	10	6	5	9	5	6	8	7	5
			Exposed	15	13	10	15	11	9	15	10	8	15	9	7	14	8	7	13	7	6	12	7	6	10	6	5	8	5	6	7	6	5	6	6	5	6	5	4	5	4	3
		27-45	Interior	18	18	18	18	18	17	18	18	15	18	18	14	17	16	13	16	15	11	15	13	10	13	11	9	11	10	7	9	8	6	8	7	6	7	6	5	6	5	7
			Exposed	18	16	13	16	14	11	14	13	10	13	11	9	12	10	8	11	9	7	10	9	7	8	7	6	7	6	5	6	5	6	5	7	6	7	6	5	6	5	4
50	B	0-7	Interior	11	11	11	11	11	11	11	11	11	11	11	11	11	11	11	11	11	11	11	11	11	11	11	10	11	11	9	11	11	8	11	10	7	11	9	6	11	9	6
			Exposed	11	11	11	11	11	11	11	11	11	11	11	11	11	11	11	11	11	10	11	11	9	11	11	8	11	9	7	11	8	6	10	7	5	9	6	7	8	5	6
		7-20	Interior	11	11	11	11	11	11	11	11	11	11	11	11	11	11	11	11	11	11	11	11	11	11	11	9	11	11	8	11	9	7	11	8	6	10	7	5	10	7	5
			Exposed	11	11	11	11	11	11	11	11	11	11	11	11	11	11	10	11	11	9	11	11	8	11	9	7	11	8	6	9	7	5	8	6	7	7	5	6	6	5	5
		20-27	Interior	13	13	13	13	13	13	13	13	13	13	13	13	13	13	13	13	13	13	13	13	13	13	13	11	13	13	11	13	12	9	13	10	8	12	9	7	12	8	6
			Exposed	13	13	13	13	13	13	13	13	13	13	13	13	13	13	12	13	13	11	13	12	10	13	10	8	13	9	7	13	7	6	11	6	5	10	6	5	9	5	6
		27-45	Interior	15	15	15	15	15	15	15	15	15	15	15	15	15	15	15	15	15	15	15	15	15	15	15	15	14	14	13	14	14	11	13	13	10	12	11	9	11	10	8
			Exposed	15	15	15	15	15	15	15	15	15	15	15	15	15	15	14	15	15	13	15	15	12	14	13	10	12	11	9	10	9	7	9	8	6	8	7	6	7	6	5
	C	0-7	Interior	11	11	11	11	11	11	11	11	11	11	11	11	11	11	11	11	11	11	11	11	10	11	11	8	11	10	7	11	9	6	10	7	5	9	7	7	8	6	6
			Exposed	11	11	11	11	11	10	11	11	9	11	11	8	11	11	8	11	10	7	11	9	6	11	8	5	9	6	7	8	6	6	7	5	5	6	6	4	5	6	4
		7-20	Interior	11	11	11	11	11	11	11	11	11	11	11	11	11	11	10	11	11	9	11	11	9	11	10	7	11	8	6	10	7	5	9	6	5	8	5	6	7	5	5
			Exposed	11	11	10	11	11	9	11	11	8	11	10	7	11	9	7	11	8	6	10	8	5	9	6	5	7	5	6	6	5	5	6	6	5	5	5	4	7	5	3
		20-27	Interior	13	13	13	13	13	13	13	13	13	13	13	13	13	13	13	13	13	11	13	13	10	13	11	9	12	9	7	12	8	6	11	7	6	10	6	5	9	5	7
			Exposed	13	13	13	13	13	11	13	12	10	13	11	9	13	10	8	13	9	7	13	8	7	12	7	6	10	6	5	9	5	6	8	7	6	7	6	5	6	5	4
		27-45	Interior	15	15	15	15	15	15	15	15	15	15	15	15	15	15	15	15	14	14	14	13	13	13	13	11	13	12	9	11	10	8	10	9	7	8	8	6	7	7	5
			Exposed	15	15	15	15	15	13	15	15	12	15	14	11	14	13	10	13	11	9	12	10	8	10	9	7	8	7	6	7	6	5	6	6	7	5	5	6	5	7	5
	D	0-7	Interior	12	12	12	12	12	12	12	12	12	12	12	11	12	12	10	12	12	9	12	12	8	12	10	7	12	8	6	10	7	5	9	6	7	8	5	6	7	5	5
			Exposed	12	12	10	12	12	9	12	11	8	12	10	7	12	9	6	11	8	6	10	7	5	9	6	7	7	5	6	6	7	5	5	6	4	5	5	4	7	5	3
		7-20	Interior	12	12	12	12	12	12	12	12	11	12	12	10	12	12	9	12	11	8	12	10	7	11	8	6	10	7	5	8	6	7	7	5	6	6	7	5	6	6	4
			Exposed	12	12	9	12	10	8	12	9	7	12	8	6	10	8	5	10	7	5	9	6	7	7	5	6	6	7	5	5	6	4	5	5	4	6	4	3	5	4	3
		20-27	Interior	14	14	14	14	14	14	14	14	13	14	14	12	14	13	10	14	12	9	14	11	9	13	9	7	13	8	6	11	6	5	10	6	5	9	5	6	8	7	5
			Exposed	14	13	10	14	11	9	14	10	8	14	9	7	14	8	7	13	7	6	12	7	6	10	6	5	8	5	6	7	6	5	6	6	5	6	5	4	5	4	3
		27-45	Interior	16	16	16	16	16	16	16	16	15	16	16	14	15	15	13	14	14	11	14	13	10	13	11	9	11	10	7	9	8	6	8	7	6	7	6	5	6	5	7
			Exposed	16	16	13	16	14	11	14	13	10	13	11	9	12	10	8	11	9	7	10	9	7	8	7	6	7	6	5	6	5	6	5	7	6	7	6	5	6	5	4

* Cells with an astrisks indicates that the L-foot must be oriented in the Y- direction as indicated in the image.

10 Highlighted cell indicate 3-rail system span. Contact Unirac Engineering Services for support.

~~10~~ Highlighted cell with strikethrough indicate 3-rail system span and module clamp allowable capacity exceeds with 3-rails. 4-Rail system required. Contact Unirac Engineering Services for support.

UNIRAC

ASCE 7-22	II	30 ft	Ss = 1.25	23 sq.ft	PORTRAIT	CROSS-SLOPE	NXT	NXT COMBO	Stronghold BUTYL OSB
Design Standard	Risk Category	Roof Height	Seismic	Module Area	Orientation	Rail Direction	Rail Type	Clamp	Attachment

SPAN TABLES

Maximum Allowable Rail Spans for Rooftop Solar Panels Parallel to the Roof Surface (inches)

Ground Snow Load (psf)	Wind Exposure Category	Roof Tilt Angle (deg)	Panel Exposure	Basic Wind Speed (mph)																																						
				90			95			100			105			110			115			120			130			140			150			160			170			180		
				Roof Wind Zone																																						
				1	2	3	1	2	3	1	2	3	1	2	3	1	2	3	1	2	3	1	2	3	1	2	3	1	2	3	1	2	3	1	2	3	1	2	3	1	2	3
60	B	0-7	Interior	9	9	9	9	9	9	9	9	9	9	9	9	9	9	9	9	9	9	9	9	9	9	9	9	9	9	9	9	9	9	9	9	8	9	9	7	9	9	6
			Exposed	9	9	9	9	9	9	9	9	9	9	9	9	9	9	9	9	9	9	9	9	9	9	9	8	9	9	7	9	8	6	9	7	5	9	6	7	8	5	6
		7-20	Interior	9	9	9	9	9	9	9	9	9	9	9	9	9	9	9	9	9	9	9	9	9	9	9	9	9	9	9	9	9	8	9	9	7	9	8	6	9	7	5
			Exposed	9	9	9	9	9	9	9	9	9	9	9	9	9	9	9	9	9	9	9	9	8	9	9	7	9	8	6	9	7	5	8	6	7	7	5	6	6	5	5
		20-27	Interior	11	11	11	11	11	11	11	11	11	11	11	11	11	11	11	11	11	11	11	11	11	11	11	11	11	11	11	11	11	9	11	10	8	11	9	7	11	8	6
			Exposed	11	11	11	11	11	11	11	11	11	11	11	11	11	11	11	11	11	11	11	11	10	11	10	8	11	9	7	11	7	6	11	6	5	10	6	5	9	5	6
		27-45	Interior	13	13	13	13	13	13	13	13	13	13	13	13	13	13	13	13	13	13	13	13	13	13	13	13	13	13	13	12	12	11	12	12	10	11	11	9	11	10	8
			Exposed	13	13	13	13	13	13	13	13	13	13	13	13	13	13	13	13	13	13	13	13	12	13	13	10	12	11	9	10	9	7	9	8	6	8	7	6	7	6	5
	C	0-7	Interior	9	9	9	9	9	9	9	9	9	9	9	9	9	9	9	9	9	9	9	9	9	9	9	8	9	9	7	9	9	6	9	7	5	9	7	7	8	6	6
			Exposed	9	9	9	9	9	9	9	9	9	9	9	8	9	9	8	9	9	7	9	9	6	9	8	5	9	6	7	8	6	6	7	5	5	6	6	4	5	6	4
		7-20	Interior	9	9	9	9	9	9	9	9	9	9	9	9	9	9	9	9	9	9	9	9	9	9	9	7	9	8	6	9	7	5	9	6	5	8	5	6	7	5	5
			Exposed	9	9	9	9	9	9	9	9	8	9	9	7	9	9	7	9	8	6	9	8	5	9	6	5	7	5	6	6	5	5	6	6	5	5	5	4	7	5	3
		20-27	Interior	11	11	11	11	11	11	11	11	11	11	11	11	11	11	11	11	11	11	11	11	10	11	11	9	11	9	7	11	8	6	10	7	6	10	6	5	9	5	7
			Exposed	11	11	11	11	11	11	11	11	10	11	11	9	11	10	8	11	9	7	11	8	7	11	7	6	10	6	5	9	5	6	8	7	6	7	6	5	6	5	4
		27-45	Interior	13	13	13	13	13	13	13	13	13	13	13	11	13	13	10	13	11	9	12	10	8	10	9	7	8	7	6	7	6	5	6	6	7	5	5	6	5	7	5
			Exposed	13	13	13	13	13	13	13	13	12	13	13	11	13	13	10	13	11	9	12	10	8	10	9	7	8	7	6	7	6	5	6	6	7	5	5	6	5	7	5
	D	0-7	Interior	10	10	10	10	10	10	10	10	10	10	10	10	10	10	10	10	10	9	10	10	8	10	10	7	10	8	6	10	7	5	9	6	7	8	5	6	7	5	5
			Exposed	10	10	10	10	10	9	10	10	8	10	10	7	10	9	6	10	8	6	10	7	5	9	6	7	7	5	6	6	7	5	5	6	4	5	5	4	7	5	3
		7-20	Interior	10	10	10	10	10	10	10	10	10	10	10	10	10	10	9	10	10	8	10	10	7	10	8	6	10	7	5	8	6	7	7	5	6	6	7	5	6	6	4
			Exposed	10	10	9	10	10	8	10	9	7	10	8	6	10	8	5	10	7	5	9	6	7	7	5	6	6	7	5	5	6	4	5	5	4	6	4	3	5	4	3
		20-27	Interior	12	12	12	12	12	12	12	12	12	12	12	12	12	12	10	12	12	9	12	11	9	12	9	7	11	8	6	11	6	5	10	6	5	9	5	6	8	7	5
			Exposed	12	12	10	12	11	9	12	10	8	12	9	7	12	8	7	12	7	6	12	7	6	10	6	5	8	5	6	7	6	5	6	6	5	6	5	4	5	4	3
		27-45	Interior	14	14	14	14	14	14	14	14	14	14	14	14	13	13	13	13	13	11	13	13	10	12	11	9	11	10	7	9	8	6	8	7	6	7	6	5	6	5	7
			Exposed	14	14	13	14	14	11	14	13	10	13	11	9	12	10	8	11	9	7	10	9	7	8	7	6	7	6	5	6	5	6	5	7	6	7	6	5	6	5	4
70	B	0-7	Interior	8	8	8	8	8	8	8	8	8	8	8	8	8	8	8	8	8	8	8	8	8	8	8	8	8	8	8	8	8	8	8	8	8	8	8	7	8	8	6
			Exposed	8	8	8	8	8	8	8	8	8	8	8	8	8	8	8	8	8	8	8	8	8	8	8	8	8	8	7	8	8	6	8	7	5	8	6	7	8	5	6
		7-20	Interior	8	8	8	8	8	8	8	8	8	8	8	8	8	8	8	8	8	8	8	8	8	8	8	8	8	8	8	8	8	8	8	8	7	8	8	6	8	7	5
			Exposed	8	8	8	8	8	8	8	8	8	8	8	8	8	8	8	8	8	8	8	8	8	8	8	7	8	8	6	8	7	5	8	6	7	7	5	6	6	5	5
		20-27	Interior	10	10	10	10	10	10	10	10	10	10	10	10	10	10	10	10	10	10	10	10	10	10	10	10	10	10	10	10	10	9	10	10	8	10	9	7	9	7	6
			Exposed	10	10	10	10	10	10	10	10	10	10	10	10	10	10	10	10	10	10	10	10	10	10	10	8	10	9	7	10	7	6	10	6	5	10	6	5	9	5	6
		27-45	Interior	12	12	12	12	12	12	12	12	12	12	12	12	12	12	12	12	12	12	12	12	12	12	12	12	12	12	12	11	11	11	11	11	10	10	10	9	10	10	8
			Exposed	12	12	12	12	12	12	12	12	12	12	12	12	12	12	12	12	12	12	12	12	12	12	12	10	12	11	9	10	9	7	9	8	6	8	7	6	7	6	5
	C	0-7	Interior	8	8	8	8	8	8	8	8	8	8	8	8	8	8	8	8	8	8	8	8	8	8	8	8	8	8	7	8	8	6	8	7	5	8	7	7	8	6	6
			Exposed	8	8	8	8	8	8	8	8	8	8	8	8	8	8	8	8	8	7	8	8	6	8	8	5	8	6	7	8	6	6	7	5	5	6	6	4	5	6	4
		7-20	Interior	8	8	8	8	8	8	8	8	8	8	8	8	8	8	8	8	8	8	8	8	8	8	8	7	8	8	6	8	7	5	8	6	5	8	5	6	7	5	5
			Exposed	8	8	8	8	8	8	8	8	8	8	8	7	8	8	7	8	8	6	8	8	5	8	6	5	7	5	6	6	5	5	6	6	5	5	5	4	7	5	3
		20-27	Interior	10	10	10	10	10	10	10	10	10	10	10	10	10	10	10	10	10	10	10	10	10	10	10	9	10	9	7	10	8	6	9	7	6	9	6	5	9	5	7
			Exposed	10	10	10	10	10	10	10	10	10	10	10	9	10	10	8	10	9	7	10	8	7	10	7	6	10	6	5	9	5	6	8	7	6	7	6	5	6	5	4
		27-45	Interior	12	12	12	12	12	12	12	12	12	12	12	12	12	12	12	12	12	12	12	12	12	12	12	12	12	12	12	11	11	11	10	10	9	10	9	7	9	8	6
			Exposed	12	12	12	12	12	12	12	12	12	12	12	12	12	12	12	12	12	12	12	12	12	12	12	10	12	11	9	10	9	7	9	8	6	8	7	6	7	6	5
	D	0-7	Interior	8	8	8	8	8	8	8	8	8	8	8	8	8	8	8	8	8	8	8	8	8	8	8	8	8	8	8	8	7	5	8	6	7	8	5	6	7	5	5
			Exposed	8	8	8	8	8	8	8	8	8	8	8	7	8	8	6	8	8	6	8	7	5	8	6	7	7	5	6	6	7	5	5	6	4	5	5	4	7	5	3
		7-20	Interior	9	9	9	9	9	9	9	9	9	9	9	9	9	9	9	9	9	8	9	9	7	9	8	6	9	7	5	8	6	7	7	5	6	6	7	5	6	6	4
			Exposed	9	9	9	9	9	8	9	9	7	9	8	6	9	8	5	9	7	5	9	6	7	7	5	6	6	7	5	5	6	4	5	5	4	6	4	3	5	4	3
		20-27	Interior	11	11	11	11	11	11	11	11	11	11	11	11	11	11	10	11	11	9	11	11	9	11	9	7	10	8	6	10	6	5	9	6	5	9	5	6	8	7	5
			Exposed	11	11	10	11	11	9	11	10	8	11	9	7	11	8	7	11	7	6	11	7	6	10	6	5	8	5	6	7	6	5	6	6	5	6	5	4	5	4	3
		27-45	Interior	13	13	13	13	13	13	13	13	13	13	13	13	12	12	12	12	12	11	12	12	10	11	11	9	10	10	7	9	8	6	8	7	6	7	6	5	6	5	7
			Exposed	13	13	13	13	13	11	13	13	10	13	11	9	12	10	8	11	9	7	10	9	7	8	7	6	7	6	5	6	5	6	5	7	6	7	6	5	6	5	4
80	B	0-7	Interior	7	7	7	7	7	7	7	7	7	7	7	7	7	7	7	7	7	7	7	7	7	7	7	7	7	7	7	7	7	7	7	7	7	7	7	7	7	7	6
			Exposed	7	7	7	7	7	7	7	7	7	7	7	7	7	7	7	7	7	7	7	7	7	7	7	7	7	7	7	7	7	6	7	7	5	7	6	7	7	5	6
		7-20	Interior	7	7	7	7	7	7	7	7	7	7	7	7	7	7	7	7	7	7	7	7	7	7	7	7	7	7	7	7	7	7	7	7	7	7	7	6	7	7	5
			Exposed	7	7	7	7	7	7	7	7	7	7	7	7	7	7	7	7	7	7	7	7	7	7	7	7	7	7	6	7	7	5	7	6	7	7	5	6	6	5	5
		20-27	Interior	8	8	8	8	8	8	8	8	8	8	8	8	8	8	8	8	8	8	8	8	8	8	8	8	8	8	8	8	8	8	8	8	8	8	8	7	8	8	6
			Exposed	8	8	8	8	8	8	8	8	8	8	8	8	8	8	8	8	8	8	8	8	8	8	8	7	8	7	6	8	6	5	8	6	5	8	6	5	8	5	6
		27-45	Interior	11	11	11	11	11	11	11	11	11	11	11	11	11	11	11	11	11	11	11	11	11	11	11	11	11	11	11	10	10	10	10	10	10	9	9	9	9	9	8
			Exposed	11	11	11	11	11	11	11	11	11	11	11	11	11	11	11	11	11	11	11	11	11	11	11	9	10	9	7	9	8	6	8	7	6	7	6	7	6	7	5
	C	0-7	Interior	7	7	7	7	7	7	7	7	7	7	7	7	7	7	7	7	7	7	7	7	7	7	7	7	7	7	7	7	7	6	7	7	5	7	7	7	7	6	6
			Exposed	7	7	7	7	7	7	7	7	7	7	7	7	7	7	7	7	7	7	7	7	6	7	7	5	7	6	7	7	6	6	7	5	5	6	6	4	5	6	4
		7-20	Interior	7	7	7	7	7	7	7	7	7	7	7	7	7	7	7	7	7	7	7	7	7	7	7	7	7	7	6	7	7	5	7	6	5	7	5	6	7	5	5
			Exposed	7	7	7	7	7	7	7	7	7	7	7	7	7	7	7	7	7	6	7	7	5	7	6	5	7	5	6	6	5	5	6	6	5	5	5	4	7	5	3
		20-27	Interior	8	8	8	8	8	8	8	8	8	8	8	8	8	8	8	8	8	8	8	8	8	8	8	7	8	8	7	8	8	6	8	7	6	8	6	5	8	5	7
			Exposed	8	8	8	8	8	8	8	8	8	8	8	8	8	8	8	8	8	7	8	8	7	8	7	6	8	6	5	8	5	6	8	7	6	7	6	5	6	5	4
		27-45	Interior	11	11	11	11	11	11	11	11	11	11	11	11	11	11	11	11	11	11	10	10	10	10	10	9	9	9	8	9	9	7	8	8	6	7	7	5	8	5	7
			Exposed	11	11	11	11	11	11	11	11	10	11	11	9	10	10	8	10	9	7	8	7	6	7	6	5	6	6	7	5	5	6	5	7	6	7	6	5	6	5	4
	D	0-7	Interior	7	7	7	7	7	7	7	7	7	7	7	7	7	7	7	7	7	7	7	7	7	7	7	7	7	7	6	7	7	5	7	6	7	7	5	6	7	5	5
			Exposed	7	7	7	7	7	7	7	7	7	7	7	7	7	7	6	7	7	6	7	7	5	7	6	7	7	5	6	6	7	5	5	6	4	5	5	4	7	5	3
		7-20	Interior	8	8	8	8	8	8	8	8	8	8	8	8	8	8	8	8	8	8	8	8	7	8	8	6	8	7	5	8	6	7	7	5	6	6	7	5	6	6	4
			Exposed	8	8	8	8	8	8	8	8	7	8	8	6	8	8	5	8	7	5	8	6	7	7	5	6	6	7	5	5	6	4	5	5	4	6	4	3	5	4	3
		20-27	Interior	9	9	9	9	9	9	9	9	9	9	9	9	9	9	9	9	9	9	9	9	9	9	9	7	9	8	6	9	6	5	9	6	5	8	5	6	8	7	5
			Exposed	9	9	9	9	9	9	9	9	8	9	9	7	9	8	7	9	7	6	9	7	6	9	6	5	8	5	6	7	6	5	6	6	5	6	5	4	5	4	3
		27-45	Interior	12	12	12	12	12	12	12	12	12	12	12	12	11	11	11	11	11	11	11	11	10	10	10	9	10	10	7	9	8	6	8	7	6	7	6	5	6	5	7
			Exposed	12	12	12	12	12	11	12	12	10	12	11	9	11	10	8	11	9	7	10	9	7	8	7	6	7	6	5	6	5	6	5	7	6	7	6	5	6	5	4

* Cells with an astrisks indicates that the L-foot must be oriented in the Y- direction as indicated in the image.

10 Highlighted cell indicate 3-rail system span. Contact Unirac Engineering Services for support.

~~10~~ Highlighted cell with strikethrough indicate 3-rail system span and module clamp allowable capacity exceeds with 3-rails. 4-Rail system required. Contact Unirac Engineering Services for support.

UNIRAC

ASCE 7-22	II	30 ft	Ss = 1.25	23 sq.ft	PORTRAIT	CROSS-SLOPE	NXT	NXT COMBO	Stronghold BUTYL OSB
Design Standard	Risk Category	Roof Height	Seismic	Module Area	Orientation	Rail Direction	Rail Type	Clamp	Attachment

SPAN TABLES

Maximum Allowable Rail Spans for Rooftop Solar Panels Parallel to the Roof Surface (inches)

Ground Snow Load (psf)	Wind Exposure Category	Roof Tilt Angle (deg)	Panel Exposure	Basic Wind Speed (mph)																																						
				90			95			100			105			110			115			120			130			140			150			160			170			180		
				Roof Wind Zone																																						
				1	2	3	1	2	3	1	2	3	1	2	3	1	2	3	1	2	3	1	2	3	1	2	3	1	2	3	1	2	3	1	2	3	1	2	3	1	2	3
90	B	0-7	Interior	6	6	6	6	6	6	6	6	6	6	6	6	6	6	6	6	6	6	6	6	6	6	6	6	6	6	6	6	6	6	6	6	6	6	6	6	6	6	6
			Exposed	6	6	6	6	6	6	6	6	6	6	6	6	6	6	6	6	6	6	6	6	6	6	6	6	6	6	6	6	6	6	6	6	5	6	6	7	6	5	6
		7-20	Interior	6	6	6	6	6	6	6	6	6	6	6	6	6	6	6	6	6	6	6	6	6	6	6	6	6	6	6	6	6	6	6	6	6	6	6	6	6	6	5
			Exposed	6	6	6	6	6	6	6	6	6	6	6	6	6	6	6	6	6	6	6	6	6	6	6	6	6	6	6	6	6	5	6	6	7	6	5	6	6	5	5
		20-27	Interior	8	8	8	8	8	8	8	8	8	8	8	8	8	8	8	8	8	8	8	8	8	8	8	8	8	8	8	8	8	8	8	8	8	8	8	7	8	8	6
			Exposed	8	8	8	8	8	8	8	8	8	8	8	8	8	8	8	8	8	8	8	8	8	8	8	8	8	8	7	8	7	6	8	6	5	8	6	5	8	5	6
		27-45	Interior	10	10	10	10	10	10	10	10	10	10	10	10	10	10	10	10	10	10	10	10	10	10	10	10	10	10	10	9	9	9	9	9	9	9	9	9	8	8	8
			Exposed	10	10	10	10	10	10	10	10	10	10	10	10	10	10	10	10	10	10	10	10	10	10	10	10	10	10	9	9	9	7	9	8	6	8	7	6	7	6	5
	C	0-7	Interior	6	6	6	6	6	6	6	6	6	6	6	6	6	6	6	6	6	6	6	6	6	6	6	6	6	6	6	6	6	6	6	6	5	6	6	7	6	6	6
			Exposed	6	6	6	6	6	6	6	6	6	6	6	6	6	6	6	6	6	6	6	6	6	6	6	5	6	6	7	6	6	6	6	5	5	6	6	4	5	6	4
		7-20	Interior	6	6	6	6	6	6	6	6	6	6	6	6	6	6	6	6	6	6	6	6	6	6	6	6	6	6	6	6	6	5	6	6	5	6	5	6	6	5	5
			Exposed	6	6	6	6	6	6	6	6	6	6	6	6	6	6	6	6	6	6	6	6	5	6	6	5	6	5	6	6	5	5	6	6	5	5	5	4	7	5	3
		20-27	Interior	8	8	8	8	8	8	8	8	8	8	8	8	8	8	8	8	8	8	8	8	8	8	8	8	8	8	7	8	8	6	8	7	6	7	6	5	7	5	7
			Exposed	8	8	8	8	8	8	8	8	8	8	8	8	8	8	8	8	8	7	8	8	7	8	7	6	8	6	5	8	5	6	8	7	6	7	6	5	6	5	4
		27-45	Interior	10	10	10	10	10	10	10	10	10	10	10	10	10	10	10	10	10	10	10	10	10	9	9	9	9	9	9	8	8	8	8	8	7	8	8	6	7	7	5
			Exposed	10	10	10	10	10	10	10	10	10	10	10	10	10	10	10	10	10	9	10	10	8	9	9	7	8	7	6	7	6	5	6	6	7	5	5	6	5	7	5
	D	0-7	Interior	7	7	7	7	7	7	7	7	7	7	7	7	7	7	7	7	7	7	7	7	7	7	7	7	7	7	6	7	7	5	7	6	7	7	5	6	7	5	5
			Exposed	7	7	7	7	7	7	7	7	7	7	7	7	7	7	6	7	7	6	7	7	5	7	6	7	7	5	6	6	7	5	5	6	4	5	5	4	7	5	3
		7-20	Interior	7	7	7	7	7	7	7	7	7	7	7	7	7	7	7	7	7	7	7	7	7	7	7	6	7	7	5	7	6	7	7	5	6	6	7	5	6	6	4
			Exposed	7	7	7	7	7	7	7	7	7	7	7	7	7	7	5	7	7	5	7	6	7	7	5	6	6	7	5	5	6	4	5	5	4	6	4	3	5	4	3
		20-27	Interior	8	8	8	8	8	8	8	8	8	8	8	8	8	8	8	8	8	8	8	8	8	8	8	7	8	8	6	8	6	5	8	6	5	8	5	6	7	7	5
			Exposed	8	8	8	8	8	8	8	8	8	8	8	7	8	8	7	8	7	6	8	7	6	8	6	5	8	5	6	7	6	5	6	6	5	6	5	4	5	4	3
		27-45	Interior	11	11	11	11	11	11	11	11	11	11	11	11	10	10	10	10	10	10	10	10	10	9	9	9	9	9	7	8	8	6	8	7	6	7	6	5	6	5	7
			Exposed	11	11	11	11	11	11	11	11	10	11	11	9	10	10	8	10	9	7	10	9	7	8	7	6	7	6	5	6	5	6	5	7	6	7	6	5	6	5	4
100	B	0-7	Interior	5	5	5	5	5	5	5	5	5	5	5	5	5	5	5	5	5	5	5	5	5	5	5	5	5	5	5	5	5	5	5	5	5	5	5	5	5	5	5
			Exposed	5	5	5	5	5	5	5	5	5	5	5	5	5	5	5	5	5	5	5	5	5	5	5	5	5	5	5	5	5	5	5	5	5	5	5	7	5	5	6
		7-20	Interior	5	5	5	5	5	5	5	5	5	5	5	5	5	5	5	5	5	5	5	5	5	5	5	5	5	5	5	5	5	5	5	5	5	5	5	5	5	5	5
			Exposed	5	5	5	5	5	5	5	5	5	5	5	5	5	5	5	5	5	5	5	5	5	5	5	5	5	5	5	5	5	5	5	5	7	5	5	6	5	5	5
		20-27	Interior	7	7	7	7	7	7	7	7	7	7	7	7	7	7	7	7	7	7	7	7	7	7	7	7	7	7	7	7	7	7	7	7	7	7	7	7	7	7	6
			Exposed	7	7	7	7	7	7	7	7	7	7	7	7	7	7	7	7	7	7	7	7	7	7	7	7	7	7	7	7	7	6	7	6	5	7	6	5	7	5	6
		27-45	Interior	9	9	9	9	9	9	9	9	9	9	9	9	9	9	9	9	9	9	9	9	9	9	9	9	9	9	9	9	9	9	8	8	8	8	8	8	8	8	8
			Exposed	9	9	9	9	9	9	9	9	9	9	9	9	9	9	9	9	9	9	9	9	9	9	9	9	9	9	9	9	9	7	8	8	6	8	7	6	7	6	5
	C	0-7	Interior	5	5	5	5	5	5	5	5	5	5	5	5	5	5	5	5	5	5	5	5	5	5	5	5	5	5	5	5	5	5	5	5	5	5	5	7	5	5	6
			Exposed	5	5	5	5	5	5	5	5	5	5	5	5	5	5	5	5	5	5	5	5	5	5	5	5	5	5	7	5	5	6	5	5	5	5	6	4	5	6	4
		7-20	Interior	5	5	5	5	5	5	5	5	5	5	5	5	5	5	5	5	5	5	5	5	5	5	5	5	5	5	5	5	5	5	5	5	5	5	5	6	5	5	5
			Exposed	5	5	5	5	5	5	5	5	5	5	5	5	5	5	5	5	5	5	5	5	5	5	5	5	5	5	6	5	5	5	5	6	5	5	5	4	7	5	3
		20-27	Interior	7	7	7	7	7	7	7	7	7	7	7	7	7	7	7	7	7	7	7	7	7	7	7	7	7	7	7	7	7	6	7	7	6	7	6	5	7	5	7
			Exposed	7	7	7	7	7	7	7	7	7	7	7	7	7	7	7	7	7	7	7	7	7	7	7	6	7	6	5	7	5	6	7	7	6	7	6	5	6	5	4
		27-45	Interior	9	9	9	9	9	9	9	9	9	9	9	9	9	9	9	9	9	9	9	9	9	9	9	9	9	9	9	8	8	8	8	8	7	7	6	5	6	5	7
			Exposed	9	9	9	9	9	9	9	9	9	9	9	9	9	9	9	9	9	9	9	9	8	9	9	7	8	7	6	7	6	5	6	6	7	5	5	6	5	7	5
	D	0-7	Interior	6	6	6	6	6	6	6	6	6	6	6	6	6	6	6	6	6	6	6	6	6	6	6	6	6	6	6	6	6	5	6	6	7	6	5	6	6	5	5
			Exposed	6	6	6	6	6	6	6	6	6	6	6	6	6	6	6	6	6	6	6	6	5	6	6	7	6	5	6	6	7	5	5	6	4	5	5	4	7	5	3
		7-20	Interior	6	6	6	6	6	6	6	6	6	6	6	6	6	6	6	6	6	6	6	6	6	6	6	6	6	6	5	6	6	7	6	5	6	6	7	5	6	6	4
			Exposed	6	6	6	6	6	6	6	6	6	6	6	6	6	6	5	6	6	5	6	6	7	5	6	6	6	7	5	5	6	4	5	5	4	6	4	3	5	4	3
		20-27	Interior	8	8	8	8	8	8	8	8	8	8	8	8	8	8	8	8	8	8	8	8	8	8	8	7	8	8	6	8	6	5	7	6	5	7	5	6	7	7	5
			Exposed	8	8	8	8	8	8	8	8	8	8	8	7	8	8	7	8	7	6	8	7	6	8	6	5	8	5	6	7	6	5	6	6	5	6	5	4	5	4	3
		27-45	Interior	10	10	10	10	10	10	10	10	10	10	10	10	10	10	10	10	10	10	10	10	10	9	9	9	9	9	9	8	8	7	8	8	6	7	7	6	7	6	5
			Exposed	10	10	10	10	10	10	10	10	10	10	10	9	10	10	8	9	9	7	9	9	7	8	7	6	7	6	5	6	5	6	5	7	6	7	6	5	6	5	4

* Cells with an astrisks indicates that the L-foot must be oriented in the Y- direction as indicated in the image.

10 Highlighted cell indicate 3-rail system span. Contact Unirac Engineering Services for support.

~~10~~ Highlighted cell with strikethrough indicate 3-rail system span and module clamp allowable capacity exceeds with 3-rails. 4-Rail system required. Contact Unirac Engineering Services for support.

UNIRAC

ASCE 7-22	II	30 ft	Ss = 1.25	23 sq.ft	LANDSCAPE	CROSS-SLOPE	NXT	NXT COMBO	Stronghold BUTYL OSB
Design Standard	Risk Category	Roof Height	Seismic	Module Area	Orientation	Rail Direction	Rail Type	Clamp	Attachment

SPAN TABLES

Maximum Allowable Rail Spans for Rooftop Solar Panels Parallel to the Roof Surface (inches)

Ground Snow Load (psf)	Wind Exposure Category	Roof Tilt Angle (deg)	Panel Exposure	Basic Wind Speed (mph)																																								
				90			95			100			105			110			115			120			130			140			150			160			170			180		
				Roof Wind Zone																																								
				1	2	3	1	2	3	1	2	3	1	2	3	1	2	3	1	2	3	1	2	3	1	2	3	1	2	3	1	2	3	1	2	3	1	2	3	1	2	3
0	B	0-7	Interior	56	56	54	56	56	48	56	56	43	56	55	38	56	50	35	56	45	31	56	41	29	48	35	24	41	29	21	35	25	18	31	22	15	27	19	14	24	17	12
			Exposed	56	50	35	56	44	31	55	39	27	49	35	25	45	32	22	40	29	20	37	26	19	31	22	16	26	19	13	23	16	12	20	14	10	17	13	9	15	11	12
		7-20	Interior	56	56	47	56	56	42	56	51	37	56	46	34	56	42	30	53	38	28	48	34	25	40	29	21	34	25	18	29	21	16	26	19	14	22	16	12	20	14	11
			Exposed	56	41	30	51	37	27	46	33	24	41	30	22	37	27	20	34	24	18	31	22	16	26	19	14	22	16	12	19	14	10	17	12	9	15	11	12	13	9	10
		20-27	Interior	57	57	57	57	57	51	57	56	45	57	50	41	57	45	37	57	41	33	57	37	31	55	31	26	46	27	22	40	23	19	35	20	16	30	18	14	27	16	13
			Exposed	57	45	37	57	40	33	57	36	29	56	32	26	51	29	24	46	26	22	42	24	20	35	20	17	30	17	14	26	15	12	22	13	11	20	11	9	17	10	8
		27-45	Interior	57	57	57	57	57	57	57	57	54	57	57	49	57	56	44	57	51	40	52	47	37	44	39	31	37	33	26	32	29	23	28	25	20	25	22	17	22	20	15
			Exposed	57	56	44	56	50	39	50	45	35	45	40	32	41	36	29	37	33	26	34	30	24	28	25	20	24	22	17	21	19	15	18	16	13	16	14	11	14	13	10
	C	0-7	Interior	56	53	37	56	47	32	56	42	29	52	37	26	47	34	24	43	31	21	39	28	20	33	24	17	28	20	14	24	17	12	21	15	11	18	13	9	16	12	13
			Exposed	47	34	24	42	30	21	37	27	19	33	24	17	30	22	15	27	20	14	25	18	13	21	15	11	18	13	9	16	11	12	14	10	11	12	13	9	11	12	8
		7-20	Interior	56	44	32	54	39	28	48	35	26	43	31	23	39	28	21	36	26	19	32	23	17	27	20	15	23	17	12	20	15	11	17	13	9	15	11	13	14	10	11
			Exposed	39	28	21	35	25	18	31	22	17	28	20	15	25	18	13	23	17	12	21	15	11	18	13	9	15	11	12	13	9	11	11	13	9	10	11	8	9	10	7
		20-27	Interior	57	48	39	57	42	35	57	38	31	57	34	28	54	31	25	49	28	23	44	25	21	37	21	18	32	18	15	27	16	13	24	14	11	21	12	10	18	11	9
			Exposed	53	31	25	47	27	22	42	24	20	38	22	18	34	20	16	31	18	15	28	16	14	24	14	11	20	12	10	18	10	8	15	9	11	14	12	10	12	11	9
		27-45	Interior	57	57	47	57	53	41	53	47	37	48	42	33	43	38	30	39	35	28	36	32	25	30	27	21	26	23	18	22	20	16	19	17	14	17	15	12	15	13	11
			Exposed	43	38	30	38	34	27	34	31	24	31	28	22	28	25	20	25	23	18	23	21	16	20	18	14	17	15	12	14	13	10	13	11	9	11	10	12	10	9	11
	D	0-7	Interior	56	43	30	54	39	27	48	34	24	43	31	22	39	28	20	35	25	18	32	23	16	27	20	14	23	17	12	20	14	10	17	13	9	15	11	12	13	10	10
			Exposed	39	28	20	34	25	17	31	22	16	28	20	14	25	18	13	23	16	12	21	15	11	17	13	9	15	11	12	13	9	10	11	12	9	10	11	8	9	10	7
		7-20	Interior	50	36	27	45	32	24	40	29	21	36	26	19	32	23	17	29	21	16	27	19	14	23	16	12	19	14	10	17	12	9	15	11	12	13	9	10	11	13	9
			Exposed	32	23	17	29	21	15	26	19	14	23	17	12	21	15	11	19	14	10	17	13	9	15	11	12	13	9	10	11	12	9	9	10	8	8	9	7	11	8	6
		20-27	Interior	57	39	32	57	35	29	55	31	26	49	28	23	44	25	21	40	23	19	37	21	17	31	18	15	26	15	13	23	13	11	20	11	9	17	10	8	15	9	11
			Exposed	44	25	21	39	23	19	35	20	17	31	18	15	28	16	14	26	15	12	24	14	11	20	12	9	17	10	12	15	8	11	13	11	9	11	10	8	10	9	7
		27-45	Interior	55	49	39	49	44	34	44	39	31	39	35	28	36	32	25	32	29	23	30	26	21	25	22	18	21	19	15	18	17	13	16	14	11	14	13	10	13	11	9
			Exposed	36	32	25	32	28	22	28	25	20	26	23	18	23	21	16	21	19	15	19	17	14	16	15	11	14	12	10	12	11	8	10	9	11	9	13	10	12	11	9
10	B	0-7	Interior	45	45	45	45	45	45	45	45	43	45	45	38	45	45	35	45	45	31	45	41	29	45	35	24	41	29	21	35	25	18	31	22	15	27	19	14	24	17	12
			Exposed	45	45	35	45	44	31	45	39	27	45	35	25	45	32	22	40	29	20	37	26	19	31	22	16	26	19	13	23	16	12	20	14	10	17	13	9	15	11	12
		7-20	Interior	45	45	45	45	45	42	45	45	37	45	45	34	45	42	30	45	38	28	45	34	25	40	29	21	34	25	18	29	21	16	26	19	14	22	16	12	20	14	11
			Exposed	45	41	30	45	37	27	45	33	24	41	30	22	37	27	20	34	24	18	31	22	16	26	19	14	22	16	12	19	14	10	17	12	9	15	11	12	13	9	10
		20-27	Interior	52	52	52	52	52	51	52	52	45	52	50	41	52	45	37	52	41	33	52	37	31	52	31	26	46	27	22	40	23	19	35	20	16	30	18	14	27	16	13
			Exposed	52	45	37	52	40	33	52	36	29	52	32	26	51	29	24	46	26	22	42	24	20	35	20	17	30	17	14	26	15	12	22	13	11	20	11	9	17	10	8
		27-45	Interior	56	56	56	56	56	56	56	56	54	56	56	49	56	56	44	56	51	40	52	47	37	44	39	31	37	33	26	32	29	23	28	25	20	25	22	17	22	20	15
			Exposed	56	56	44	56	50	39	50	45	35	45	40	32	41	36	29	37	33	26	34	30	24	28	25	20	24	22	17	21	19	15	18	16	13	16	14	11	14	13	10
	C	0-7	Interior	45	45	37	45	45	32	45	42	29	45	37	26	45	34	24	43	31	21	39	28	20	33	24	17	28	20	14	24	17	12	21	15	11	18	13	9	16	12	13
			Exposed	45	34	24	42	30	21	37	27	19	33	24	17	30	22	15	27	20	14	25	18	13	21	15	11	18	13	9	16	11	12	14	10	11	12	13	9	11	12	8
		7-20	Interior	45	44	32	45	39	28	45	35	26	43	31	23	39	28	21	36	26	19	32	23	17	27	20	15	23	17	12	20	15	11	17	13	9	15	11	13	14	10	11
			Exposed	39	28	21	35	25	18	31	22	17	28	20	15	25	18	13	23	17	12	21	15	11	18	13	9	15	11	12	13	9	11	11	13	9	10	11	8	9	10	7
		20-27	Interior	52	48	39	52	42	35	52	38	31	52	34	28	52	31	25	49	28	23	44	25	21	37	21	18	32	18	15	27	16	13	24	14	11	21	12	10	18	11	9
			Exposed	52	31	25	47	27	22	42	24	20	38	22	18	34	20	16	31	18	15	28	16	14	24	14	11	20	12	10	18	10	8	15	9	11	14	12	10	12	11	9
		27-45	Interior	56	56	47	56	53	41	53	47	37	48	42	33	43	38	30	39	35	28	36	32	25	30	27	21	26	23	18	22	20	16	19	17	14	17	15	12	15	13	11
			Exposed	43	38	30	38	34	27	34	31	24	31	28	22	28	25	20	25	23	18	23	21	16	20	18	14	17	15	12	14	13	10	13	11	9	11	10	12	10	9	11
	D	0-7	Interior	45	43	30	45	39	27	45	34	24	43	31	22	39	28	20	35	25	18	32	23	16	27	20	14	23	17	12	20	14	10	17	13	9	15	11	12	13	10	10
			Exposed	39	28	20	34	25	17	31	22	16	28	20	14	25	18	13	23	16	12	21	15	11	17	13	9	15	11	12	13	9	10	11	12	9	10	11	8	9	10	7
		7-20	Interior	45	36	27	45	32	24	40	29	21	36	26	19	32	23	17	29	21	16	27	19	14	23	16	12	19	14	10	17	12	9	15	11	12	13	9	10	11	13	9
			Exposed	32	23	17	29	21	15	26	19	14	23	17	12	21	15	11	19	14	10	17	13	9	15	11	12	13	9	10	11	12	9	9	10	8	8	9	7	11	8	6
		20-27	Interior	53	39	32	53	35	29	53	31	26	49	28	23	44	25	21	40	23	19	37	21	17	31	18	15	26	15	13	23	13	11	20	11	9	17	10	8	15	9	11
			Exposed	44	25	21	39	23	19	35	20	17	31	18	15	28	16	14	26	15	12	24	14	11	20	12	9	17	10	12	15	8	11	13	11	9	11	10	8	10	9	7
		27-45	Interior	55	49	39	49	44	34	44	39	31	39	35	28	36	32	25	32	29	23	30	26	21	25	22	18	21	19	15	18	17	13	16	14	11	14	13	10	13	11	9
			Exposed	36	32	25	32	28	22	28	25	20	26	23	18	23	21	16	21	19	15	19	17	14	16	15	11	14	12	10	12	11	8	10	9	11	9	13	10	12	11	9
20	B	0-7	Interior	33	33	33	33	33	33	33	33	33	33	33	33	33	33	33	33	33	31	33	33	29	33	33	24	33	29	21	33	25	18	31	22	15	27	19	14	24	17	12
			Exposed	33	33	33	33	33	31	33	33	27	33	33	25	33	32	22	33	29	20	33	26	19	31	22	16	26	19	13	23	16	12	20	14	10	17	13	9	15	11	12
		7-20	Interior	34	34	34	34	34	34	34	34	34	34	34	34	34	34	30	34	34	28	34	34	25	34	29	21	34	25	18	29	21	16	26	19	14	22	16	12	20	14	11
			Exposed	34	34	30	34	34	27	34	33	24	34	30	22	34	27	20	34	24	18	31	22	16	26	19	14	22	16	12	19	14	10	17	12	9	15	11	12	13	9	10
		20-27	Interior	41	41	41	41	41	41	41	41	41	41	41	41	41	41	37	41	41	33	41	37	31	41	31	26	41	27	22	40	23	19	35	20	16	30	18	14	27	16	13
			Exposed	41	41	37	41	40	33	41	36	29	41	32	26	41	29	24	41	26	22	41	24	20	35	20	17	30	17	14	26	15	12	22	13	11	20	11	9	17	10	8
		27-45	Interior	46	46	46	46	46	46	46	46	46	46	46	46	46	46	44	46	46	40	46	46	37	44	39	31	37	33	26	32	29	23	28	25	20	25	22	17	22	20	15
			Exposed	46	46	44	46	46	39	46	45	35	45	40	32	41	36	29	37	33	26	34	30	24	28	25	20	24	22	17	21	19	15	18	16	13	16	14	11	14	13	10
	C	0-7	Interior	33	33	33	33	33	32	33	33	29	33	33	26	33	33	24	33	31	21	33	28	20	33	24	17	28	20	14	24	17	12	21	15	11	18	13	9	16	12	13
			Exposed	33	33	24	33	30	21	33	27	19	33	24	17	30	22	15	27	20	14	25	18	13	21	15	11	18	13	9	16	11	12	14	10	11	12	13	9	11	12	8
		7-20	Interior	34	34	32	34	34	28	34	34	26	34	31	23	34	28	21	34	26	19	32	23	17	27	20	15	23	17	12	20	15	11	17	13	9	15	11	13	14	10	11
			Exposed	34	28	21	34	25	18	31	22	17	28	20	15	25	18	13	23	17	12	21	15	11	18	13	9	15	11	12	13	9	11	11	13	9	10	11	8	9	10	7
		20-27	Interior	41	41	39	41	41	35	41	38	31	41	34	28	41	31	25	41	28	23	41	25	21	37	21	18	32	18	15	27	16	13	24	14	11	21	12	10	18	11	9
			Exposed	41	31	25	41	27	22	41	24	20	38	22	18	34	20	16	31	18	15	28	16	14	24	14	11	20	12	10	18	10	8	15	9	11	14	12	10	12	11	9
		27-45	Interior	46	46	46	46	46	41	46	46	37	46	42	33	43	38	30	39	35	28	36	32	25	30	27	21	26	23	18	22	20	16	19	17	14	17	15	12	15	13	11
			Exposed	43	38	30	38	34	27	34	31	24	31	28	22	28	25	20	25	23	18	23	21	16	20	18	14	17	15	12	14	13	10	13	11	9	11	10	12	10	9	11
	D	0-7	Interior	33	33	30	33	33	27	33	33	24	33	31	22	33	28	20	33	25	18	32	23	16	27	20	14	23	17	12	20	14	10	17	13	9	15	11	12	13	10	10
			Exposed	33	28	20	33	25	17	31	22	16	28	20	14	25	18	13	23	16	12	21	15	11	17	13	9	15	11	12	13	9	10	11	12	9	10	11	8	9	10	7
		7-20	Interior	34	34	27	34	32	24	34	29	21	34	26	19	32	23	17	29	21	16	27	19	14	23	16	12	19	14	10	17	12	9	15	11	12	13	9	10	11	13	9
			Exposed	32	23	17	29	21	15	26	19	14	23	17	12	21	15	11	19	14	10	17	13	9	15	11	12	13	9	10	11	12	9	9	10	8	8	9	7	11	8	6
		20-27	Interior	43	39	32	43	35	29	43	31	26	43	28	23	43	25	21	40	23	19	37	21	17	31	18	15	26	15	13	23	13	11	20	11	9	17	10	8	15	9	11
			Exposed	43	25	21	39	23	19	35	20	17	31	18	15	28	16	14	26	15	12	24	14	11	20	12	9	17	10	12	15	8	11	13	11	9	11	10	8	10	9	7
		27-45	Interior	47	47	39	47	44	34	44	39	31	39	35	28	36	32	25	32	29	23	30	26	21	25	22	18	21	19	15	18	17	13	16	14	11	14	13	10	13	11	9
			Exposed	36	32	25	32	28	22	28	25	20	26	23	18	23	21	16	21	19	15	19	17	14	16	15	11	14	12	10	12	11	8	10	9	11	9	13	10	12	11	9

* Cells with an astrisks indicates that the L-foot must be oriented in the Y- direction as indicated in the image.

10 Highlighted cell indicate 3-rail system span. Contact Unirac Engineering Services for support.

~~10~~ Highlighted cell with strikethrough indicate 3-rail system span and module clamp allowable capacity exceeds with 3-rails. 4-Rail system required. Contact Unirac Engineering Services for support.

UNIRAC

ASCE 7-22	II	30 ft	Ss = 1.25	23 sq.ft	LANDSCAPE	CROSS-SLOPE	NXT	NXT COMBO	Stronghold BUTYL OSB
Design Standard	Risk Category	Roof Height	Seismic	Module Area	Orientation	Rail Direction	Rail Type	Clamp	Attachment

SPAN TABLES

Maximum Allowable Rail Spans for Rooftop Solar Panels Parallel to the Roof Surface (inches)

Ground Snow Load (psf)	Wind Exposure Category	Roof Tilt Angle (deg)	Panel Exposure	Basic Wind Speed (mph)																																						
				90			95			100			105			110			115			120			130			140			150			160			170			180		
				Roof Wind Zone																																						
				1	2	3	1	2	3	1	2	3	1	2	3	1	2	3	1	2	3	1	2	3	1	2	3	1	2	3	1	2	3	1	2	3	1	2	3	1	2	3
30	B	0-7	Interior	27	27	27	27	27	27	27	27	27	27	27	27	27	27	27	27	27	27	27	27	27	27	27	24	27	27	21	27	25	18	27	22	15	27	19	14	24	17	12
			Exposed	27	27	27	27	27	27	27	27	27	27	27	25	27	27	22	27	27	20	27	26	19	27	22	16	26	19	13	23	16	12	20	14	10	17	13	9	15	11	12
		7-20	Interior	27	27	27	27	27	27	27	27	27	27	27	27	27	27	27	27	27	27	27	27	25	27	27	21	27	25	18	27	21	16	26	19	14	22	16	12	20	14	11
			Exposed	27	27	27	27	27	27	27	27	24	27	27	22	27	27	20	27	24	18	27	22	16	26	19	14	22	16	12	19	14	10	17	12	9	15	11	12	13	9	10
		20-27	Interior	34	34	34	34	34	34	34	34	34	34	34	34	34	34	34	34	34	33	34	34	31	34	31	26	34	27	22	34	23	19	34	20	16	30	18	14	27	16	13
			Exposed	34	34	34	34	34	33	34	34	29	34	32	26	34	29	24	34	26	22	34	24	20	34	20	17	30	17	14	26	15	12	22	13	11	20	11	9	17	10	8
		27-45	Interior	38	38	38	38	38	38	38	38	38	38	38	38	38	38	38	38	38	38	38	38	37	38	38	31	37	33	26	32	29	23	28	25	20	25	22	17	22	20	15
			Exposed	38	38	38	38	38	38	38	38	35	38	38	32	38	36	29	37	33	26	34	30	24	28	25	20	24	22	17	21	19	15	18	16	13	16	14	11	14	13	10
	C	0-7	Interior	27	27	27	27	27	27	27	27	27	27	27	26	27	27	24	27	27	21	27	27	20	27	24	17	27	20	14	24	17	12	21	15	11	18	13	9	16	12	13
			Exposed	27	27	24	27	27	21	27	27	19	27	24	17	27	22	15	27	20	14	25	18	13	21	15	11	18	13	9	16	11	12	14	10	11	12	13	9	11	12	8
		7-20	Interior	27	27	27	27	27	27	27	27	26	27	27	23	27	27	21	27	26	19	27	23	17	27	20	15	23	17	12	20	15	11	17	13	9	15	11	13	14	10	11
			Exposed	27	27	21	27	25	18	27	22	17	27	20	15	25	18	13	23	17	12	21	15	11	18	13	9	15	11	12	13	9	11	11	13	9	10	11	8	9	10	7
		20-27	Interior	34	34	34	34	34	34	34	34	31	34	34	28	34	31	25	34	28	23	34	25	21	34	21	18	32	18	15	27	16	13	24	14	11	21	12	10	18	11	9
			Exposed	34	31	25	34	27	22	34	24	20	34	22	18	34	20	16	31	18	15	28	16	14	24	14	11	20	12	10	18	10	8	15	9	11	14	12	10	12	11	9
		27-45	Interior	38	38	38	38	38	38	38	38	37	38	38	33	38	38	30	38	35	28	36	32	25	30	27	21	26	23	18	22	20	16	19	17	14	17	15	12	15	13	11
			Exposed	38	38	30	38	34	27	34	31	24	31	28	22	28	25	20	25	23	18	23	21	16	20	18	14	17	15	12	14	13	10	13	11	9	11	10	12	10	9	11
	D	0-7	Interior	27	27	27	27	27	27	27	27	24	27	27	22	27	27	20	27	25	18	27	23	16	27	20	14	23	17	12	20	14	10	17	13	9	15	11	12	13	10	10
			Exposed	27	27	20	27	25	17	27	22	16	27	20	14	25	18	13	23	16	12	21	15	11	17	13	9	15	11	12	13	9	10	11	12	9	10	11	8	9	10	7
		7-20	Interior	27	27	27	27	27	24	27	27	21	27	26	19	27	23	17	27	21	16	27	19	14	23	16	12	19	14	10	17	12	9	15	11	12	13	9	10	11	13	9
			Exposed	27	23	17	27	21	15	26	19	14	23	17	12	21	15	11	19	14	10	17	13	9	15	11	12	13	9	10	11	12	9	9	10	8	8	9	7	11	8	6
		20-27	Interior	36	36	32	36	35	29	36	31	26	36	28	23	36	25	21	36	23	19	36	21	17	31	18	15	26	15	13	23	13	11	20	11	9	17	10	8	15	9	11
			Exposed	36	25	21	36	23	19	35	20	17	31	18	15	28	16	14	26	15	12	24	14	11	20	12	9	17	10	12	15	8	11	13	11	9	11	10	8	10	9	7
		27-45	Interior	40	40	39	40	40	34	40	39	31	39	35	28	36	32	25	32	29	23	30	26	21	25	22	18	21	19	15	18	17	13	16	14	11	14	13	10	13	11	9
			Exposed	36	32	25	32	28	22	28	25	20	26	23	18	23	21	16	21	19	15	19	17	14	16	15	11	14	12	10	12	11	8	10	9	11	9	13	10	12	11	9
40	B	0-7	Interior	25	25	25	25	25	25	25	25	25	25	25	25	25	25	25	25	25	25	25	25	25	25	25	24	25	25	21	25	25	18	25	22	15	25	19	14	24	17	12
			Exposed	25	25	25	25	25	25	25	25	25	25	25	25	25	25	22	25	25	20	25	25	19	25	22	16	25	19	13	23	16	12	20	14	10	17	13	9	15	11	12
		7-20	Interior	25	25	25	25	25	25	25	25	25	25	25	25	25	25	25	25	25	25	25	25	25	25	25	21	25	25	18	25	21	16	25	19	14	22	16	12	20	14	11
			Exposed	25	25	25	25	25	25	25	25	24	25	25	22	25	25	20	25	24	18	25	22	16	25	19	14	22	16	12	19	14	10	17	12	9	15	11	12	13	9	10
		20-27	Interior	29	29	29	29	29	29	29	29	29	29	29	29	29	29	29	29	29	29	29	29	29	29	29	26	29	27	22	29	23	19	29	20	16	28	18	14	27	16	13
			Exposed	29	29	29	29	29	29	29	29	29	29	29	26	29	29	24	29	26	22	29	24	20	29	20	17	29	17	14	26	15	12	22	13	11	20	11	9	17	10	8
		27-45	Interior	33	33	33	33	33	33	33	33	33	33	33	33	33	33	33	33	33	33	33	33	33	33	33	31	32	32	26	30	29	23	28	25	20	25	22	17	22	20	15
			Exposed	33	33	33	33	33	33	33	33	33	33	33	32	33	33	29	33	33	26	33	30	24	28	25	20	24	22	17	21	19	15	18	16	13	16	14	11	14	13	10
	C	0-7	Interior	25	25	25	25	25	25	25	25	25	25	25	25	25	25	24	25	25	21	25	25	20	25	24	17	25	20	14	24	17	12	21	15	11	18	13	9	16	12	13
			Exposed	25	25	24	25	25	21	25	25	19	25	24	17	25	22	15	25	20	14	25	18	13	21	15	11	18	13	9	16	11	12	14	10	11	12	13	9	11	12	8
		7-20	Interior	25	25	25	25	25	25	25	25	25	25	25	23	25	25	21	25	25	19	25	23	17	25	20	15	23	17	12	20	15	11	17	13	9	15	11	13	14	10	11
			Exposed	25	25	21	25	25	18	25	22	17	25	20	15	25	18	13	23	17	12	21	15	11	18	13	9	15	11	12	13	9	11	11	13	9	10	11	8	9	10	7
		20-27	Interior	29	29	29	29	29	29	29	29	29	29	29	28	29	29	25	29	28	23	29	25	21	29	21	18	28	18	15	27	16	13	24	14	11	21	12	10	18	11	9
			Exposed	29	29	25	29	27	22	29	24	20	29	22	18	29	20	16	29	18	15	28	16	14	24	14	11	20	12	10	18	10	8	15	9	11	14	12	10	12	11	9
		27-45	Interior	33	33	33	33	33	33	33	33	33	33	33	33	33	33	30	33	33	28	32	32	25	30	27	21	26	23	18	22	20	16	19	17	14	17	15	12	15	13	11
			Exposed	33	33	30	33	33	27	33	31	24	31	28	22	28	25	20	25	23	18	23	21	16	20	18	14	17	15	12	14	13	10	13	11	9	11	10	12	10	9	11
	D	0-7	Interior	26	26	26	26	26	26	26	26	24	26	26	22	26	26	20	26	25	18	26	23	16	26	20	14	23	17	12	20	14	10	17	13	9	15	11	12	13	10	10
			Exposed	26	26	20	26	25	17	26	22	16	26	20	14	25	18	13	23	16	12	21	15	11	17	13	9	15	11	12	13	9	10	11	12	9	10	11	8	9	10	7
		7-20	Interior	27	27	27	27	27	24	27	27	21	27	26	19	27	23	17	27	21	16	27	19	14	23	16	12	19	14	10	17	12	9	15	11	12	13	9	10	11	13	9
			Exposed	27	23	17	27	21	15	26	19	14	23	17	12	21	15	11	19	14	10	17	13	9	15	11	12	13	9	10	11	12	9	9	10	8	8	9	7	11	8	6
		20-27	Interior	31	31	31	31	31	29	31	31	26	31	28	23	31	25	21	31	23	19	31	21	17	30	18	15	26	15	13	23	13	11	20	11	9	17	10	8	15	9	11
			Exposed	31	25	21	31	23	19	31	20	17	31	18	15	28	16	14	26	15	12	24	14	11	20	12	9	17	10	12	15	8	11	13	11	9	11	10	8	10	9	7
		27-45	Interior	35	35	35	35	35	34	35	35	31	34	34	28	33	32	25	32	29	23	30	26	21	25	22	18	21	19	15	18	17	13	16	14	11	14	13	10	13	11	9
			Exposed	35	32	25	32	28	22	28	25	20	26	23	18	23	21	16	21	19	15	19	17	14	16	15	11	14	12	10	12	11	8	10	9	11	9	13	10	12	11	9
50	B	0-7	Interior	21	21	21	21	21	21	21	21	21	21	21	21	21	21	21	21	21	21	21	21	21	21	21	21	21	21	21	21	21	18	21	21	15	21	19	14	21	17	12
			Exposed	21	21	21	21	21	21	21	21	21	21	21	21	21	21	21	21	21	20	21	21	19	21	21	16	21	19	13	21	16	12	20	14	10	17	13	9	15	11	12
		7-20	Interior	21	21	21	21	21	21	21	21	21	21	21	21	21	21	21	21	21	21	21	21	21	21	21	21	21	21	18	21	21	16	21	19	14	21	16	12	20	14	11
			Exposed	21	21	21	21	21	21	21	21	21	21	21	21	21	21	20	21	21	18	21	21	16	21	19	14	21	16	12	19	14	10	17	12	9	15	11	12	13	9	10
		20-27	Interior	25	25	25	25	25	25	25	25	25	25	25	25	25	25	25	25	25	25	25	25	25	25	25	25	25	25	22	25	23	19	25	20	16	24	18	14	24	16	13
			Exposed	25	25	25	25	25	25	25	25	25	25	25	25	25	25	24	25	25	22	25	24	20	25	20	17	25	17	14	25	15	12	22	13	11	20	11	9	17	10	8
		27-45	Interior	29	29	29	29	29	29	29	29	29	29	29	29	29	29	29	29	29	29	29	29	29	29	29	29	28	28	26	27	27	23	26	25	20	24	22	17	22	20	15
			Exposed	29	29	29	29	29	29	29	29	29	29	29	29	29	29	29	29	29	26	29	29	24	28	25	20	24	22	17	21	19	15	18	16	13	16	14	11	14	13	10
	C	0-7	Interior	21	21	21	21	21	21	21	21	21	21	21	21	21	21	21	21	21	21	21	21	20	21	21	17	21	20	14	21	17	12	21	15	11	18	13	9	16	12	13
			Exposed	21	21	21	21	21	21	21	21	19	21	21	17	21	21	15	21	20	14	21	18	13	21	15	11	18	13	9	16	11	12	14	10	11	12	13	9	11	12	8
		7-20	Interior	21	21	21	21	21	21	21	21	21	21	21	21	21	21	21	21	21	19	21	21	17	21	20	15	21	17	12	20	15	11	17	13	9	15	11	13	14	10	11
			Exposed	21	21	21	21	21	18	21	21	17	21	20	15	21	18	13	21	17	12	21	15	11	18	13	9	15	11	12	13	9	11	11	13	9	10	11	8	9	10	7
		20-27	Interior	25	25	25	25	25	25	25	25	25	25	25	25	25	25	25	25	25	23	25	25	21	25	21	18	25	18	15	24	16	13	23	14	11	21	12	10	18	11	9
			Exposed	25	25	25	25	25	22	25	24	20	25	22	18	25	20	16	25	18	15	25	16	14	24	14	11	20	12	10	18	10	8	15	9	11	14	12	10	12	11	9
		27-45	Interior	29	29	29	29	29	29	29	29	29	29	29	29	29	29	29	29	29	28	28	28	25	26	26	21	25	23	18	22	20	16	19	17	14	17	15	12	15	13	11
			Exposed	29	29	29	29	29	27	29	29	24	29	28	22	28	25	20	25	23	18	23	21	16	20	18	14	17	15	12	14	13	10	13	11	9	11	10	12	10	9	11
	D	0-7	Interior	23	23	23	23	23	23	23	23	23	23	23	22	23	23	20	23	23	18	23	23	16	23	20	14	23	17	12	20	14	10	17	13	9	15	11	12	13	10	10
			Exposed	23	23	20	23	23	17	23	22	16	23	20	14	23	18	13	23	16	12	21	15	11	17	13	9	15	11	12	13	9	10	11	12	9	10	11	8	9	10	7
		7-20	Interior	23	23	23	23	23	23	23	23	21	23	23	19	23	23	17	23	21	16	23	19	14	23	16	12	19	14	10	17	12	9	15	11	12	13	9	10	11	13	9
			Exposed	23	23	17	23	21	15	23	19	14	23	17	12	21	15	11	19	14	10	17	13	9	15	11	12	13	9	10	11	12	9	9	10	8	8	9	7	11	8	6
		20-27	Interior	27	27	27	27	27	27	27	27	26	27	27	23	27	25	21	27	23	19	27	21	17	26	18	15	25	15	13	23	13	11	20	11	9	17	10	8	15	9	11
			Exposed	27	25	21	27	23	19	27	20	17	27	18	15	27	16	14	26	15	12	24	14	11	20	12	9	17	10	12	15	8	11	13	11	9	11	10	8	10	9	7
		27-45	Interior	31	31	31	31	31	31	31	31	31	31	31	28	30	30	25	29	29	23	28	26	21	25	22	18	21	19	15	18	17	13	16	14	11	14	13	10	13	11	9
			Exposed	31	31	25	31	28	22	28	25	20	26	23	18	23	21	16	21	19	15	19	17	14	16	15	11	14	12	10	12	11	8	10	9	11	9	13	10	12	11	9

* Cells with an astrisks indicates that the L-foot must be oriented in the Y- direction as indicated in the image.

10 Highlighted cell indicate 3-rail system span. Contact Unirac Engineering Services for support.

~~10~~ Highlighted cell with strikethrough indicate 3-rail system span and module clamp allowable capacity exceeds with 3-rails. 4-Rail system required. Contact Unirac Engineering Services for support.

UNIRAC

ASCE 7-22	II	30 ft	Ss = 1.25	23 sq.ft	LANDSCAPE	CROSS-SLOPE	NXT	NXT COMBO	Stronghold BUTYL OSB
Design Standard	Risk Category	Roof Height	Seismic	Module Area	Orientation	Rail Direction	Rail Type	Clamp	Attachment

SPAN TABLES

Maximum Allowable Rail Spans for Rooftop Solar Panels Parallel to the Roof Surface (inches)

Ground Snow Load (psf)	Wind Exposure Category	Roof Tilt Angle (deg)	Panel Exposure	Basic Wind Speed (mph)																																						
				90			95			100			105			110			115			120			130			140			150			160			170			180		
				Roof Wind Zone																																						
				1	2	3	1	2	3	1	2	3	1	2	3	1	2	3	1	2	3	1	2	3	1	2	3	1	2	3	1	2	3	1	2	3	1	2	3	1	2	3
60	B	0-7	Interior	18	18	18	18	18	18	18	18	18	18	18	18	18	18	18	18	18	18	18	18	18	18	18	18	18	18	18	18	18	18	18	18	15	18	18	14	18	17	12
			Exposed	18	18	18	18	18	18	18	18	18	18	18	18	18	18	18	18	18	18	18	18	18	18	18	16	18	18	13	18	16	12	18	14	10	17	13	9	15	11	12
		7-20	Interior	18	18	18	18	18	18	18	18	18	18	18	18	18	18	18	18	18	18	18	18	18	18	18	18	18	18	18	18	18	16	18	18	14	18	16	12	18	14	11
			Exposed	18	18	18	18	18	18	18	18	18	18	18	18	18	18	18	18	18	18	18	18	16	18	18	14	18	16	12	18	14	10	17	12	9	15	11	12	13	9	10
		20-27	Interior	22	22	22	22	22	22	22	22	22	22	22	22	22	22	22	22	22	22	22	22	22	22	22	22	22	22	22	22	22	19	22	20	16	22	18	14	21	16	13
			Exposed	22	22	22	22	22	22	22	22	22	22	22	22	22	22	22	22	22	22	22	22	20	22	20	17	22	17	14	22	15	12	22	13	11	20	11	9	17	10	8
		27-45	Interior	26	26	26	26	26	26	26	26	26	26	26	26	26	26	26	26	26	26	26	26	26	26	26	26	25	25	25	24	24	23	23	23	20	22	22	17	21	20	15
			Exposed	26	26	26	26	26	26	26	26	26	26	26	26	26	26	26	26	26	26	26	26	24	26	25	20	24	22	17	21	19	15	18	16	13	16	14	11	14	13	10
	C	0-7	Interior	18	18	18	18	18	18	18	18	18	18	18	18	18	18	18	18	18	18	18	18	18	18	18	17	18	18	14	18	17	12	18	15	11	18	13	9	16	12	13
			Exposed	18	18	18	18	18	18	18	18	18	18	17	18	18	15	18	18	14	18	18	13	18	15	11	18	13	9	16	11	12	14	10	11	12	13	9	11	12	8
		7-20	Interior	18	18	18	18	18	18	18	18	18	18	18	18	18	18	18	18	18	18	18	18	17	18	18	15	18	17	12	18	15	11	17	13	9	15	11	13	14	10	11
			Exposed	18	18	18	18	18	18	18	18	17	18	18	15	18	18	13	18	17	12	18	15	11	18	13	9	15	11	12	13	9	11	11	13	9	10	11	8	9	10	7
		20-27	Interior	22	22	22	22	22	22	22	22	22	22	22	22	22	22	22	22	22	22	22	22	21	22	21	18	22	18	15	21	16	13	20	14	11	20	12	10	18	11	9
			Exposed	22	22	22	22	22	22	22	22	20	22	22	18	22	20	16	22	18	15	22	16	14	22	14	11	20	12	10	18	10	8	15	9	11	14	12	10	12	11	9
		27-45	Interior	26	26	26	26	26	26	26	26	26	26	26	26	26	26	26	26	26	26	25	25	25	24	24	21	23	23	18	21	20	16	19	17	14	17	15	12	15	13	11
			Exposed	26	26	26	26	26	26	26	26	24	26	26	22	26	25	20	25	23	18	23	21	16	20	18	14	17	15	12	14	13	10	13	11	9	11	10	12	10	9	11
	D	0-7	Interior	20	20	20	20	20	20	20	20	20	20	20	20	20	20	20	20	20	18	20	20	16	20	20	14	20	17	12	20	14	10	17	13	9	15	11	12	13	10	10
			Exposed	20	20	20	20	20	17	20	20	16	20	20	14	20	18	13	20	16	12	20	15	11	17	13	9	15	11	12	13	9	10	11	12	9	10	11	8	9	10	7
		7-20	Interior	20	20	20	20	20	20	20	20	20	20	20	19	20	20	17	20	20	16	20	19	14	20	16	12	19	14	10	17	12	9	15	11	12	13	9	10	11	13	9
			Exposed	20	20	17	20	20	15	20	19	14	20	17	12	20	15	11	19	14	10	17	13	9	15	11	12	13	9	10	11	12	9	9	10	8	8	9	7	11	8	6
		20-27	Interior	24	24	24	24	24	24	24	24	24	24	24	23	24	24	21	24	23	19	24	21	17	23	18	15	22	15	13	21	13	11	20	11	9	17	10	8	15	9	11
			Exposed	24	24	21	24	23	19	24	20	17	24	18	15	24	16	14	24	15	12	24	14	11	20	12	9	17	10	12	15	8	11	13	11	9	11	10	8	10	9	7
		27-45	Interior	28	28	28	28	28	28	28	28	28	28	28	28	27	27	25	26	26	23	25	25	21	24	22	18	21	19	15	18	17	13	16	14	11	14	13	10	13	11	9
			Exposed	28	28	25	28	28	22	28	25	20	26	23	18	23	21	16	21	19	15	19	17	14	16	15	11	14	12	10	12	11	8	10	9	11	9	13	10	12	11	9
70	B	0-7	Interior	15	15	15	15	15	15	15	15	15	15	15	15	15	15	15	15	15	15	15	15	15	15	15	15	15	15	15	15	15	15	15	15	15	15	15	14	15	15	12
			Exposed	15	15	15	15	15	15	15	15	15	15	15	15	15	15	15	15	15	15	15	15	15	15	15	15	15	15	13	15	15	12	15	14	10	15	13	9	15	11	12
		7-20	Interior	16	16	16	16	16	16	16	16	16	16	16	16	16	16	16	16	16	16	16	16	16	16	16	16	16	16	16	16	16	16	16	16	14	16	16	12	16	14	11
			Exposed	16	16	16	16	16	16	16	16	16	16	16	16	16	16	16	16	16	16	16	16	16	16	16	14	16	16	12	16	14	10	16	12	9	15	11	12	13	9	10
		20-27	Interior	19	19	19	19	19	19	19	19	19	19	19	19	19	19	19	19	19	19	19	19	19	19	19	19	19	19	19	19	19	19	19	19	16	19	18	14	19	16	13
			Exposed	19	19	19	19	19	19	19	19	19	19	19	19	19	19	19	19	19	19	19	19	19	19	19	17	19	17	14	19	15	12	19	13	11	19	11	9	17	10	8
		27-45	Interior	24	24	24	24	24	24	24	24	24	24	24	24	24	24	24	24	24	24	24	24	24	24	24	24	23	23	23	22	22	22	21	21	20	20	20	17	19	19	15
			Exposed	24	24	24	24	24	24	24	24	24	24	24	24	24	24	24	24	24	24	24	24	24	24	24	20	23	22	17	21	19	15	18	16	13	16	14	11	14	13	10
	C	0-7	Interior	15	15	15	15	15	15	15	15	15	15	15	15	15	15	15	15	15	15	15	15	15	15	15	15	15	15	14	15	15	12	15	15	11	15	13	9	15	12	13
			Exposed	15	15	15	15	15	15	15	15	15	15	15	15	15	15	15	15	14	15	15	15	13	15	15	11	15	13	9	15	11	12	14	10	11	12	13	9	11	12	8
		7-20	Interior	16	16	16	16	16	16	16	16	16	16	16	16	16	16	16	16	16	16	16	16	16	16	16	15	16	16	12	16	15	11	16	13	9	15	11	13	14	10	11
			Exposed	16	16	16	16	16	16	16	16	16	16	15	16	16	13	16	16	12	16	15	11	16	13	9	15	11	12	13	9	11	11	13	9	10	11	8	9	10	7
		20-27	Interior	19	19	19	19	19	19	19	19	19	19	19	19	19	19	19	19	19	19	19	19	19	19	19	18	19	18	15	19	16	13	18	14	11	18	12	10	17	11	9
			Exposed	19	19	19	19	19	19	19	19	19	19	18	19	19	16	19	18	15	19	16	14	19	14	11	19	12	10	18	10	8	15	9	11	14	12	10	12	11	9
		27-45	Interior	24	24	24	24	24	24	24	24	24	24	24	22	24	24	20	23	23	18	23	21	16	20	18	14	17	15	12	14	13	10	13	11	9	11	10	12	10	9	11
			Exposed	24	24	24	24	24	24	24	24	24	24	23	18	23	21	16	21	19	15	19	17	14	16	15	11	14	12	10	12	11	8	10	9	11	9	13	10	12	11	9
	D	0-7	Interior	17	17	17	17	17	17	17	17	17	17	17	17	17	17	17	17	17	17	17	17	16	17	17	14	17	17	12	17	14	10	17	13	9	15	11	12	13	10	10
			Exposed	17	17	17	17	17	17	17	17	16	17	17	14	17	17	13	17	16	12	17	15	11	17	13	9	15	11	12	13	9	10	11	12	9	10	11	8	9	10	7
		7-20	Interior	17	17	17	17	17	17	17	17	17	17	17	17	17	17	17	17	17	16	17	17	14	17	16	12	17	14	10	17	12	9	15	11	12	13	9	10	11	13	9
			Exposed	17	17	17	17	17	15	17	17	14	17	17	12	17	15	11	17	14	10	17	13	9	15	11	12	13	9	10	11	12	9	9	10	8	8	9	7	11	8	6
		20-27	Interior	21	21	21	21	21	21	21	21	21	21	21	21	21	21	21	21	21	19	21	21	17	21	18	15	20	15	13	19	13	11	19	11	9	17	10	8	15	9	11
			Exposed	21	21	21	21	21	19	21	20	17	21	18	15	21	16	14	21	15	12	21	14	11	20	12	9	17	10	12	15	8	11	13	11	9	11	10	8	10	9	7
		27-45	Interior	25	25	25	25	25	25	25	25	25	25	25	25	24	24	24	24	24	23	23	23	21	22	22	18	20	19	15	18	17	13	16	14	11	14	13	10	13	11	9
			Exposed	25	25	25	25	25	22	25	25	20	25	23	18	23	21	16	21	19	15	19	17	14	16	15	11	14	12	10	12	11	8	10	9	11	9	13	10	12	11	9
80	B	0-7	Interior	13	13	13	13	13	13	13	13	13	13	13	13	13	13	13	13	13	13	13	13	13	13	13	13	13	13	13	13	13	13	13	13	13	13	13	13	13	13	12
			Exposed	13	13	13	13	13	13	13	13	13	13	13	13	13	13	13	13	13	13	13	13	13	13	13	13	13	13	13	13	13	12	13	13	10	13	13	9	13	11	12
		7-20	Interior	14	14	14	14	14	14	14	14	14	14	14	14	14	14	14	14	14	14	14	14	14	14	14	14	14	14	14	14	14	14	14	14	14	14	14	12	14	14	11
			Exposed	14	14	14	14	14	14	14	14	14	14	14	14	14	14	14	14	14	14	14	14	14	14	14	14	14	14	12	14	14	10	14	12	9	14	11	12	13	9	10
		20-27	Interior	17	17	17	17	17	17	17	17	17	17	17	17	17	17	17	17	17	17	17	17	17	17	17	17	17	17	17	17	17	17	17	17	16	17	17	14	17	16	13
			Exposed	17	17	17	17	17	17	17	17	17	17	17	17	17	17	17	17	17	17	17	17	17	17	17	17	17	17	14	17	15	12	17	13	11	17	11	9	17	10	8
		27-45	Interior	21	21	21	21	21	21	21	21	21	21	21	21	21	21	21	21	21	21	21	21	21	21	21	21	21	21	21	20	20	20	20	20	20	19	19	17	18	18	15
			Exposed	21	21	21	21	21	21	21	21	21	21	21	21	21	21	21	21	21	21	21	21	21	21	21	20	21	21	17	20	19	15	18	16	13	16	14	11	14	13	10
	C	0-7	Interior	13	13	13	13	13	13	13	13	13	13	13	13	13	13	13	13	13	13	13	13	13	13	13	13	13	13	13	13	13	12	13	13	11	13	13	9	13	12	13
			Exposed	13	13	13	13	13	13	13	13	13	13	13	13	13	13	13	13	13	13	13	13	13	13	13	13	13	13	9	13	11	12	13	10	11	12	13	9	11	12	8
		7-20	Interior	14	14	14	14	14	14	14	14	14	14	14	14	14	14	14	14	14	14	14	14	14	14	14	14	14	14	12	14	14	11	14	13	9	14	11	13	13	10	11
			Exposed	14	14	14	14	14	14	14	14	14	14	14	14	14	13	14	14	12	14	14	11	14	13	9	14	11	12	13	9	11	11	13	9	10	11	8	9	10	7
		20-27	Interior	17	17	17	17	17	17	17	17	17	17	17	17	17	17	17	17	17	17	17	17	17	17	17	15	17	16	13	17	14	11	16	12	10	16	11	9
			Exposed	17	17	17	17	17	17	17	17	17	17	17	17	17	16	17	17	15	17	16	14	17	14	11	17	12	10	17	10	8	15	9	11	14	12	10	12	11	9
		27-45	Interior	21	21	21	21	21	21	21	21	21	21	21	21	21	21	21	21	21	21	21	21	21	20	20	20	19	19	18	18	18	16	17	17	14	16	15	12	15	13	11
			Exposed	21	21	21	21	21	21	21	21	21	21	21	21	21	20	21	21	18	21	21	16	20	18	14	17	15	12	14	13	10	13	11	9	11	10	12	10	9	11
	D	0-7	Interior	15	15	15	15	15	15	15	15	15	15	15	15	15	15	15	15	15	15	15	15	15	15	15	14	15	15	12	15	14	10	15	13	9	15	11	12	13	10	10
			Exposed	15	15	15	15	15	15	15	15	15	15	14	15	15	13	15	15	12	15	15	11	15	13	9	15	11	12	13	9	10	11	12	9	10	11	8	9	10	7
		7-20	Interior	15	15	15	15	15	15	15	15	15	15	15	15	15	15	15	15	15	15	15	14	15	15	12	15	14	10	15	12	9	15	11	12	13	9	10	11	13	9
			Exposed	15	15	15	15	15	15	15	15	14	15	15	12	15	15	11	15	14	10	15	13	9	15	11	12	13	9	10	11	12	9	9	10	8	8	9	7	11	8	6
		20-27	Interior	19	19	19	19	19	19	19	19	19	19	19	19	19	19	19	19	19	19	19	17	19	18	15	18	15	13	18	13	11	17	11	9	16	10	8	15	9	11
			Exposed	19	19	19	19	19	19	19	19	17	19	18	15	19	16	14	19	15	12	19	14	11	19	12	9	17	10	12	15	8	11	13	11	9	11	10	8	10	9	7
		27-45	Interior	23	23	23	23	23	23	23	23	23	23	23	23	22	22	22	22	22	22	21	21	21	20	20	18	19	19	15	18	17	13	16	14	11	14	13	10	13	11	9
			Exposed	23	23	23	23	23	22	23	23	20	23	23	18	22	21	16	21	19	15	19	17	14	16	15	11	14	12	10	12	11	8	10	9	11	9	13	10	12	11	9

* Cells with an astrisks indicates that the L-foot must be oriented in the Y- direction as indicated in the image.

10 Highlighted cell indicate 3-rail system span. Contact Unirac Engineering Services for support.

~~10~~ Highlighted cell with strikethrough indicate 3-rail system span and module clamp allowable capacity exceeds with 3-rails. 4-Rail system required. Contact Unirac Engineering Services for support.

UNIRAC

ASCE 7-22	II	30 ft	Ss = 1.25	23 sq.ft	LANDSCAPE	CROSS-SLOPE	NXT	NXT COMBO	Stronghold BUTYL OSB
Design Standard	Risk Category	Roof Height	Seismic	Module Area	Orientation	Rail Direction	Rail Type	Clamp	Attachment

SPAN TABLES

Maximum Allowable Rail Spans for Rooftop Solar Panels Parallel to the Roof Surface (inches)

Ground Snow Load (psf)	Wind Exposure Category	Roof Tilt Angle (deg)	Panel Exposure	Basic Wind Speed (mph)																																						
				90			95			100			105			110			115			120			130			140			150			160			170			180		
				Roof Wind Zone																																						
				1	2	3	1	2	3	1	2	3	1	2	3	1	2	3	1	2	3	1	2	3	1	2	3	1	2	3	1	2	3	1	2	3	1	2	3	1	2	3
90	B	0-7	Interior	12	12	12	12	12	12	12	12	12	12	12	12	12	12	12	12	12	12	12	12	12	12	12	12	12	12	12	12	12	12	12	12	12	12	12	12	12	12	12
			Exposed	12	12	12	12	12	12	12	12	12	12	12	12	12	12	12	12	12	12	12	12	12	12	12	12	12	12	12	12	12	12	12	12	10	12	12	9	12	11	12
		7-20	Interior	12	12	12	12	12	12	12	12	12	12	12	12	12	12	12	12	12	12	12	12	12	12	12	12	12	12	12	12	12	12	12	12	12	12	12	12	12	12	11
			Exposed	12	12	12	12	12	12	12	12	12	12	12	12	12	12	12	12	12	12	12	12	12	12	12	12	12	12	12	12	12	10	12	12	9	12	11	12	12	9	10
		20-27	Interior	15	15	15	15	15	15	15	15	15	15	15	15	15	15	15	15	15	15	15	15	15	15	15	15	15	15	15	15	15	15	15	15	15	15	15	14	15	15	13
			Exposed	15	15	15	15	15	15	15	15	15	15	15	15	15	15	15	15	15	15	15	15	15	15	15	15	15	15	14	15	15	12	15	13	11	15	11	9	15	10	8
		27-45	Interior	19	19	19	19	19	19	19	19	19	19	19	19	19	19	19	19	19	19	19	19	19	19	19	19	19	19	19	19	19	19	18	18	18	17	17	17	17	17	15
			Exposed	19	19	19	19	19	19	19	19	19	19	19	19	19	19	19	19	19	19	19	19	19	19	19	19	19	19	17	19	19	15	18	16	13	16	14	11	14	13	10
	C	0-7	Interior	12	12	12	12	12	12	12	12	12	12	12	12	12	12	12	12	12	12	12	12	12	12	12	12	12	12	12	12	12	12	12	12	11	12	12	9	12	12	13
			Exposed	12	12	12	12	12	12	12	12	12	12	12	12	12	12	12	12	12	12	12	12	12	12	12	12	12	12	9	12	11	12	12	10	11	12	13	9	11	12	8
		7-20	Interior	12	12	12	12	12	12	12	12	12	12	12	12	12	12	12	12	12	12	12	12	12	12	12	12	12	12	12	12	12	11	12	12	9	12	11	13	12	10	11
			Exposed	12	12	12	12	12	12	12	12	12	12	12	12	12	12	12	12	12	12	12	12	11	12	12	9	12	11	12	12	9	11	11	13	9	10	11	8	9	10	7
		20-27	Interior	15	15	15	15	15	15	15	15	15	15	15	15	15	15	15	15	15	15	15	15	15	15	15	15	15	15	15	15	15	13	15	14	11	15	12	10	14	11	9
			Exposed	15	15	15	15	15	15	15	15	15	15	15	15	15	15	15	15	15	15	15	15	14	15	14	11	15	12	10	15	10	8	15	9	11	14	12	10	12	11	9
		27-45	Interior	19	19	19	19	19	19	19	19	19	19	19	19	19	19	19	19	19	19	19	19	19	18	18	18	18	18	18	17	17	16	16	16	14	15	15	12	15	13	11
			Exposed	19	19	19	19	19	19	19	19	19	19	19	19	19	19	19	19	19	18	19	19	16	18	18	14	17	15	12	14	13	10	13	11	9	11	10	12	10	9	11
	D	0-7	Interior	13	13	13	13	13	13	13	13	13	13	13	13	13	13	13	13	13	13	13	13	13	13	13	13	13	13	12	13	13	10	13	13	9	13	11	12	13	10	10
			Exposed	13	13	13	13	13	13	13	13	13	13	13	13	13	13	13	13	13	12	13	13	11	13	13	9	13	11	12	13	9	10	11	12	9	10	11	8	9	10	7
		7-20	Interior	14	14	14	14	14	14	14	14	14	14	14	14	14	14	14	14	14	14	14	14	14	14	14	12	14	14	10	14	12	9	14	11	12	13	9	10	11	13	9
			Exposed	14	14	14	14	14	14	14	14	14	14	14	12	14	14	11	14	14	10	14	13	9	14	11	12	13	9	10	11	12	9	9	10	8	8	9	7	11	8	6
		20-27	Interior	17	17	17	17	17	17	17	17	17	17	17	17	17	17	17	17	17	17	17	17	17	17	17	15	17	15	13	16	13	11	16	11	9	15	10	8	15	9	11
			Exposed	17	17	17	17	17	17	17	17	17	17	17	15	17	16	14	17	15	12	17	14	11	17	12	9	17	10	12	15	8	11	13	11	9	11	10	8	10	9	7
		27-45	Interior	21	21	21	21	21	21	21	21	21	21	21	21	21	21	21	20	20	20	20	20	20	19	19	18	18	18	15	17	17	13	16	14	11	14	13	10	13	11	9
			Exposed	21	21	21	21	21	21	21	21	20	21	21	18	21	21	16	20	19	15	19	17	14	16	15	11	14	12	10	12	11	8	10	9	11	9	13	10	12	11	9
100	B	0-7	Interior	11	11	11	11	11	11	11	11	11	11	11	11	11	11	11	11	11	11	11	11	11	11	11	11	11	11	11	11	11	11	11	11	11	11	11	11	11	11	11
			Exposed	11	11	11	11	11	11	11	11	11	11	11	11	11	11	11	11	11	11	11	11	11	11	11	11	11	11	11	11	11	11	11	11	10	11	11	9	11	11	12
		7-20	Interior	11	11	11	11	11	11	11	11	11	11	11	11	11	11	11	11	11	11	11	11	11	11	11	11	11	11	11	11	11	11	11	11	11	11	11	11	11	11	11
			Exposed	11	11	11	11	11	11	11	11	11	11	11	11	11	11	11	11	11	11	11	11	11	11	11	11	11	11	11	11	11	10	11	11	9	11	11	12	11	9	10
		20-27	Interior	14	14	14	14	14	14	14	14	14	14	14	14	14	14	14	14	14	14	14	14	14	14	14	14	14	14	14	14	14	14	14	14	14	14	14	14	14	14	13
			Exposed	14	14	14	14	14	14	14	14	14	14	14	14	14	14	14	14	14	14	14	14	14	14	14	14	14	14	14	14	14	12	14	13	11	14	11	9	14	10	8
		27-45	Interior	17	17	17	17	17	17	17	17	17	17	17	17	17	17	17	17	17	17	17	17	17	17	17	17	17	17	17	17	17	17	17	17	17	16	16	16	16	16	15
			Exposed	17	17	17	17	17	17	17	17	17	17	17	17	17	17	17	17	17	17	17	17	17	17	17	17	17	17	17	17	17	15	17	16	13	16	14	11	14	13	10
	C	0-7	Interior	11	11	11	11	11	11	11	11	11	11	11	11	11	11	11	11	11	11	11	11	11	11	11	11	11	11	11	11	11	11	11	11	11	11	11	9	11	11	13
			Exposed	11	11	11	11	11	11	11	11	11	11	11	11	11	11	11	11	11	11	11	11	11	11	11	9	11	11	12	11	11	12	11	10	11	11	13	9	11	12	8
		7-20	Interior	11	11	11	11	11	11	11	11	11	11	11	11	11	11	11	11	11	11	11	11	11	11	11	11	11	11	11	11	11	11	11	11	9	11	11	13	11	10	11
			Exposed	11	11	11	11	11	11	11	11	11	11	11	11	11	11	11	11	11	11	11	11	11	11	11	9	11	11	12	11	9	11	11	13	9	10	11	8	9	10	7
		20-27	Interior	14	14	14	14	14	14	14	14	14	14	14	14	14	14	14	14	14	14	14	14	14	14	14	14	14	14	14	14	14	13	14	14	11	14	12	10	13	11	9
			Exposed	14	14	14	14	14	14	14	14	14	14	14	14	14	14	14	14	14	14	14	14	14	14	14	11	14	12	10	14	10	8	14	9	11	14	12	10	12	11	9
		27-45	Interior	17	17	17	17	17	17	17	17	17	17	17	17	17	17	17	17	17	17	17	17	17	17	17	17	16	16	16	16	16	16	15	15	14	14	14	12	14	13	11
			Exposed	17	17	17	17	17	17	17	17	17	17	17	17	17	17	17	17	17	17	17	17	16	17	17	14	16	15	12	14	13	10	13	11	9	11	10	12	10	9	11
	D	0-7	Interior	12	12	12	12	12	12	12	12	12	12	12	12	12	12	12	12	12	12	12	12	12	12	12	12	12	12	12	12	12	10	12	12	9	12	11	12	12	10	10
			Exposed	12	12	12	12	12	12	12	12	12	12	12	12	12	12	12	12	12	12	12	12	11	12	12	9	12	11	12	12	9	10	11	12	9	10	11	8	9	10	7
		7-20	Interior	12	12	12	12	12	12	12	12	12	12	12	12	12	12	12	12	12	12	12	12	12	12	12	12	12	12	10	12	12	9	12	11	12	12	9	10	11	13	9
			Exposed	12	12	12	12	12	12	12	12	12	12	12	12	12	12	11	12	12	10	12	12	9	12	11	12	12	9	10	11	12	9	9	10	8	8	9	7	11	8	6
		20-27	Interior	15	15	15	15	15	15	15	15	15	15	15	15	15	15	15	15	15	15	15	15	15	15	15	15	15	15	13	15	13	11	15	11	9	14	10	8	14	9	11
			Exposed	15	15	15	15	15	15	15	15	15	15	15	15	15	15	14	15	15	12	15	14	11	15	12	9	15	10	12	15	8	11	13	11	9	11	10	8	10	9	7
		27-45	Interior	19	19	19	19	19	19	19	19	19	19	19	19	19	19	19	19	19	19	18	18	18	17	17	17	17	17	15	16	16	13	15	14	11	14	13	10	13	11	9
			Exposed	19	19	19	19	19	19	19	19	19	19	19	18	19	19	16	19	19	15	18	17	14	16	15	11	14	12	10	12	11	8	10	9	11	9	13	10	12	11	9

*	Cells with an astrisks indicates that the L-foot must be oriented in the Y- direction as indicated in the image.
10	Highlighted cell indicate 3-rail system span. Contact Unirac Engineering Services for support.
~~10~~	Highlighted cell with strikethrough indicate 3-rail system span and module clamp allowable capacity exceeds with 3-rails. 4-Rail system required. Contact Unirac Engineering Services for support.

UNIRAC

ASCE 7-22	II	30 ft	Ss = 3.00	19 sq.ft	PORTRAIT	CROSS-SLOPE	NXT	NXT COMBO	Stronghold BUTYL OSB
Design Standard	Risk Category	Roof Height	Seismic	Module Area	Orientation	Rail Direction	Rail Type	Clamp	Attachment

SPAN TABLES

Maximum Allowable Rail Spans for Rooftop Solar Panels Parallel to the Roof Surface (inches)

Ground Snow Load (psf)	Wind Exposure Category	Roof Tilt Angle (deg)	Panel Exposure	Basic Wind Speed (mph)																																								
				90			95			100			105			110			115			120			130			140			150			160			170			180		
				Roof Wind Zone																																								
				1	2	3	1	2	3	1	2	3	1	2	3	1	2	3	1	2	3	1	2	3	1	2	3	1	2	3	1	2	3	1	2	3	1	2	3	1	2	3
0	B	0-7	Interior	34	34	33	34	34	29	34	34	26	34	34	23	34	30	21	34	27	19	34	25	17	29	21	15	25	18	12	21	15	11	18	13	9	16	12	8	14	10	7
			Exposed	34	30	21	34	27	19	33	24	17	30	21	15	27	19	13	24	17	12	22	16	11	19	13	9	16	11	8	14	10	7	12	9	6	10	7	5	9	7	7
		7-20	Interior	34	34	29	34	34	25	34	31	23	34	28	20	34	25	18	32	23	17	29	21	15	24	17	13	21	15	11	18	13	9	15	11	8	13	10	7	12	9	6
			Exposed	34	25	18	31	22	16	28	20	15	25	18	13	22	16	12	20	15	11	19	13	10	16	11	8	13	10	7	11	8	6	10	7	5	9	6	7	8	6	6
		20-27	Interior	35	35	35	35	35	31	35	34	28	35	30	25	35	27	22	35	25	20	35	23	18	33	19	16	28	16	13	24	14	11	21	12	10	18	11	9	16	9	8
			Exposed	35	27	22	35	24	20	35	22	18	34	19	16	31	17	14	28	16	13	25	14	12	21	12	10	18	10	9	16	9	7	14	8	6	12	7	6	10	6	5
		27-45	Interior	35	35	35	35	35	35	35	35	33	35	35	30	35	34	27	35	31	24	32	28	22	27	24	19	23	20	16	20	17	14	17	15	12	15	13	10	13	12	9
			Exposed	35	34	27	34	30	24	30	27	21	27	24	19	25	22	17	22	20	16	20	18	14	17	15	12	15	13	10	13	11	9	11	10	8	10	9	7	9	8	6
	C	0-7	Interior	34	32	22	34	28	20	34	25	18	32	23	16	29	20	14	26	19	13	24	17	12	20	14	10	17	12	8	14	10	7	13	9	6	11	8	5	10	7	5
			Exposed	28	20	14	25	18	13	23	16	11	20	15	10	18	13	9	17	12	8	15	11	8	13	9	6	11	8	5	9	7	7	8	6	6	7	5	5	6	7	5
		7-20	Interior	34	27	19	33	24	17	29	21	15	26	19	14	24	17	13	22	16	11	20	14	10	16	12	9	14	10	7	12	9	6	10	8	6	9	7	5	8	6	7
			Exposed	24	17	12	21	15	11	19	14	10	17	12	9	15	11	8	14	10	7	13	9	7	11	8	6	9	7	5	8	6	6	7	5	5	6	7	5	5	6	4
		20-27	Interior	35	29	24	35	26	21	35	23	19	35	21	17	33	19	15	29	17	14	27	15	13	22	13	11	19	11	9	16	9	8	14	8	7	13	7	6	11	6	5
			Exposed	32	18	15	29	16	13	26	15	12	23	13	11	21	12	10	19	11	9	17	10	8	14	8	7	12	7	6	11	6	5	9	5	7	8	7	6	7	6	5
		27-45	Interior	35	35	28	35	32	25	32	29	22	29	26	20	26	23	18	24	21	17	22	19	15	18	16	13	16	14	11	13	12	9	12	10	8	10	9	7	9	8	6
			Exposed	26	23	18	23	21	16	21	18	15	19	17	13	17	15	12	15	14	11	14	12	10	12	11	8	10	9	7	9	8	6	8	7	5	7	6	7	6	5	6
	D	0-7	Interior	34	26	18	33	23	16	29	21	14	26	19	13	24	17	12	21	15	11	19	14	10	16	12	8	14	10	7	12	9	6	10	7	5	9	7	7	8	6	6
			Exposed	23	17	12	21	15	10	19	13	9	17	12	8	15	11	8	14	10	7	12	9	6	10	8	5	9	6	7	8	5	6	7	5	5	6	6	4	5	6	4
		7-20	Interior	31	22	16	27	19	14	24	17	13	22	16	11	20	14	10	18	13	9	16	12	9	14	10	7	12	8	6	10	7	5	9	6	7	8	5	6	7	5	5
			Exposed	20	14	10	17	13	9	16	11	8	14	10	7	13	9	7	11	8	6	10	8	5	9	6	7	7	5	6	6	7	5	6	6	5	5	5	4	7	5	3
		20-27	Interior	35	24	19	35	21	17	33	19	15	30	17	14	27	15	13	24	14	11	22	13	10	19	11	9	16	9	7	14	8	6	12	7	6	10	6	5	9	5	7
			Exposed	27	15	13	24	14	11	21	12	10	19	11	9	17	10	8	16	9	7	14	8	7	12	7	6	10	6	5	9	5	6	8	7	6	7	6	5	6	5	4
		27-45	Interior	33	30	23	30	26	21	27	24	19	24	21	17	22	19	15	20	18	14	18	16	13	15	13	11	13	11	9	11	10	8	10	9	7	8	8	6	7	7	5
			Exposed	21	19	15	19	17	13	17	15	12	15	14	11	14	12	10	13	11	9	12	10	8	10	9	7	8	7	6	7	6	5	6	6	7	5	5	6	5	7	5
10	B	0-7	Interior	28	28	28	28	28	28	28	28	26	28	28	23	28	28	21	28	27	19	28	25	17	28	21	15	25	18	12	21	15	11	18	13	9	16	12	8	14	10	7
			Exposed	28	28	21	28	27	19	28	24	17	28	21	15	27	19	13	24	17	12	22	16	11	19	13	9	16	11	8	14	10	7	12	9	6	10	7	5	9	7	7
		7-20	Interior	28	28	28	28	28	25	28	28	23	28	28	20	28	25	18	28	23	17	28	21	15	24	17	13	21	15	11	18	13	9	15	11	8	13	10	7	12	9	6
			Exposed	28	25	18	28	22	16	28	20	15	25	18	13	22	16	12	20	15	11	19	13	10	16	11	8	13	10	7	11	8	6	10	7	5	9	6	7	8	6	6
		20-27	Interior	32	32	32	32	32	31	32	32	28	32	30	25	32	27	22	32	25	20	32	23	18	32	19	16	28	16	13	24	14	11	21	12	10	18	11	9	16	9	8
			Exposed	32	27	22	32	24	20	32	22	18	32	19	16	31	17	14	28	16	13	25	14	12	21	12	10	18	10	9	16	9	7	14	8	6	12	7	6	10	6	5
		27-45	Interior	34	34	34	34	34	34	34	34	33	34	34	30	34	34	27	34	31	24	32	28	22	27	24	19	23	20	16	20	17	14	17	15	12	15	13	10	13	12	9
			Exposed	34	34	27	34	30	24	30	27	21	27	24	19	25	22	17	22	20	16	20	18	14	17	15	12	15	13	10	13	11	9	11	10	8	10	9	7	9	8	6
	C	0-7	Interior	28	28	22	28	28	20	28	25	18	28	23	16	28	20	14	26	19	13	24	17	12	20	14	10	17	12	8	14	10	7	13	9	6	11	8	5	10	7	5
			Exposed	28	20	14	25	18	13	23	16	11	20	15	10	18	13	9	17	12	8	15	11	8	13	9	6	11	8	5	9	7	7	8	6	6	7	5	5	6	7	5
		7-20	Interior	28	27	19	28	24	17	28	21	15	26	19	14	24	17	13	22	16	11	20	14	10	16	12	9	14	10	7	12	9	6	10	8	6	9	7	5	8	6	7
			Exposed	24	17	12	21	15	11	19	14	10	17	12	9	15	11	8	14	10	7	13	9	7	11	8	6	9	7	5	8	6	6	7	5	5	6	7	5	5	6	4
		20-27	Interior	32	29	24	32	26	21	32	23	19	32	21	17	32	19	15	29	17	14	27	15	13	22	13	11	19	11	9	16	9	8	14	8	7	13	7	6	11	6	5
			Exposed	32	18	15	29	16	13	26	15	12	23	13	11	21	12	10	19	11	9	17	10	8	14	8	7	12	7	6	11	6	5	9	5	7	8	7	6	7	6	5
		27-45	Interior	34	34	28	34	32	25	32	29	22	29	26	20	26	23	18	24	21	17	22	19	15	18	16	13	16	14	11	13	12	9	12	10	8	10	9	7	9	8	6
			Exposed	26	23	18	23	21	16	21	18	15	19	17	13	17	15	12	15	14	11	14	12	10	12	11	8	10	9	7	9	8	6	8	7	5	7	6	7	6	5	6
	D	0-7	Interior	34	26	18	33	23	16	29	21	14	26	19	13	24	17	12	21	15	11	19	14	10	16	12	8	14	10	7	12	9	6	10	7	5	9	7	7	8	6	6
			Exposed	23	17	12	21	15	10	19	13	9	17	12	8	15	11	8	14	10	7	12	9	6	10	8	5	9	6	7	8	5	6	7	5	5	6	6	4	5	6	4
		7-20	Interior	31	22	16	27	19	14	24	17	13	22	16	11	20	14	10	18	13	9	16	12	9	14	10	7	12	8	6	10	7	5	9	6	7	8	5	6	7	5	5
			Exposed	20	14	10	17	13	9	16	11	8	14	10	7	13	9	7	11	8	6	10	8	5	9	6	7	7	5	6	6	7	5	6	6	5	5	5	4	7	5	3
		20-27	Interior	35	24	19	35	21	17	33	19	15	30	17	14	27	15	13	24	14	11	22	13	10	19	11	9	16	9	7	14	8	6	12	7	6	10	6	5	9	5	7
			Exposed	27	15	13	24	14	11	21	12	10	19	11	9	17	10	8	16	9	7	14	8	7	12	7	6	10	6	5	9	5	6	8	7	6	7	6	5	6	5	4
		27-45	Interior	33	30	23	30	26	21	27	24	19	24	21	17	22	19	15	20	18	14	18	16	13	15	13	11	13	11	9	11	10	8	10	9	7	8	8	6	7	7	5
			Exposed	21	19	15	19	17	13	17	15	12	15	14	11	14	12	10	13	11	9	12	10	8	10	9	7	8	7	6	7	6	5	6	6	7	5	5	6	5	7	5
20	B	0-7	Interior	20	20	20	20	20	20	20	20	20	20	20	20	20	20	20	20	20	19	20	20	17	20	20	15	20	18	12	20	15	11	18	13	9	16	12	8	14	10	7
			Exposed	20	20	20	20	20	19	20	20	17	20	20	15	20	19	13	20	17	12	20	16	11	19	13	9	16	11	8	14	10	7	12	9	6	10	7	5	9	7	7
		7-20	Interior	21	21	21	21	21	21	21	21	21	21	21	20	21	21	18	21	21	17	21	21	15	21	17	13	21	15	11	18	13	9	15	11	8	13	10	7	12	9	6
			Exposed	21	21	18	21	21	16	21	20	15	21	18	13	21	16	12	20	15	11	19	13	10	16	11	8	13	10	7	11	8	6	10	7	5	9	6	7	8	6	6
		20-27	Interior	25	25	25	25	25	25	25	25	25	25	25	25	25	25	22	25	25	20	25	23	18	25	19	16	25	16	13	24	14	11	21	12	10	18	11	9	16	9	8
			Exposed	25	25	22	25	24	20	25	22	18	25	19	16	25	17	14	25	16	13	25	14	12	21	12	10	18	10	9	16	9	7	14	8	6	12	7	6	10	6	5
		27-45	Interior	28	28	28	28	28	28	28	28	28	28	28	28	28	28	27	28	28	24	28	28	22	27	24	19	23	20	16	20	17	14	17	15	12	15	13	10	13	12	9
			Exposed	28	28	27	28	28	24	28	27	21	27	24	19	25	22	17	22	20	16	20	18	14	17	15	12	15	13	10	13	11	9	11	10	8	10	9	7	9	8	6
	C	0-7	Interior	20	20	20	20	20	20	20	20	18	20	20	16	20	20	14	20	19	13	20	17	12	20	14	10	17	12	8	14	10	7	13	9	6	11	8	5	10	7	5
			Exposed	20	20	14	20	18	13	20	16	11	20	15	10	18	13	9	17	12	8	15	11	8	13	9	6	11	8	5	9	7	7	8	6	6	7	5	5	6	7	5
		7-20	Interior	21	21	19	21	21	17	21	21	15	21	19	14	21	17	13	21	16	11	20	14	10	16	12	9	14	10	7	12	9	6	10	8	6	9	7	5	8	6	7
			Exposed	21	17	12	21	15	11	19	14	10	17	12	9	15	11	8	14	10	7	13	9	7	11	8	6	9	7	5	8	6	6	7	5	5	6	7	5	5	6	4
		20-27	Interior	25	25	24	25	25	21	25	23	19	25	21	17	25	19	15	25	17	14	25	15	13	22	13	11	19	11	9	16	9	8	14	8	7	13	7	6	11	6	5
			Exposed	25	18	15	25	16	13	25	15	12	23	13	11	21	12	10	19	11	9	17	10	8	14	8	7	12	7	6	11	6	5	9	5	7	8	7	6	7	6	5
		27-45	Interior	28	28	28	28	28	25	28	28	22	28	26	20	26	23	18	24	21	17	22	19	15	18	16	13	16	14	11	13	12	9	12	10	8	10	9	7	9	8	6
			Exposed	26	23	18	23	21	16	21	18	15	19	17	13	17	15	12	15	14	11	14	12	10	12	11	8	10	9	7	9	8	6	8	7	5	7	6	7	6	5	6
	D	0-7	Interior	20	20	18	20	20	16	20	20	14	20	19	13	20	17	12	20	15	11	19	14	10	16	12	8	14	10	7	12	9	6	10	7	5	9	7	7	8	6	6
			Exposed	20	17	12	20	15	10	19	13	9	17	12	8	15	11	8	14	10	7	12	9	6	10	8	5	9	6	7	8	5	6	7	5	5	6	6	4	5	6	4
		7-20	Interior	21	21	16	21	19	14	21	17	13	21	16	11	20	14	10	18	13	9	16	12	9	14	10	7	12	8	6	10	7	5	9	6	7	8	5	6	7	5	5
			Exposed	20	14	10	17	13	9	16	11	8	14	10	7	13	9	7	11	8	6	10	8	5	9	6	7	7	5	6	6	7	5	6	6	5	5	5	4	7	5	3
		20-27	Interior	26	24	19	26	21	17	26	19	15	26	17	14	26	15	13	24	14	11	22	13	10	19	11	9	16	9	7	14	8	6	12	7	6	10	6	5	9	5	7
			Exposed	26	15	13	24	14	11	21	12	10	19	11	9	17	10	8	16	9	7	14	8	7	12	7	6	10	6	5	9	5	6	8	7	6	7	6	5	6	5	4
		27-45	Interior	29	29	23	29	26	21	27	24	19	24	21	17	22	19	15	20	18	14	18	16	13	15	13	11	13	11	9	11	10	8	10	9	7	8	8	6	7	7	5
			Exposed	21	19	15	19	17	13	17	15	12	15	14	11	14	12	10	13	11	9	12	10	8	10	9	7	8	7	6	7	6	5	6	6	7	5	5	6	5	7	5

* Cells with an astrisks indicates that the L-foot must be oriented in the Y- direction as indicated in the image.

10 Highlighted cell indicate 3-rail system span. Contact Unirac Engineering Services for support.

~~10~~ Highlighted cell with strikethrough indicate 3-rail system span and module clamp allowable capacity exceeds with 3-rails. 4-Rail system required. Contact Unirac Engineering Services for support.

UNIRAC

ASCE 7-22	II	30 ft	Ss = 3.00	19 sq.ft	PORTRAIT	CROSS-SLOPE	NXT	NXT COMBO	Stronghold BUTYL OSB
Design Standard	Risk Category	Roof Height	Seismic	Module Area	Orientation	Rail Direction	Rail Type	Clamp	Attachment

SPAN TABLES

Maximum Allowable Rail Spans for Rooftop Solar Panels Parallel to the Roof Surface (inches)

Ground Snow Load (psf)	Wind Exposure Category	Roof Tilt Angle (deg)	Panel Exposure	Basic Wind Speed (mph)																																						
				90			95			100			105			110			115			120			130			140			150			160			170			180		
				Roof Wind Zone																																						
				1	2	3	1	2	3	1	2	3	1	2	3	1	2	3	1	2	3	1	2	3	1	2	3	1	2	3	1	2	3	1	2	3	1	2	3	1	2	3
30	B	0-7	Interior	16	16	16	16	16	16	16	16	16	16	16	16	16	16	16	16	16	16	16	16	16	16	16	15	16	16	12	16	15	11	16	13	9	16	12	8	14	10	7
			Exposed	16	16	16	16	16	16	16	16	16	16	16	15	16	16	13	16	16	12	16	16	11	16	13	9	16	11	8	14	10	7	12	9	6	10	7	5	9	7	7
		7-20	Interior	16	16	16	16	16	16	16	16	16	16	16	16	16	16	16	16	16	16	16	16	15	16	16	13	16	15	11	16	13	9	15	11	8	13	10	7	12	9	6
			Exposed	16	16	16	16	16	16	16	16	15	16	16	13	16	16	12	16	15	11	16	13	10	16	11	8	13	10	7	11	8	6	10	7	5	9	6	7	8	6	6
		20-27	Interior	21	21	21	21	21	21	21	21	21	21	21	21	21	21	21	21	21	20	21	21	18	21	19	16	21	16	13	21	14	11	21	12	10	18	11	9	16	9	8
			Exposed	21	21	21	21	21	20	21	21	18	21	19	16	21	17	14	21	16	13	21	14	12	21	12	10	18	10	9	16	9	7	14	8	6	12	7	6	10	6	5
		27-45	Interior	23	23	23	23	23	23	23	23	23	23	23	23	23	23	23	23	23	23	23	23	22	23	23	19	22	20	16	20	17	14	17	15	12	15	13	10	13	12	9
			Exposed	23	23	23	23	23	23	23	23	21	23	23	19	23	22	17	22	20	16	20	18	14	17	15	12	15	13	10	13	11	9	11	10	8	10	9	7	9	8	6
	C	0-7	Interior	16	16	16	16	16	16	16	16	16	16	16	16	16	16	14	16	16	13	16	16	12	16	14	10	16	12	8	14	10	7	13	9	6	11	8	5	10	7	5
			Exposed	16	16	14	16	16	13	16	16	11	16	15	10	16	13	9	16	12	8	15	11	8	13	9	6	11	8	5	9	7	7	8	6	6	7	5	5	6	7	5
		7-20	Interior	16	16	16	16	16	16	16	16	15	16	16	14	16	16	13	16	16	11	16	14	10	16	12	9	14	10	7	12	9	6	10	8	6	9	7	5	8	6	7
			Exposed	16	16	12	16	15	11	16	14	10	16	12	9	15	11	8	14	10	7	13	9	7	11	8	6	9	7	5	8	6	6	7	5	5	6	7	5	5	6	4
		20-27	Interior	21	21	21	21	21	21	21	21	19	21	21	17	21	19	15	21	17	14	21	15	13	21	13	11	19	11	9	16	9	8	14	8	7	13	7	6	11	6	5
			Exposed	21	18	15	21	16	13	21	15	12	21	13	11	21	12	10	19	11	9	17	10	8	14	8	7	12	7	6	11	6	5	9	5	7	8	7	6	7	6	5
		27-45	Interior	23	23	23	23	23	23	23	23	22	23	23	20	23	23	18	23	21	17	22	19	15	18	16	13	16	14	11	13	12	9	12	10	8	10	9	7	9	8	6
			Exposed	23	23	18	23	21	16	21	18	15	19	17	13	17	15	12	15	14	11	14	12	10	12	11	8	10	9	7	9	8	6	8	7	5	7	6	7	6	5	6
	D	0-7	Interior	16	16	16	16	16	16	16	16	14	16	16	13	16	16	12	16	15	11	16	14	10	16	12	8	14	10	7	12	9	6	10	7	5	9	7	7	8	6	6
			Exposed	16	16	12	16	15	10	16	13	9	16	12	8	15	11	8	14	10	7	12	9	6	10	8	5	9	6	7	8	5	6	7	5	5	6	6	4	5	6	4
		7-20	Interior	16	16	16	16	16	14	16	16	13	16	16	11	16	14	10	16	13	9	16	12	9	14	10	7	12	8	6	10	7	5	9	6	7	8	5	6	7	5	5
			Exposed	16	14	10	16	13	9	16	11	8	14	10	7	13	9	7	11	8	6	10	8	5	9	6	7	7	5	6	6	7	5	6	6	5	5	5	4	7	5	3
		20-27	Interior	22	22	19	22	21	17	22	19	15	22	17	14	22	15	13	22	14	11	22	13	10	19	11	9	16	9	7	14	8	6	12	7	6	10	6	5	9	5	7
			Exposed	22	15	13	22	14	11	21	12	10	19	11	9	17	10	8	16	9	7	14	8	7	12	7	6	10	6	5	9	5	6	8	7	6	7	6	5	6	5	4
		27-45	Interior	25	25	23	25	25	21	25	24	19	24	21	17	22	19	15	20	18	14	18	16	13	15	13	11	13	11	9	11	10	8	10	9	7	8	8	6	7	7	5
			Exposed	21	19	15	19	17	13	17	15	12	15	14	11	14	12	10	13	11	9	12	10	8	10	9	7	8	7	6	7	6	5	6	6	7	5	5	6	5	7	5
40	B	0-7	Interior	15	15	15	15	15	15	15	15	15	15	15	15	15	15	15	15	15	15	15	15	15	15	15	12	15	15	11	15	11	8	15	13	9	15	12	8	14	10	7
			Exposed	15	15	15	15	15	15	15	15	15	15	15	15	15	15	13	15	15	12	15	15	11	15	13	9	15	11	8	14	10	7	12	9	6	10	7	5	9	7	7
		7-20	Interior	15	15	15	15	15	15	15	15	15	15	15	15	15	15	15	15	15	15	15	15	15	15	15	13	15	15	11	15	13	9	15	11	8	13	10	7	12	9	6
			Exposed	15	15	15	15	15	15	15	15	15	15	15	13	15	15	12	15	15	11	15	13	10	15	11	8	13	10	7	11	8	6	10	7	5	9	6	7	8	6	6
		20-27	Interior	17	17	17	17	17	17	17	17	17	17	17	17	17	17	17	17	17	17	17	17	17	17	17	16	17	16	13	17	14	11	17	12	10	17	11	9	16	9	8
			Exposed	17	17	17	17	17	17	17	17	17	17	17	16	17	17	14	17	16	13	17	14	12	17	12	10	17	10	9	16	9	7	14	8	6	12	7	6	10	6	5
		27-45	Interior	20	20	20	20	20	20	20	20	20	20	20	20	20	20	20	20	20	20	20	20	20	20	20	19	20	20	16	18	17	14	17	15	12	15	13	10	13	12	9
			Exposed	20	20	20	20	20	20	20	20	20	20	20	19	20	20	17	20	20	16	20	18	14	17	15	12	15	13	10	13	11	9	11	10	8	10	9	7	9	8	6
	C	0-7	Interior	15	15	15	15	15	15	15	15	15	15	15	15	15	15	14	15	15	13	15	15	12	15	14	10	15	12	8	14	10	7	13	9	6	11	8	5	10	7	5
			Exposed	15	15	14	15	15	13	15	15	11	15	15	10	15	13	9	15	12	8	15	11	8	13	9	6	11	8	5	9	7	7	8	6	6	7	5	5	6	7	5
		7-20	Interior	15	15	15	15	15	15	15	15	15	15	15	14	15	15	13	15	15	11	15	14	10	15	12	9	14	10	7	12	9	6	10	8	6	9	7	5	8	6	7
			Exposed	15	15	12	15	15	11	15	14	10	15	12	9	15	11	8	14	10	7	13	9	7	11	8	6	9	7	5	8	6	6	7	5	5	6	7	5	5	6	4
		20-27	Interior	17	17	17	17	17	17	17	17	17	17	17	17	17	17	15	17	17	14	17	15	13	17	13	11	17	11	9	16	9	8	14	8	7	13	7	6	11	6	5
			Exposed	17	17	15	17	16	13	17	15	12	17	13	11	17	12	10	17	11	9	17	10	8	14	8	7	12	7	6	11	6	5	9	5	7	8	7	6	7	6	5
		27-45	Interior	20	20	20	20	20	20	20	20	20	20	20	20	20	20	18	20	20	17	19	19	15	18	16	13	16	14	11	13	12	9	12	10	8	10	9	7	9	8	6
			Exposed	20	20	18	20	20	16	20	18	15	19	17	13	17	15	12	15	14	11	14	12	10	12	11	8	10	9	7	9	8	6	8	7	5	7	6	7	6	5	6
	D	0-7	Interior	16	16	16	16	16	16	16	16	14	16	16	13	16	16	12	16	15	11	16	14	10	16	12	8	14	10	7	12	9	6	10	7	5	9	7	7	8	6	6
			Exposed	16	16	12	16	15	10	16	13	9	16	12	8	15	11	8	14	10	7	12	9	6	10	8	5	9	6	7	8	5	6	7	5	5	6	6	4	5	6	4
		7-20	Interior	16	16	16	16	16	14	16	16	13	16	16	11	16	14	10	16	13	9	16	12	9	14	10	7	12	8	6	10	7	5	9	6	7	8	5	6	7	5	5
			Exposed	16	14	10	16	13	9	16	11	8	14	10	7	13	9	7	11	8	6	10	8	5	9	6	7	7	5	6	6	7	5	6	6	5	5	5	4	7	5	3
		20-27	Interior	19	19	19	19	19	17	19	19	15	19	17	14	19	15	13	19	14	11	19	13	10	18	11	9	16	9	7	14	8	6	12	7	6	10	6	5	9	5	7
			Exposed	19	15	13	19	14	11	19	12	10	19	11	9	17	10	8	16	9	7	14	8	7	12	7	6	10	6	5	9	5	6	8	7	6	7	6	5	6	5	4
		27-45	Interior	21	21	21	21	21	21	21	21	19	21	21	17	20	19	15	19	18	14	18	16	13	15	13	11	13	11	9	11	10	8	10	9	7	8	8	6	7	7	5
			Exposed	21	19	15	19	17	13	17	15	12	15	14	11	14	12	10	13	11	9	12	10	8	10	9	7	8	7	6	7	6	5	6	6	7	5	5	6	5	7	5
50	B	0-7	Interior	13	13	13	13	13	13	13	13	13	13	13	13	13	13	13	13	13	13	13	13	13	13	13	12	13	13	11	13	13	9	13	13	9	13	12	8	13	10	7
			Exposed	13	13	13	13	13	13	13	13	13	13	13	13	13	13	13	13	13	12	13	13	11	13	13	9	13	11	8	13	10	7	12	9	6	10	7	5	9	7	7
		7-20	Interior	13	13	13	13	13	13	13	13	13	13	13	13	13	13	13	13	13	13	13	13	13	13	13	13	13	13	11	13	13	9	13	11	8	13	10	7	12	9	6
			Exposed	13	13	13	13	13	13	13	13	13	13	13	13	13	13	12	13	13	11	13	13	10	13	11	8	13	10	7	11	8	6	10	7	5	9	6	7	8	6	6
		20-27	Interior	15	15	15	15	15	15	15	15	15	15	15	15	15	15	15	15	15	15	15	15	15	15	15	13	15	14	11	15	12	10	15	11	9	14	9	8
			Exposed	15	15	15	15	15	15	15	15	15	15	15	15	15	15	14	15	15	13	15	14	12	15	12	10	15	10	9	15	9	7	14	8	6	12	7	6	10	6	5
		27-45	Interior	18	18	18	18	18	18	18	18	18	18	18	18	18	18	18	18	18	18	18	18	18	18	18	18	17	17	16	16	16	14	16	15	12	15	13	10	13	12	9
			Exposed	18	18	18	18	18	18	18	18	18	18	18	18	18	18	17	18	18	16	18	18	14	17	15	12	15	13	10	13	11	9	11	10	8	10	9	7	9	8	6
	C	0-7	Interior	13	13	13	13	13	13	13	13	13	13	13	13	13	13	13	13	13	13	13	13	12	13	13	10	13	12	8	13	10	7	13	9	6	11	8	5	10	7	5
			Exposed	13	13	13	13	13	13	13	13	11	13	13	10	13	13	9	13	12	8	13	11	8	13	9	6	11	8	5	9	7	7	8	6	6	7	5	5	6	7	5
		7-20	Interior	13	13	13	13	13	13	13	13	13	13	13	13	13	13	13	13	13	11	13	13	10	13	12	9	13	10	7	12	9	6	10	8	6	9	7	5	8	6	7
			Exposed	13	13	12	13	13	11	13	13	10	13	12	9	13	11	8	13	10	7	13	9	7	11	8	6	9	7	5	8	6	6	7	5	5	6	7	5	5	6	4
		20-27	Interior	15	15	15	15	15	15	15	15	15	15	15	15	15	15	15	15	15	14	15	15	13	15	13	11	15	11	9	14	9	8	14	8	7	13	7	6	11	6	5
			Exposed	15	15	15	15	15	13	15	15	12	15	13	11	15	12	10	15	11	9	15	10	8	14	8	7	12	7	6	11	6	5	9	5	7	8	7	6	7	6	5
		27-45	Interior	18	18	18	18	18	18	18	18	18	18	18	18	18	18	17	17	17	17	17	17	15	16	16	13	15	14	11	13	12	9	12	10	8	10	9	7	9	8	6
			Exposed	18	18	18	18	18	16	18	18	15	18	17	13	17	15	12	15	14	11	14	12	10	12	11	8	10	9	7	9	8	6	8	7	5	7	6	7	6	5	6
	D	0-7	Interior	14	14	14	14	14	14	14	14	14	14	14	14	14	14	12	14	14	11	14	14	10	14	12	8	14	10	7	12	9	6	10	7	5	9	7	7	8	6	6
			Exposed	14	14	12	14	14	10	14	13	9	14	12	8	14	11	8	14	10	7	12	9	6	10	8	5	9	6	7	8	5	6	7	5	5	6	6	4	5	6	4
		7-20	Interior	14	14	14	14	14	14	14	14	13	14	14	11	14	14	10	14	13	9	14	12	9	14	10	7	12	8	6	10	7	5	9	6	7	8	5	6	7	5	5
			Exposed	14	14	10	14	13	9	14	11	8	14	10	7	13	9	7	11	8	6	10	8	5	9	6	7	7	5	6	6	7	5	6	6	5	5	5	4	7	5	3
		20-27	Interior	16	16	16	16	16	16	16	16	15	16	16	14	16	15	13	16	14	11	16	13	10	16	11	9	15	9	7	14	8	6	12	7	6	10	6	5	9	5	7
			Exposed	16	15	13	16	14	11	16	12	10	16	11	9	16	10	8	16	9	7	14	8	7	12	7	6	10	6	5	9	5	6	8	7	6	7	6	5	6	5	4
		27-45	Interior	19	19	19	19	19	19	19	19	19	19	19	17	18	18	15	17	17	14	17	16	13	15	13	11	13	11	9	11	10	8	10	9	7	8	8	6	7	7	5
			Exposed	19	19	15	19	17	13	17	15	12	15	14	11	14	12	10	13	11	9	12	10	8	10	9	7	8	7	6	7	6	5	6	6	7	5	5	6	5	7	5

* Cells with an astrisks indicates that the L-foot must be oriented in the Y- direction as indicated in the image.

10 Highlighted cell indicate 3-rail system span. Contact Unirac Engineering Services for support.

~~10~~ Highlighted cell with strikethrough indicate 3-rail system span and module clamp allowable capacity exceeds with 3-rails. 4-Rail system required. Contact Unirac Engineering Services for support.

UNIRAC

ASCE 7-22	II	30 ft	Ss = 3.00	19 sq.ft	PORTRAIT	CROSS-SLOPE	NXT	NXT COMBO	Stronghold BUTYL OSB
Design Standard	Risk Category	Roof Height	Seismic	Module Area	Orientation	Rail Direction	Rail Type	Clamp	Attachment

SPAN TABLES

Maximum Allowable Rail Spans for Rooftop Solar Panels Parallel to the Roof Surface (inches)

Ground Snow Load (psf)	Wind Exposure Category	Roof Tilt Angle (deg)	Panel Exposure	Basic Wind Speed (mph)																																								
				90			95			100			105			110			115			120			130			140			150			160			170			180		
				Roof Wind Zone																																								
				1	2	3	1	2	3	1	2	3	1	2	3	1	2	3	1	2	3	1	2	3	1	2	3	1	2	3	1	2	3	1	2	3	1	2	3	1	2	3
60	B	0-7	Interior	11	11	11	11	11	11	11	11	11	11	11	11	11	11	11	11	11	11	11	11	11	11	11	11	11	11	11	11	11	11	11	11	9	11	11	8	11	10	7
			Exposed	11	11	11	11	11	11	11	11	11	11	11	11	11	11	11	11	11	11	11	11	11	11	11	9	11	11	8	11	10	7	11	9	6	10	7	5	9	7	7
		7-20	Interior	11	11	11	11	11	11	11	11	11	11	11	11	11	11	11	11	11	11	11	11	11	11	11	11	11	11	11	11	11	9	11	11	8	11	10	7	11	9	6
			Exposed	11	11	11	11	11	11	11	11	11	11	11	11	11	11	11	11	11	11	11	11	10	11	11	8	11	10	7	11	8	6	10	7	5	9	6	7	8	6	6
		20-27	Interior	13	13	13	13	13	13	13	13	13	13	13	13	13	13	13	13	13	13	13	13	13	13	13	13	13	13	13	13	13	11	13	12	10	13	11	9	13	9	8
			Exposed	13	13	13	13	13	13	13	13	13	13	13	13	13	13	13	13	13	13	13	13	12	13	12	10	13	10	9	13	9	7	13	8	6	12	7	6	10	6	5
		27-45	Interior	16	16	16	16	16	16	16	16	16	16	16	16	16	16	16	16	16	16	16	16	16	16	16	16	15	15	15	15	15	14	14	14	12	13	13	10	13	12	9
			Exposed	16	16	16	16	16	16	16	16	16	16	16	16	16	16	16	16	16	16	16	16	14	16	15	12	15	13	10	13	11	9	11	10	8	10	9	7	9	8	6
	C	0-7	Interior	11	11	11	11	11	11	11	11	11	11	11	11	11	11	11	11	11	11	11	11	11	11	11	10	11	11	8	11	10	7	11	9	6	11	8	5	10	7	5
			Exposed	11	11	11	11	11	11	11	11	11	11	11	10	11	11	9	11	11	8	11	11	8	11	9	6	11	8	5	9	7	7	8	6	6	7	5	5	6	7	5
		7-20	Interior	11	11	11	11	11	11	11	11	11	11	11	11	11	11	11	11	11	11	11	11	10	11	11	9	11	10	7	11	9	6	10	8	6	9	7	5	8	6	7
			Exposed	11	11	11	11	11	11	11	11	10	11	11	9	11	11	8	11	10	7	11	9	7	11	8	6	9	7	5	8	6	6	7	5	5	6	7	5	5	6	4
		20-27	Interior	13	13	13	13	13	13	13	13	13	13	13	13	13	13	13	13	13	13	13	13	13	13	13	11	13	11	9	13	9	8	12	8	7	12	7	6	11	6	5
			Exposed	13	13	13	13	13	13	13	13	12	13	13	11	13	12	10	13	11	9	13	10	8	13	8	7	12	7	6	11	6	5	9	5	7	8	7	6	7	6	5
		27-45	Interior	16	16	16	16	16	16	16	16	16	16	16	16	16	16	16	16	16	16	15	15	15	14	14	13	14	14	11	13	12	9	12	10	8	10	9	7	9	8	6
			Exposed	16	16	16	16	16	16	16	16	15	16	16	13	16	15	12	15	14	11	14	12	10	12	11	8	10	9	7	9	8	6	8	7	5	7	6	7	6	5	6
	D	0-7	Interior	12	12	12	12	12	12	12	12	12	12	12	12	12	12	12	12	12	11	12	12	10	12	12	8	12	10	7	12	9	6	10	7	5	9	7	7	8	6	6
			Exposed	12	12	12	12	12	10	12	12	9	12	12	8	12	11	8	12	10	7	12	9	6	10	8	5	9	6	7	8	5	6	7	5	5	6	6	4	5	6	4
		7-20	Interior	12	12	12	12	12	12	12	12	12	12	12	11	12	12	10	12	12	9	12	12	9	12	10	7	12	8	6	10	7	5	9	6	7	8	5	6	7	5	5
			Exposed	12	12	10	12	12	9	12	11	8	12	10	7	12	9	7	11	8	6	10	8	5	9	6	7	7	5	6	6	7	5	6	6	5	5	5	4	7	5	3
		20-27	Interior	14	14	14	14	14	14	14	14	14	14	14	14	14	14	13	14	14	11	14	13	10	14	11	9	14	9	7	13	8	6	12	7	6	10	6	5	9	5	7
			Exposed	14	14	13	14	14	11	14	12	10	14	11	9	14	10	8	14	9	7	14	8	7	12	7	6	10	6	5	9	5	6	8	7	6	7	6	5	6	5	4
		27-45	Interior	17	17	17	17	17	17	17	17	17	17	17	17	16	16	15	16	16	14	15	15	13	14	13	11	13	11	9	11	10	8	10	9	7	8	8	6	7	7	5
			Exposed	17	17	15	17	17	13	17	15	12	15	14	11	14	12	10	13	11	9	12	10	8	10	9	7	8	7	6	7	6	5	6	6	7	5	5	6	5	7	5
70	B	0-7	Interior	9	9	9	9	9	9	9	9	9	9	9	9	9	9	9	9	9	9	9	9	9	9	9	9	9	9	9	9	9	9	9	9	9	9	9	8	9	9	7
			Exposed	9	9	9	9	9	9	9	9	9	9	9	9	9	9	9	9	9	9	9	9	9	9	9	9	9	9	8	9	9	7	9	9	6	9	7	5	9	7	7
		7-20	Interior	9	9	9	9	9	9	9	9	9	9	9	9	9	9	9	9	9	9	9	9	9	9	9	9	9	9	9	9	9	9	9	9	8	9	9	7	9	9	6
			Exposed	9	9	9	9	9	9	9	9	9	9	9	9	9	9	9	9	9	9	9	9	9	9	9	8	9	9	7	9	8	6	9	7	5	9	6	7	8	6	6
		20-27	Interior	12	12	12	12	12	12	12	12	12	12	12	12	12	12	12	12	12	12	12	12	12	12	12	12	12	12	12	12	12	11	12	12	10	12	11	9	11	9	8
			Exposed	12	12	12	12	12	12	12	12	12	12	12	12	12	12	12	12	12	12	12	12	12	12	12	10	12	10	9	12	9	7	12	8	6	12	7	6	10	6	5
		27-45	Interior	14	14	14	14	14	14	14	14	14	14	14	14	14	14	14	14	14	14	14	14	14	14	14	14	14	14	14	13	13	13	13	13	12	12	12	10	12	12	9
			Exposed	14	14	14	14	14	14	14	14	14	14	14	14	14	14	14	14	14	14	14	14	14	14	14	12	14	13	10	13	11	9	11	10	8	10	9	7	9	8	6
	C	0-7	Interior	9	9	9	9	9	9	9	9	9	9	9	9	9	9	9	9	9	9	9	9	9	9	9	9	9	9	8	9	9	7	9	9	6	9	8	5	9	7	5
			Exposed	9	9	9	9	9	9	9	9	9	9	9	9	9	9	9	9	9	8	9	9	8	9	9	6	9	8	5	9	7	7	8	6	6	7	5	5	6	7	5
		7-20	Interior	9	9	9	9	9	9	9	9	9	9	9	9	9	9	9	9	9	9	9	9	9	9	9	9	9	9	7	9	9	6	9	8	6	9	7	5	8	6	7
			Exposed	9	9	9	9	9	9	9	9	9	9	9	9	9	9	8	9	9	7	9	9	7	9	8	6	9	7	5	8	6	6	7	5	5	6	7	5	5	6	4
		20-27	Interior	12	12	12	12	12	12	12	12	12	12	12	12	12	12	12	12	12	12	12	12	12	12	12	11	12	11	9	11	9	8	11	8	7	11	7	6	10	6	5
			Exposed	12	12	12	12	12	12	12	12	12	12	12	11	12	12	10	12	11	9	12	10	8	12	8	7	12	7	6	11	6	5	9	5	7	8	7	6	7	6	5
		27-45	Interior	14	14	14	14	14	14	14	14	14	14	14	14	14	14	14	14	14	14	14	14	14	13	13	13	12	12	11	12	12	9	11	10	8	10	9	7	9	7	5
			Exposed	14	14	14	14	14	14	14	14	14	14	14	14	14	14	14	14	14	14	14	14	14	14	14	12	14	13	10	12	11	9	11	10	8	10	9	7	9	8	6
	D	0-7	Interior	10	10	10	10	10	10	10	10	10	10	10	10	10	10	10	10	10	10	10	10	10	10	10	8	10	10	7	10	9	6	10	7	5	9	7	7	8	6	6
			Exposed	10	10	10	10	10	10	10	10	9	10	10	8	10	10	8	10	10	7	10	9	6	10	8	5	9	6	7	8	5	6	7	5	5	6	6	4	5	6	4
		7-20	Interior	10	10	10	10	10	10	10	10	10	10	10	10	10	10	10	10	10	9	10	10	9	10	10	7	10	8	6	10	7	5	9	6	7	8	5	6	7	5	5
			Exposed	10	10	10	10	10	9	10	10	8	10	10	7	10	9	7	10	8	6	10	8	5	9	6	7	7	5	6	6	7	5	6	6	5	5	5	4	7	5	3
		20-27	Interior	13	13	13	13	13	13	13	13	13	13	13	13	13	13	13	13	13	11	13	13	10	13	11	9	12	9	7	12	8	6	11	7	6	10	6	5	9	5	7
			Exposed	13	13	13	13	13	11	13	12	10	13	11	9	13	10	8	13	9	7	13	8	7	12	7	6	10	6	5	9	5	6	8	7	6	7	6	5	6	5	4
		27-45	Interior	15	15	15	15	15	15	15	15	15	15	15	15	15	15	15	14	14	14	14	14	13	13	13	11	12	11	9	11	10	8	10	9	7	8	8	6	7	7	5
			Exposed	15	15	15	15	15	13	15	15	12	15	14	11	14	12	10	13	11	9	12	10	8	10	9	7	8	7	6	7	6	5	6	6	7	5	5	6	5	7	5
80	B	0-7	Interior	8	8	8	8	8	8	8	8	8	8	8	8	8	8	8	8	8	8	8	8	8	8	8	8	8	8	8	8	8	8	8	8	8	8	8	8	8	8	7
			Exposed	8	8	8	8	8	8	8	8	8	8	8	8	8	8	8	8	8	8	8	8	8	8	8	8	8	8	8	8	8	7	8	8	6	8	7	5	8	7	7
		7-20	Interior	8	8	8	8	8	8	8	8	8	8	8	8	8	8	8	8	8	8	8	8	8	8	8	8	8	8	8	8	8	8	8	8	8	8	8	7	8	8	6
			Exposed	8	8	8	8	8	8	8	8	8	8	8	8	8	8	8	8	8	8	8	8	8	8	8	7	8	8	6	8	7	5	8	6	7	8	6	6	8	6	6
		20-27	Interior	10	10	10	10	10	10	10	10	10	10	10	10	10	10	10	10	10	10	10	10	10	10	10	10	10	10	10	10	10	10	10	10	10	10	10	9	10	9	8
			Exposed	10	10	10	10	10	10	10	10	10	10	10	10	10	10	10	10	10	10	10	10	10	10	10	10	10	10	9	10	9	7	10	8	6	10	7	6	10	6	5
		27-45	Interior	13	13	13	13	13	13	13	13	13	13	13	13	13	13	13	13	13	13	13	13	13	13	13	13	13	13	13	12	12	12	12	12	12	11	11	10	11	11	9
			Exposed	13	13	13	13	13	13	13	13	13	13	13	13	13	13	13	13	13	13	13	13	13	13	13	10	12	11	9	11	10	8	10	9	7	9	7	5	9	8	6
	C	0-7	Interior	8	8	8	8	8	8	8	8	8	8	8	8	8	8	8	8	8	8	8	8	8	8	8	8	8	8	8	8	8	7	8	8	6	8	8	5	8	7	5
			Exposed	8	8	8	8	8	8	8	8	8	8	8	8	8	8	8	8	8	8	8	8	8	8	8	5	8	7	7	8	6	6	7	5	5	6	7	5	6	7	5
		7-20	Interior	8	8	8	8	8	8	8	8	8	8	8	8	8	8	8	8	8	8	8	8	8	8	8	8	8	8	7	8	8	6	8	8	6	8	7	5	8	6	7
			Exposed	8	8	8	8	8	8	8	8	8	8	8	8	8	8	8	8	8	7	8	8	7	8	8	6	8	7	5	8	6	6	7	5	5	6	7	5	5	6	4
		20-27	Interior	10	10	10	10	10	10	10	10	10	10	10	10	10	10	10	10	10	10	10	10	10	10	10	9	10	9	8	10	8	7	10	7	6	9	6	5	9	6	5
			Exposed	10	10	10	10	10	10	10	10	10	10	10	10	10	10	10	10	10	9	10	10	8	10	8	7	10	7	6	10	6	5	9	5	7	8	7	6	7	6	5
		27-45	Interior	13	13	13	13	13	13	13	13	13	13	13	13	13	13	13	13	13	13	13	13	13	12	12	12	11	11	11	11	11	9	10	10	8	10	9	7	9	8	6
			Exposed	13	13	13	13	13	13	13	13	13	13	13	13	13	13	12	13	13	11	13	12	10	12	11	8	10	9	7	9	8	6	8	7	5	7	6	7	6	5	6
	D	0-7	Interior	9	9	9	9	9	9	9	9	9	9	9	9	9	9	9	9	9	9	9	9	9	9	9	8	9	9	7	9	9	6	9	7	5	9	7	7	8	6	6
			Exposed	9	9	9	9	9	9	9	9	9	9	9	8	9	9	8	9	9	7	9	9	6	9	8	5	9	6	7	8	5	6	7	5	5	6	6	4	5	6	4
		7-20	Interior	9	9	9	9	9	9	9	9	9	9	9	9	9	9	9	9	9	9	9	9	9	9	9	7	9	8	6	9	7	5	9	6	7	8	5	6	7	5	5
			Exposed	9	9	9	9	9	9	9	9	8	9	9	7	9	8	6	9	8	5	9	6	7	7	5	6	6	5	6	6	7	5	6	6	5	5	5	4	7	5	3
		20-27	Interior	11	11	11	11	11	11	11	11	11	11	11	11	11	11	11	11	11	11	11	11	10	11	11	9	11	9	7	11	8	6	10	7	6	10	6	5	9	5	7
			Exposed	11	11	11	11	11	11	11	11	10	11	11	9	11	10	8	11	9	7	11	8	7	11	7	6	10	6	5	9	5	6	8	7	6	7	6	5	6	5	4
		27-45	Interior	14	14	14	14	14	14	14	14	14	14	14	14	13	13	13	13	13	13	13	13	13	12	12	11	11	11	9	11	10	8	10	9	7	8	8	6	7	7	5
			Exposed	14	14	14	14	14	13	14	14	12	14	14	11	13	12	10	13	11	9	12	10	8	10	9	7	8	7	6	7	6	5	6	6	7	5	5	6	5	7	5

* Cells with an astrisks indicates that the L-foot must be oriented in the Y- direction as indicated in the image.

10 Highlighted cell indicate 3-rail system span. Contact Unirac Engineering Services for support.

~~10~~ Highlighted cell with strikethrough indicate 3-rail system span and module clamp allowable capacity exceeds with 3-rails. 4-Rail system required. Contact Unirac Engineering Services for support.

UNIRAC

ASCE 7-22	II	30 ft	Ss = 3.00	19 sq.ft	PORTRAIT	CROSS-SLOPE	NXT	NXT COMBO	Stronghold BUTYL OSB
Design Standard	Risk Category	Roof Height	Seismic	Module Area	Orientation	Rail Direction	Rail Type	Clamp	Attachment

SPAN TABLES

Maximum Allowable Rail Spans for Rooftop Solar Panels Parallel to the Roof Surface (inches)

Ground Snow Load (psf)	Wind Exposure Category	Roof Tilt Angle (deg)	Panel Exposure	Basic Wind Speed (mph)																																						
				90			95			100			105			110			115			120			130			140			150			160			170			180		
				Roof Wind Zone																																						
				1	2	3	1	2	3	1	2	3	1	2	3	1	2	3	1	2	3	1	2	3	1	2	3	1	2	3	1	2	3	1	2	3	1	2	3	1	2	3
90	B	0-7	Interior	7	7	7	7	7	7	7	7	7	7	7	7	7	7	7	7	7	7	7	7	7	7	7	7	7	7	7	7	7	7	7	7	7	7	7	7	7	7	7
			Exposed	7	7	7	7	7	7	7	7	7	7	7	7	7	7	7	7	7	7	7	7	7	7	7	7	7	7	7	7	7	7	7	7	6	7	7	5	7	7	7
		7-20	Interior	7	7	7	7	7	7	7	7	7	7	7	7	7	7	7	7	7	7	7	7	7	7	7	7	7	7	7	7	7	7	7	7	7	7	7	7	7	7	6
			Exposed	7	7	7	7	7	7	7	7	7	7	7	7	7	7	7	7	7	7	7	7	7	7	7	7	7	7	7	7	7	6	7	7	5	7	6	7	7	6	6
		20-27	Interior	9	9	9	9	9	9	9	9	9	9	9	9	9	9	9	9	9	9	9	9	9	9	9	9	9	9	9	9	9	9	9	9	9	9	9	9	9	9	8
			Exposed	9	9	9	9	9	9	9	9	9	9	9	9	9	9	9	9	9	9	9	9	9	9	9	9	9	9	9	9	9	7	9	8	6	9	7	6	9	6	5
		27-45	Interior	12	12	12	12	12	12	12	12	12	12	12	12	12	12	12	12	12	12	12	12	12	12	12	12	12	12	12	11	11	11	11	11	11	10	10	10	10	10	9
			Exposed	12	12	12	12	12	12	12	12	12	12	12	12	12	12	12	12	12	12	12	12	12	12	12	12	12	12	10	11	11	9	11	10	8	10	9	7	9	8	6
	C	0-7	Interior	7	7	7	7	7	7	7	7	7	7	7	7	7	7	7	7	7	7	7	7	7	7	7	7	7	7	7	7	7	7	7	7	6	7	7	5	7	7	5
			Exposed	7	7	7	7	7	7	7	7	7	7	7	7	7	7	7	7	7	7	7	7	7	7	7	6	7	7	5	7	7	7	7	6	6	7	5	5	6	7	5
		7-20	Interior	7	7	7	7	7	7	7	7	7	7	7	7	7	7	7	7	7	7	7	7	7	7	7	7	7	7	7	7	7	6	7	7	6	7	7	5	7	6	7
			Exposed	7	7	7	7	7	7	7	7	7	7	7	7	7	7	7	7	7	7	7	7	7	7	7	6	7	7	5	7	6	6	7	5	5	6	7	5	5	6	4
		20-27	Interior	9	9	9	9	9	9	9	9	9	9	9	9	9	9	9	9	9	9	9	9	9	9	9	9	9	9	9	9	9	8	9	8	7	9	7	6	9	6	5
			Exposed	9	9	9	9	9	9	9	9	9	9	9	9	9	9	9	9	9	9	9	9	8	9	8	7	9	7	6	9	6	5	9	5	7	8	7	6	7	6	5
		27-45	Interior	12	12	12	12	12	12	12	12	12	12	12	12	12	12	12	12	12	12	12	12	12	11	11	11	11	11	11	10	10	9	10	10	8	9	9	7	9	8	6
			Exposed	12	12	12	12	12	12	12	12	12	12	12	12	12	12	12	12	12	11	12	12	10	11	11	8	10	9	7	9	8	6	8	7	5	7	6	7	6	5	6
	D	0-7	Interior	8	8	8	8	8	8	8	8	8	8	8	8	8	8	8	8	8	8	8	8	8	8	8	8	8	8	7	8	8	6	8	7	5	8	7	7	8	6	6
			Exposed	8	8	8	8	8	8	8	8	8	8	8	8	8	8	8	8	8	7	8	8	6	8	8	5	8	6	7	8	5	6	7	5	5	6	6	4	5	6	4
		7-20	Interior	8	8	8	8	8	8	8	8	8	8	8	8	8	8	8	8	8	8	8	8	8	8	8	7	8	8	6	8	7	5	8	6	7	8	5	6	7	5	5
			Exposed	8	8	8	8	8	8	8	8	8	8	8	7	8	8	7	8	8	6	8	8	5	8	6	7	7	5	6	6	7	5	6	6	5	5	5	4	7	5	3
		20-27	Interior	10	10	10	10	10	10	10	10	10	10	10	10	10	10	10	10	10	10	10	10	10	10	10	9	10	9	7	10	8	6	10	7	6	9	6	5	9	5	7
			Exposed	10	10	10	10	10	10	10	10	10	10	10	9	10	10	8	10	9	7	10	8	7	10	7	6	10	6	5	9	5	6	8	7	6	7	6	5	6	5	4
		27-45	Interior	13	13	13	13	13	13	13	13	13	13	13	13	12	12	12	12	12	12	12	12	12	11	11	11	11	11	9	10	10	8	10	9	7	8	8	6	7	7	5
			Exposed	13	13	13	13	13	13	13	13	12	13	13	11	12	12	10	12	11	9	12	10	8	10	9	7	8	7	6	7	6	5	6	6	7	5	5	6	5	7	5
100	B	0-7	Interior	6	6	6	6	6	6	6	6	6	6	6	6	6	6	6	6	6	6	6	6	6	6	6	6	6	6	6	6	6	6	6	6	6	6	6	6	6	6	6
			Exposed	6	6	6	6	6	6	6	6	6	6	6	6	6	6	6	6	6	6	6	6	6	6	6	6	6	6	6	6	6	6	6	6	6	6	6	5	6	6	7
		7-20	Interior	7	7	7	7	7	7	7	7	7	7	7	7	7	7	7	7	7	7	7	7	7	7	7	7	7	7	7	7	7	7	7	7	7	7	7	7	7	7	6
			Exposed	7	7	7	7	7	7	7	7	7	7	7	7	7	7	7	7	7	7	7	7	7	7	7	7	7	7	7	7	7	6	7	7	5	7	6	7	7	6	6
		20-27	Interior	8	8	8	8	8	8	8	8	8	8	8	8	8	8	8	8	8	8	8	8	8	8	8	8	8	8	8	8	8	8	8	8	8	8	8	8	8	8	8
			Exposed	8	8	8	8	8	8	8	8	8	8	8	8	8	8	8	8	8	8	8	8	8	8	8	8	8	8	8	8	8	7	8	8	6	8	7	6	8	6	5
		27-45	Interior	10	10	10	10	10	10	10	10	10	10	10	10	10	10	10	10	10	10	10	10	10	10	10	10	10	10	10	10	10	10	10	10	10	10	10	10	9	9	9
			Exposed	10	10	10	10	10	10	10	10	10	10	10	10	10	10	10	10	10	10	10	10	10	10	10	10	10	10	10	10	10	9	10	10	8	10	9	7	9	8	6
	C	0-7	Interior	6	6	6	6	6	6	6	6	6	6	6	6	6	6	6	6	6	6	6	6	6	6	6	6	6	6	6	6	6	6	6	6	6	6	6	5	6	6	5
			Exposed	6	6	6	6	6	6	6	6	6	6	6	6	6	6	6	6	6	6	6	6	6	6	6	6	6	6	5	6	6	7	6	6	6	6	5	5	6	7	5
		7-20	Interior	7	7	7	7	7	7	7	7	7	7	7	7	7	7	7	7	7	7	7	7	7	7	7	7	7	7	7	7	7	6	7	7	6	7	7	5	7	6	7
			Exposed	7	7	7	7	7	7	7	7	7	7	7	7	7	7	7	7	7	7	7	7	7	7	7	6	7	7	5	7	6	6	7	5	5	6	7	5	5	6	4
		20-27	Interior	8	8	8	8	8	8	8	8	8	8	8	8	8	8	8	8	8	8	8	8	8	8	8	8	8	8	8	8	8	8	8	8	7	8	7	6	8	6	5
			Exposed	8	8	8	8	8	8	8	8	8	8	8	8	8	8	8	8	8	8	8	8	8	8	8	7	8	7	6	8	6	5	8	5	7	8	7	6	7	6	5
		27-45	Interior	10	10	10	10	10	10	10	10	10	10	10	10	10	10	10	10	10	10	10	10	10	10	10	10	10	10	10	9	9	9	9	9	8	9	9	7	8	8	6
			Exposed	10	10	10	10	10	10	10	10	10	10	10	10	10	10	10	10	10	10	10	10	10	10	10	8	10	9	7	9	8	6	8	7	5	7	6	7	6	5	6
	D	0-7	Interior	7	7	7	7	7	7	7	7	7	7	7	7	7	7	7	7	7	7	7	7	7	7	7	7	7	7	7	7	7	6	7	7	5	7	7	7	7	6	6
			Exposed	7	7	7	7	7	7	7	7	7	7	7	7	7	7	7	7	7	7	7	7	6	7	7	5	7	6	7	7	5	6	7	5	5	6	6	4	5	6	4
		7-20	Interior	7	7	7	7	7	7	7	7	7	7	7	7	7	7	7	7	7	7	7	7	7	7	7	7	7	7	6	7	7	5	7	6	7	7	5	6	7	5	5
			Exposed	7	7	7	7	7	7	7	7	7	7	7	7	7	7	7	7	7	6	7	7	5	7	6	7	7	5	6	6	7	5	6	6	5	5	5	4	7	5	3
		20-27	Interior	9	9	9	9	9	9	9	9	9	9	9	9	9	9	9	9	9	9	9	9	9	9	9	9	9	9	7	9	8	6	9	7	6	9	6	5	8	5	7
			Exposed	9	9	9	9	9	9	9	9	9	9	9	9	9	9	8	9	9	7	9	8	7	9	7	6	9	6	5	9	5	6	8	7	6	7	6	5	6	5	4
		27-45	Interior	12	12	12	12	12	12	12	12	12	12	12	12	12	12	12	11	11	11	11	11	11	11	11	11	10	10	9	10	10	8	9	9	7	8	8	6	7	7	5
			Exposed	12	12	12	12	12	12	12	12	12	12	12	11	12	12	10	11	11	9	11	10	8	10	9	7	8	7	6	7	6	5	6	6	7	5	5	6	5	7	5

* Cells with an astrisks indicates that the L-foot must be oriented in the Y- direction as indicated in the image.

10 Highlighted cell indicate 3-rail system span. Contact Unirac Engineering Services for support.

~~10~~ Highlighted cell with strikethrough indicate 3-rail system span and module clamp allowable capacity exceeds with 3-rails. 4-Rail system required. Contact Unirac Engineering Services for support.

UNIRAC

ASCE 7-22	II	30 ft	Ss = 3.00	19 sq.ft	LANDSCAPE	CROSS-SLOPE	NXT	NXT COMBO	Stronghold BUTYL OSB
Design Standard	Risk Category	Roof Height	Seismic	Module Area	Orientation	Rail Direction	Rail Type	Clamp	Attachment

SPAN TABLES

Maximum Allowable Rail Spans for Rooftop Solar Panels Parallel to the Roof Surface (inches)

Ground Snow Load (psf)	Wind Exposure Category	Roof Tilt Angle (deg)	Panel Exposure	Basic Wind Speed (mph)																																						
				90			95			100			105			110			115			120			130			140			150			160			170			180		
				Roof Wind Zone																																						
				1	2	3	1	2	3	1	2	3	1	2	3	1	2	3	1	2	3	1	2	3	1	2	3	1	2	3	1	2	3	1	2	3	1	2	3	1	2	3
0	B	0-7	Interior	57	57	55	57	57	49	57	57	44	57	57	39	57	51	35	57	46	32	57	42	29	49	35	25	42	30	21	36	26	18	31	23	16	27	20	14	24	17	12
			Exposed	57	51	35	57	45	31	56	40	28	50	36	25	46	33	23	41	30	21	38	27	19	32	23	16	27	19	14	23	17	12	20	15	10	18	13	9	16	11	12
		7-20	Interior	57	57	48	57	57	43	57	53	38	57	47	34	57	43	31	54	39	28	49	35	26	41	30	22	35	25	19	30	22	16	26	19	14	23	17	12	20	15	11
			Exposed	57	42	31	52	38	28	47	34	25	42	30	22	38	27	20	34	25	18	31	23	17	26	19	14	22	16	12	19	14	10	17	12	9	15	11	12	13	10	11
		20-27	Interior	58	58	58	58	58	52	58	57	46	58	51	42	58	46	38	58	42	34	58	38	31	56	32	26	48	27	22	41	24	19	35	20	17	31	18	15	28	16	13
			Exposed	58	46	38	58	41	33	58	36	30	57	33	27	52	30	24	47	27	22	43	25	20	36	21	17	31	18	15	26	15	13	23	13	11	20	12	10	18	10	9
		27-45	Interior	59	59	59	59	59	59	59	59	56	59	59	50	59	58	45	59	52	41	53	48	37	45	40	32	38	34	27	33	30	23	29	26	20	25	23	18	22	20	16
			Exposed	59	57	45	57	51	40	51	46	36	46	41	32	42	37	29	38	34	27	34	31	24	29	26	21	25	22	18	21	19	15	19	17	13	16	15	12	15	13	10
	C	0-7	Interior	57	54	37	57	48	33	57	43	30	54	38	27	48	35	24	44	31	22	40	29	20	33	24	17	28	21	14	25	18	12	21	15	11	19	14	10	17	12	8
			Exposed	48	34	24	43	31	21	38	27	19	34	25	17	31	22	16	28	20	14	26	19	13	22	16	11	18	13	9	16	11	8	14	10	11	12	9	9	11	12	8
		7-20	Interior	57	45	33	56	40	29	50	36	26	44	32	23	40	29	21	36	26	19	33	24	18	28	20	15	24	17	13	21	15	11	18	13	10	16	11	8	14	10	11
			Exposed	40	29	21	36	26	19	32	23	17	29	21	15	26	19	14	24	17	13	21	16	11	18	13	10	15	11	8	13	10	11	12	8	9	10	11	8	9	10	7
		20-27	Interior	58	49	40	58	43	35	58	39	32	58	35	28	55	31	26	50	28	23	45	26	21	38	22	18	32	19	15	28	16	13	24	14	12	21	12	10	19	11	9
			Exposed	55	31	26	48	28	23	43	25	20	39	22	18	35	20	17	32	18	15	29	17	14	25	14	12	21	12	10	18	10	9	16	9	11	14	8	10	12	11	9
		27-45	Interior	59	59	48	59	54	42	54	48	38	49	43	34	44	39	31	40	36	28	36	33	26	31	28	22	26	24	19	23	20	16	20	18	14	17	16	12	15	14	11
			Exposed	44	39	31	39	35	27	35	31	25	31	28	22	29	25	20	26	23	18	24	21	17	20	18	14	17	15	12	15	13	10	13	12	9	11	10	12	10	9	11
	D	0-7	Interior	57	44	31	55	39	27	49	35	25	44	32	22	40	29	20	36	26	18	33	24	17	28	20	14	24	17	12	20	15	10	18	13	9	16	11	12	14	10	11
			Exposed	40	28	20	35	25	18	31	23	16	28	20	14	26	19	13	23	17	12	21	15	11	18	13	9	15	11	12	13	10	10	11	8	9	10	11	8	9	10	7
		7-20	Interior	52	37	27	46	33	24	41	29	22	37	27	19	33	24	18	30	22	16	27	20	15	23	17	12	20	14	11	17	12	9	15	11	12	13	9	11	12	8	9
			Exposed	33	24	18	29	21	16	26	19	14	24	17	13	21	16	11	19	14	10	18	13	10	15	11	12	13	9	10	11	12	9	10	11	8	8	9	7	11	8	6
		20-27	Interior	58	40	33	58	36	29	56	32	26	50	29	24	45	26	21	41	24	19	37	22	18	31	18	15	27	16	13	23	13	11	20	12	10	18	10	8	16	9	11
			Exposed	45	26	21	40	23	19	36	21	17	32	19	15	29	17	14	26	15	13	24	14	12	20	12	10	17	10	8	15	9	11	13	12	10	11	10	8	10	9	7
		27-45	Interior	56	50	39	50	45	35	45	40	31	40	36	28	36	33	26	33	30	23	30	27	21	26	23	18	22	20	15	19	17	13	16	15	12	14	13	10	13	11	9
			Exposed	36	32	26	32	29	23	29	26	20	26	23	18	24	21	17	22	19	15	20	18	14	17	15	12	14	13	10	12	11	9	11	10	12	9	8	10	8	11	9
10	B	0-7	Interior	46	46	46	46	46	46	46	46	44	46	46	39	46	46	35	46	46	32	46	42	29	46	35	25	42	30	21	36	26	18	31	23	16	27	20	14	24	17	12
			Exposed	46	46	35	46	45	31	46	40	28	46	36	25	46	33	23	41	30	21	38	27	19	32	23	16	27	19	14	23	17	12	20	15	10	18	13	9	16	11	12
		7-20	Interior	47	47	47	47	47	43	47	47	38	47	47	34	47	43	31	47	39	28	47	35	26	41	30	22	35	25	19	30	22	16	26	19	14	23	17	12	20	15	11
			Exposed	47	42	31	47	38	28	47	34	25	42	30	22	38	27	20	34	25	18	31	23	17	26	19	14	22	16	12	19	14	10	17	12	9	15	11	12	13	10	11
		20-27	Interior	53	53	53	53	53	52	53	53	46	53	51	42	53	46	38	53	42	34	53	38	31	53	32	26	48	27	22	41	24	19	35	20	17	31	18	15	28	16	13
			Exposed	53	46	38	53	41	33	53	36	30	53	33	27	52	30	24	47	27	22	43	25	20	36	21	17	31	18	15	26	15	13	23	13	11	20	12	10	18	10	9
		27-45	Interior	57	57	57	57	57	57	57	57	56	57	57	50	57	57	45	57	52	41	53	48	37	45	40	32	38	34	27	33	30	23	29	26	20	25	23	18	22	20	16
			Exposed	57	57	45	57	51	40	51	46	36	46	41	32	42	37	29	38	34	27	34	31	24	29	26	21	25	22	18	21	19	15	19	17	13	16	15	12	15	13	10
	C	0-7	Interior	46	46	37	46	46	33	46	43	30	46	38	27	46	35	24	44	31	22	40	29	20	33	24	17	28	21	14	25	18	12	21	15	11	19	14	10	17	12	8
			Exposed	46	34	24	43	31	21	38	27	19	34	25	17	31	22	16	28	20	14	26	19	13	22	16	11	18	13	9	16	11	8	14	10	11	12	9	9	11	12	8
		7-20	Interior	47	45	33	47	40	29	47	36	26	44	32	23	40	29	21	36	26	19	33	24	18	28	20	15	24	17	13	21	15	11	18	13	10	16	11	8	14	10	11
			Exposed	40	29	21	36	26	19	32	23	17	29	21	15	26	19	14	24	17	13	21	16	11	18	13	10	15	11	8	13	10	11	12	8	9	10	11	8	9	10	7
		20-27	Interior	53	49	40	53	43	35	53	39	32	53	35	28	53	31	26	50	28	23	45	26	21	38	22	18	32	19	15	28	16	13	24	14	12	21	12	10	19	11	9
			Exposed	53	31	26	48	28	23	43	25	20	39	22	18	35	20	17	32	18	15	29	17	14	25	14	12	21	12	10	18	10	9	16	9	11	14	8	10	12	11	9
		27-45	Interior	57	57	48	57	54	42	54	48	38	49	43	34	44	39	31	40	36	28	36	33	26	31	28	22	26	24	19	23	20	16	20	18	14	17	16	12	15	14	11
			Exposed	44	39	31	39	35	27	35	31	25	31	28	22	29	25	20	26	23	18	24	21	17	20	18	14	17	15	12	15	13	10	13	12	9	11	10	12	10	9	11
	D	0-7	Interior	46	44	31	46	39	27	46	35	25	44	32	22	40	29	20	36	26	18	33	24	17	28	20	14	24	17	12	20	15	10	18	13	9	16	11	12	14	10	11
			Exposed	40	28	20	35	25	18	31	23	16	28	20	14	26	19	13	23	17	12	21	15	11	18	13	9	15	11	12	13	10	10	11	8	9	10	11	8	9	10	7
		7-20	Interior	47	37	27	46	33	24	41	29	22	37	27	19	33	24	18	30	22	16	27	20	15	23	17	12	20	14	11	17	12	9	15	11	12	13	9	11	12	8	9
			Exposed	33	24	18	29	21	16	26	19	14	24	17	13	21	16	11	19	14	10	18	13	10	15	11	12	13	9	10	11	12	9	10	11	8	8	9	7	11	8	6
		20-27	Interior	55	40	33	55	36	29	55	32	26	50	29	24	45	26	21	41	24	19	37	22	18	31	18	15	27	16	13	23	13	11	20	12	10	18	10	8	16	9	11
			Exposed	45	26	21	40	23	19	36	21	17	32	19	15	29	17	14	26	15	13	24	14	12	20	12	10	17	10	8	15	9	11	13	12	10	11	10	8	10	9	7
		27-45	Interior	56	50	39	50	45	35	45	40	31	40	36	28	36	33	26	33	30	23	30	27	21	26	23	18	22	20	15	19	17	13	16	15	12	14	13	10	13	11	9
			Exposed	36	32	26	32	29	23	29	26	20	26	23	18	24	21	17	22	19	15	20	18	14	17	15	12	14	13	10	12	11	9	11	10	12	9	8	10	8	11	9
20	B	0-7	Interior	34	34	34	34	34	34	34	34	34	34	34	34	34	34	34	34	34	32	34	34	29	34	34	25	34	30	21	34	26	18	31	23	16	27	20	14	24	17	12
			Exposed	34	34	34	34	34	31	34	34	28	34	34	25	34	33	23	34	30	21	34	27	19	32	23	16	27	19	14	23	17	12	20	15	10	18	13	9	16	11	12
		7-20	Interior	35	35	35	35	35	35	35	35	35	35	35	34	35	35	31	35	35	28	35	35	26	35	30	22	35	25	19	30	22	16	26	19	14	23	17	12	20	15	11
			Exposed	35	35	31	35	35	28	35	34	25	35	30	22	35	27	20	34	25	18	31	23	17	26	19	14	22	16	12	19	14	10	17	12	9	15	11	12	13	10	11
		20-27	Interior	42	42	42	42	42	42	42	42	42	42	42	42	42	42	38	42	42	34	42	38	31	42	32	26	42	27	22	41	24	19	35	20	17	31	18	15	28	16	13
			Exposed	42	42	38	42	41	33	42	36	30	42	33	27	42	30	24	42	27	22	42	25	20	36	21	17	31	18	15	26	15	13	23	13	11	20	12	10	18	10	9
		27-45	Interior	47	47	47	47	47	47	47	47	47	47	47	47	47	47	45	47	47	41	47	47	37	45	40	32	38	34	27	33	30	23	29	26	20	25	23	18	22	20	16
			Exposed	47	47	45	47	47	40	47	46	36	46	41	32	42	37	29	38	34	27	34	31	24	29	26	21	25	22	18	21	19	15	19	17	13	16	15	12	15	13	10
	C	0-7	Interior	34	34	34	34	34	33	34	34	30	34	34	27	34	34	24	34	31	22	34	29	20	33	24	17	28	21	14	25	18	12	21	15	11	19	14	10	17	12	8
			Exposed	34	34	24	34	31	21	34	27	19	34	25	17	31	22	16	28	20	14	26	19	13	22	16	11	18	13	9	16	11	8	14	10	11	12	9	9	11	12	8
		7-20	Interior	35	35	33	35	35	29	35	35	26	35	32	23	35	29	21	35	26	19	33	24	18	28	20	15	24	17	13	21	15	11	18	13	10	16	11	8	14	10	11
			Exposed	35	29	21	35	26	19	32	23	17	29	21	15	26	19	14	24	17	13	21	16	11	18	13	10	15	11	8	13	10	11	12	8	9	10	11	8	9	10	7
		20-27	Interior	42	42	40	42	42	35	42	39	32	42	35	28	42	31	26	42	28	23	42	26	21	38	22	18	32	19	15	28	16	13	24	14	12	21	12	10	19	11	9
			Exposed	42	31	26	42	28	23	42	25	20	39	22	18	35	20	17	32	18	15	29	17	14	25	14	12	21	12	10	18	10	9	16	9	11	14	8	10	12	11	9
		27-45	Interior	47	47	47	47	47	42	47	47	38	47	43	34	44	39	31	40	36	28	36	33	26	31	28	22	26	24	19	23	20	16	20	18	14	17	16	12	15	14	11
			Exposed	44	39	31	39	35	27	35	31	25	31	28	22	29	25	20	26	23	18	24	21	17	20	18	14	17	15	12	15	13	10	13	12	9	11	10	12	10	9	11
	D	0-7	Interior	34	34	31	34	34	27	34	34	25	34	32	22	34	29	20	34	26	18	33	24	17	28	20	14	24	17	12	20	15	10	18	13	9	16	11	12	14	10	11
			Exposed	34	28	20	34	25	18	31	23	16	28	20	14	26	19	13	23	17	12	21	15	11	18	13	9	15	11	12	13	10	10	11	8	9	10	11	8	9	10	7
		7-20	Interior	35	35	27	35	33	24	35	29	22	35	27	19	33	24	18	30	22	16	27	20	15	23	17	12	20	14	11	17	12	9	15	11	12	13	9	11	12	8	9
			Exposed	33	24	18	29	21	16	26	19	14	24	17	13	21	16	11	19	14	10	18	13	10	15	11	12	13	9	10	11	12	9	10	11	8	8	9	7	11	8	6
		20-27	Interior	44	40	33	44	36	29	44	32	26	44	29	24	44	26	21	41	24	19	37	22	18	31	18	15	27	16	13	23	13	11	20	12	10	18	10	8	16	9	11
			Exposed	44	26	21	40	23	19	36	21	17	32	19	15	29	17	14	26	15	13	24	14	12	20	12	10	17	10	8	15	9	11	13	12	10	11	10	8	10	9	7
		27-45	Interior	48	48	39	48	45	35	45	40	31	40	36	28	36	33	26	33	30	23	30	27	21	26	23	18	22	20	15	19	17	13	16	15	12	14	13	10	13	11	9
			Exposed	36	32	26	32	29	23	29	26	20	26	23	18	24	21	17	22	19	15	20	18	14	17	15	12	14	13	10	12	11	9	11	10	12	9	8	10	8	11	9

* Cells with an astrisks indicates that the L-foot must be oriented in the Y- direction as indicated in the image.

10 Highlighted cell indicate 3-rail system span. Contact Unirac Engineering Services for support.

~~10~~ Highlighted cell with strikethrough indicate 3-rail system span and module clamp allowable capacity exceeds with 3-rails. 4-Rail system required. Contact Unirac Engineering Services for support.

UNIRAC

ASCE 7-22	II	30 ft	Ss = 3.00	19 sq.ft	LANDSCAPE	CROSS-SLOPE	NXT	NXT COMBO	Stronghold BUTYL OSB
Design Standard	Risk Category	Roof Height	Seismic	Module Area	Orientation	Rail Direction	Rail Type	Clamp	Attachment

SPAN TABLES

Maximum Allowable Rail Spans for Rooftop Solar Panels Parallel to the Roof Surface (inches)

Ground Snow Load (psf)	Wind Exposure Category	Roof Tilt Angle (deg)	Panel Exposure	Basic Wind Speed (mph)																																						
				90			95			100			105			110			115			120			130			140			150			160			170			180		
				Roof Wind Zone																																						
				1	2	3	1	2	3	1	2	3	1	2	3	1	2	3	1	2	3	1	2	3	1	2	3	1	2	3	1	2	3	1	2	3	1	2	3	1	2	3
30	B	0-7	Interior	27	27	27	27	27	27	27	27	27	27	27	27	27	27	27	27	27	27	27	27	27	27	27	25	27	27	21	27	26	18	27	23	16	27	20	14	24	17	12
			Exposed	27	27	27	27	27	27	27	27	27	27	27	25	27	27	23	27	27	21	27	27	19	27	23	16	27	19	14	23	17	12	20	15	10	18	13	9	16	11	12
		7-20	Interior	27	27	27	27	27	27	27	27	27	27	27	27	27	27	27	27	27	27	27	27	26	27	27	22	27	25	19	27	22	16	26	19	14	23	17	12	20	15	11
			Exposed	27	27	27	27	27	27	27	27	25	27	27	22	27	27	20	27	25	18	27	23	17	26	19	14	22	16	12	19	14	10	17	12	9	15	11	12	13	10	11
		20-27	Interior	35	35	35	35	35	35	35	35	35	35	35	35	35	35	35	35	35	34	35	35	31	35	32	26	35	27	22	35	24	19	35	20	17	31	18	15	28	16	13
			Exposed	35	35	35	35	35	33	35	35	30	35	33	27	35	30	24	35	27	22	35	25	20	35	21	17	31	18	15	26	15	13	23	13	11	20	12	10	18	10	9
		27-45	Interior	39	39	39	39	39	39	39	39	39	39	39	39	39	39	39	39	39	39	39	39	37	39	39	32	38	34	27	33	30	23	29	26	20	25	23	18	22	20	16
			Exposed	39	39	39	39	39	39	39	39	36	39	39	32	39	37	29	38	34	27	34	31	24	29	26	21	25	22	18	21	19	15	19	17	13	16	15	12	15	13	10
	C	0-7	Interior	27	27	27	27	27	27	27	27	27	27	27	27	27	27	24	27	27	22	27	27	20	27	24	17	27	21	14	25	18	12	21	15	11	19	14	10	17	12	8
			Exposed	27	27	24	27	27	21	27	27	19	27	25	17	27	22	16	27	20	14	26	19	13	22	16	11	18	13	9	16	11	8	14	10	11	12	9	9	11	12	8
		7-20	Interior	27	27	27	27	27	27	27	27	26	27	27	23	27	27	21	27	26	19	27	24	18	27	20	15	24	17	13	21	15	11	18	13	10	16	11	8	14	10	11
			Exposed	27	27	21	27	26	19	27	23	17	27	21	15	26	19	14	24	17	13	21	16	11	18	13	10	15	11	8	13	10	11	12	8	9	10	11	8	9	10	7
		20-27	Interior	35	35	35	35	35	35	35	35	32	35	35	28	35	31	26	35	28	23	35	26	21	35	22	18	32	19	15	28	16	13	24	14	12	21	12	10	19	11	9
			Exposed	35	31	26	35	28	23	35	25	20	35	22	18	35	20	17	32	18	15	29	17	14	25	14	12	21	12	10	18	10	9	16	9	11	14	8	10	12	11	9
		27-45	Interior	39	39	39	39	39	39	39	39	38	39	39	34	39	39	31	38	36	28	36	33	26	31	28	22	26	24	19	23	20	16	20	18	14	17	16	12	15	14	11
			Exposed	39	39	31	39	35	27	35	31	25	31	28	22	29	25	20	26	23	18	24	21	17	20	18	14	17	15	12	15	13	10	13	12	9	11	10	12	10	9	11
	D	0-7	Interior	27	27	27	27	27	27	27	27	25	27	27	22	27	27	20	27	26	18	27	24	17	27	20	14	24	17	12	20	15	10	18	13	9	16	11	12	14	10	11
			Exposed	27	27	20	27	25	18	27	23	16	27	20	14	26	19	13	23	17	12	21	15	11	18	13	9	15	11	12	13	10	10	11	8	9	10	11	8	9	10	7
		7-20	Interior	27	27	27	27	27	24	27	27	22	27	27	19	27	24	18	27	22	16	27	20	15	23	17	12	20	14	11	17	12	9	15	11	12	13	9	11	12	8	9
			Exposed	27	24	18	27	21	16	26	19	14	24	17	13	21	16	11	19	14	10	18	13	10	15	11	12	13	9	10	11	12	9	10	11	8	8	9	7	11	8	6
		20-27	Interior	36	36	33	36	36	29	36	32	26	36	29	24	36	26	21	36	24	19	36	22	18	31	18	15	27	16	13	23	13	11	20	12	10	18	10	8	16	9	11
			Exposed	36	26	21	36	23	19	36	21	17	32	19	15	29	17	14	26	15	13	24	14	12	20	12	10	17	10	8	15	9	11	13	12	10	11	10	8	10	9	7
		27-45	Interior	41	41	39	41	41	35	41	40	31	40	36	28	36	33	26	33	30	23	30	27	21	26	23	18	22	20	15	19	17	13	16	15	12	14	13	10	13	11	9
			Exposed	36	32	26	32	29	23	29	26	20	26	23	18	24	21	17	22	19	15	20	18	14	17	15	12	14	13	10	12	11	9	11	10	12	9	8	10	8	11	9
40	B	0-7	Interior	25	25	25	25	25	25	25	25	25	25	25	25	25	25	25	25	25	25	25	25	25	25	25	21	25	25	21	25	25	18	25	23	16	25	20	14	24	17	12
			Exposed	25	25	25	25	25	25	25	25	25	25	25	25	25	25	23	25	25	21	25	25	19	25	23	16	25	19	14	23	17	12	20	15	10	18	13	9	16	11	12
		7-20	Interior	26	26	26	26	26	26	26	26	26	26	26	26	26	26	26	26	26	26	26	26	26	26	26	22	26	25	19	26	22	16	26	19	14	23	17	12	20	15	11
			Exposed	26	26	26	26	26	26	26	26	25	26	26	22	26	26	20	26	25	18	26	23	17	26	19	14	22	16	12	19	14	10	17	12	9	15	11	12	13	10	11
		20-27	Interior	29	29	29	29	29	29	29	29	29	29	29	29	29	29	29	29	29	29	29	29	29	29	29	26	29	27	22	29	24	19	29	20	17	29	18	15	28	16	13
			Exposed	29	29	29	29	29	29	29	29	29	29	29	27	29	29	24	29	27	22	29	25	20	29	21	17	29	18	15	26	15	13	23	13	11	20	12	10	18	10	9
		27-45	Interior	34	34	34	34	34	34	34	34	34	34	34	34	34	34	34	34	34	34	34	34	34	34	34	32	33	33	27	31	30	23	29	26	20	25	23	18	22	20	16
			Exposed	34	34	34	34	34	34	34	34	34	34	34	32	34	34	29	34	34	27	34	31	24	29	26	21	25	22	18	21	19	15	19	17	13	16	15	12	15	13	10
	C	0-7	Interior	25	25	25	25	25	25	25	25	25	25	25	25	25	25	24	25	25	22	25	25	20	25	24	17	25	21	14	25	18	12	21	15	11	19	14	10	17	12	8
			Exposed	25	25	24	25	25	21	25	25	19	25	25	17	25	22	16	25	20	14	25	19	13	22	16	11	18	13	9	16	11	8	14	10	11	12	9	9	11	12	8
		7-20	Interior	26	26	26	26	26	26	26	26	26	26	26	23	26	26	21	26	26	19	26	24	18	26	20	15	24	17	13	21	15	11	18	13	10	16	11	8	14	10	11
			Exposed	26	26	21	26	26	19	26	23	17	26	21	15	26	19	14	24	17	13	21	16	11	18	13	10	15	11	8	13	10	11	12	8	9	10	11	8	9	10	7
		20-27	Interior	29	29	29	29	29	29	29	29	29	29	29	28	29	29	26	29	28	23	29	26	21	29	22	18	29	19	15	28	16	13	24	14	12	21	12	10	19	11	9
			Exposed	29	29	26	29	28	23	29	25	20	29	22	18	29	20	17	29	18	15	29	17	14	25	14	12	21	12	10	18	10	9	16	9	11	14	8	10	12	11	9
		27-45	Interior	34	34	34	34	34	34	34	34	34	34	34	34	34	34	31	33	33	28	32	32	26	30	28	22	26	24	19	23	20	16	20	18	14	17	16	12	15	14	11
			Exposed	34	34	31	34	34	27	34	31	25	31	28	22	29	25	20	26	23	18	24	21	17	20	18	14	17	15	12	15	13	10	13	12	9	11	10	12	10	9	11
	D	0-7	Interior	27	27	27	27	27	27	27	27	25	27	27	22	27	27	20	27	26	18	27	24	17	27	20	14	24	17	12	20	15	10	18	13	9	16	11	12	14	10	11
			Exposed	27	27	20	27	25	18	27	23	16	27	20	14	26	19	13	23	17	12	21	15	11	18	13	9	15	11	12	13	10	10	11	8	9	10	11	8	9	10	7
		7-20	Interior	27	27	27	27	27	24	27	27	22	27	27	19	27	24	18	27	22	16	27	20	15	23	17	12	20	14	11	17	12	9	15	11	12	13	9	11	12	8	9
			Exposed	27	24	18	27	21	16	26	19	14	24	17	13	21	16	11	19	14	10	18	13	10	15	11	12	13	9	10	11	12	9	10	11	8	8	9	7	11	8	6
		20-27	Interior	31	31	31	31	31	29	31	31	26	31	29	24	31	26	21	31	24	19	31	22	18	31	18	15	27	16	13	23	13	11	20	12	10	18	10	8	16	9	11
			Exposed	31	26	21	31	23	19	31	21	17	31	19	15	29	17	14	26	15	13	24	14	12	20	12	10	17	10	8	15	9	11	13	12	10	11	10	8	10	9	7
		27-45	Interior	36	36	36	36	36	35	36	36	31	35	35	28	34	33	26	33	30	23	30	27	21	26	23	18	22	20	15	19	17	13	16	15	12	14	13	10	13	11	9
			Exposed	36	32	26	32	29	23	29	26	20	26	23	18	24	21	17	22	19	15	20	18	14	17	15	12	14	13	10	12	11	9	11	10	12	9	8	10	8	11	9
50	B	0-7	Interior	22	22	22	22	22	22	22	22	22	22	22	22	22	22	22	22	22	22	22	22	22	22	22	21	22	22	21	22	22	18	22	22	16	22	20	14	22	17	12
			Exposed	22	22	22	22	22	22	22	22	22	22	22	22	22	22	22	22	22	21	22	22	19	22	22	16	22	19	14	22	17	12	20	15	10	18	13	9	16	11	12
		7-20	Interior	22	22	22	22	22	22	22	22	22	22	22	22	22	22	22	22	22	22	22	22	22	22	22	22	22	22	19	22	22	16	22	19	14	22	17	12	20	15	11
			Exposed	22	22	22	22	22	22	22	22	22	22	22	22	22	22	20	22	22	18	22	22	17	22	19	14	22	16	12	19	14	10	17	12	9	15	11	12	13	10	11
		20-27	Interior	26	26	26	26	26	26	26	26	26	26	26	26	26	26	26	26	26	26	26	26	26	26	26	22	26	24	19	26	20	17	25	18	15	24	16	13	24	16	13
			Exposed	26	26	26	26	26	26	26	26	26	26	26	26	26	26	24	26	26	22	26	25	20	26	21	17	26	18	15	26	15	13	23	13	11	20	12	10	18	10	9
		27-45	Interior	30	30	30	30	30	30	30	30	30	30	30	30	30	30	30	30	30	30	30	30	30	30	30	30	29	29	27	28	28	23	26	26	20	25	23	18	22	20	16
			Exposed	30	30	30	30	30	30	30	30	30	30	30	30	30	30	29	30	30	27	30	30	24	29	26	21	25	22	18	21	19	15	19	17	13	16	15	12	15	13	10
	C	0-7	Interior	22	22	22	22	22	22	22	22	22	22	22	22	22	22	22	22	22	22	22	22	20	22	22	17	22	21	14	22	18	12	21	15	11	19	14	10	17	12	8
			Exposed	22	22	22	22	22	21	22	22	19	22	22	17	22	22	16	22	20	14	22	19	13	22	16	11	18	13	9	16	11	8	14	10	11	12	9	9	11	12	8
		7-20	Interior	22	22	22	22	22	22	22	22	22	22	22	22	22	22	21	22	22	19	22	22	18	22	20	15	22	17	13	21	15	11	18	13	10	16	11	8	14	10	11
			Exposed	22	22	21	22	22	19	22	22	17	22	21	15	22	19	14	22	17	13	21	16	11	18	13	10	15	11	8	13	10	11	12	8	9	10	11	8	9	10	7
		20-27	Interior	26	26	26	26	26	26	26	26	26	26	26	26	26	26	26	26	26	23	26	26	21	26	22	18	25	19	15	24	16	13	23	14	12	21	12	10	19	11	9
			Exposed	26	26	26	26	26	23	26	25	20	26	22	18	26	20	17	26	18	15	26	17	14	25	14	12	21	12	10	18	10	9	16	9	11	14	8	10	12	11	9
		27-45	Interior	30	30	30	30	30	30	30	30	30	30	30	30	30	30	30	29	29	28	29	29	26	27	27	22	25	24	19	23	20	16	20	18	14	17	16	12	15	14	11
			Exposed	30	30	30	30	30	27	30	30	25	30	28	22	29	25	20	26	23	18	24	21	17	20	18	14	17	15	12	15	13	10	13	12	9	11	10	12	10	9	11
	D	0-7	Interior	23	23	23	23	23	23	23	23	23	23	23	22	23	23	20	23	23	18	23	23	17	23	20	14	23	17	12	20	15	10	18	13	9	16	11	12	14	10	11
			Exposed	23	23	20	23	23	18	23	23	16	23	20	14	23	19	13	23	17	12	21	15	11	18	13	9	15	11	12	13	10	10	11	8	9	10	11	8	9	10	7
		7-20	Interior	24	24	24	24	24	24	24	24	22	24	24	19	24	24	18	24	22	16	24	20	15	23	17	12	20	14	11	17	12	9	15	11	12	13	9	11	12	8	9
			Exposed	24	24	18	24	21	16	24	19	14	24	17	13	21	16	11	19	14	10	18	13	10	15	11	12	13	9	10	11	12	9	10	11	8	8	9	7	11	8	6
		20-27	Interior	27	27	27	27	27	27	27	27	26	27	27	24	27	26	21	27	24	19	27	22	18	27	18	15	26	16	13	23	13	11	20	12	10	18	10	8	16	9	11
			Exposed	27	26	21	27	23	19	27	21	17	27	19	15	27	17	14	26	15	13	24	14	12	20	12	10	17	10	8	15	9	11	13	12	10	11	10	8	10	9	7
		27-45	Interior	32	32	32	32	32	32	32	32	31	31	31	28	30	30	26	29	29	23	28	27	21	26	23	18	22	20	15	19	17	13	16	15	12	14	13	10	13	11	9
			Exposed	32	32	26	32	29	23	29	26	20	26	23	18	24	21	17	22	19	15	20	18	14	17	15	12	14	13	10	12	11	9	11	10	12	9	8	10	8	11	9

* Cells with an astrisks indicates that the L-foot must be oriented in the Y- direction as indicated in the image.

10 Highlighted cell indicate 3-rail system span. Contact Unirac Engineering Services for support.

~~10~~ Highlighted cell with strikethrough indicate 3-rail system span and module clamp allowable capacity exceeds with 3-rails. 4-Rail system required. Contact Unirac Engineering Services for support.

UNIRAC

ASCE 7-22	II	30 ft	Ss = 3.00	19 sq.ft	LANDSCAPE	CROSS-SLOPE	NXT	NXT COMBO	Stronghold BUTYL OSB
Design Standard	Risk Category	Roof Height	Seismic	Module Area	Orientation	Rail Direction	Rail Type	Clamp	Attachment

SPAN TABLES

Maximum Allowable Rail Spans for Rooftop Solar Panels Parallel to the Roof Surface (inches)

Ground Snow Load (psf)	Wind Exposure Category	Roof Tilt Angle (deg)	Panel Exposure	Basic Wind Speed (mph) 90			95			100			105			110			115			120			130			140			150			160			170			180		
			Roof Wind Zone	1	2	3	1	2	3	1	2	3	1	2	3	1	2	3	1	2	3	1	2	3	1	2	3	1	2	3	1	2	3	1	2	3	1	2	3	1	2	3
60	B	0-7	Interior	18	18	18	18	18	18	18	18	18	18	18	18	18	18	18	18	18	18	18	18	18	18	18	18	18	18	18	18	18	18	18	18	16	18	18	14	18	17	12
			Exposed	18	18	18	18	18	18	18	18	18	18	18	18	18	18	18	18	18	18	18	18	18	18	18	16	18	18	14	18	17	12	18	15	10	18	13	9	16	11	12
		7-20	Interior	18	18	18	18	18	18	18	18	18	18	18	18	18	18	18	18	18	18	18	18	18	18	18	18	18	18	18	18	18	16	18	18	14	18	17	12	18	15	11
			Exposed	18	18	18	18	18	18	18	18	18	18	18	18	18	18	18	18	18	18	18	18	17	18	18	14	18	16	12	18	14	10	17	12	9	15	11	12	13	10	11
		20-27	Interior	23	23	23	23	23	23	23	23	23	23	23	23	23	23	23	23	23	23	23	23	23	23	23	23	23	23	22	23	23	19	23	20	17	22	18	15	21	16	13
			Exposed	23	23	23	23	23	23	23	23	23	23	23	23	23	23	23	23	23	22	23	23	20	23	21	17	23	18	15	23	15	13	23	13	11	20	12	10	18	10	9
		27-45	Interior	27	27	27	27	27	27	27	27	27	27	27	27	27	27	27	27	27	27	27	27	27	27	27	27	26	26	26	25	25	23	24	24	20	23	23	18	22	20	16
			Exposed	27	27	27	27	27	27	27	27	27	27	27	27	27	27	27	27	27	27	27	27	24	27	26	21	25	22	18	21	19	15	19	17	13	16	15	12	15	13	10
	C	0-7	Interior	18	18	18	18	18	18	18	18	18	18	18	18	18	18	18	18	18	18	18	18	18	18	18	17	18	18	14	18	18	12	18	15	11	18	14	10	17	12	8
			Exposed	18	18	18	18	18	18	18	18	18	18	18	17	18	18	16	18	18	14	18	18	13	18	16	11	18	13	9	16	11	8	14	10	11	12	9	9	11	12	8
		7-20	Interior	18	18	18	18	18	18	18	18	18	18	18	18	18	18	18	18	18	18	18	18	18	18	18	15	18	17	13	18	15	11	18	13	10	16	11	8	14	10	11
			Exposed	18	18	18	18	18	18	18	18	17	18	18	15	18	18	14	18	17	13	18	16	11	18	13	10	15	11	8	13	10	11	12	8	9	10	11	8	9	10	~~7~~
		20-27	Interior	23	23	23	23	23	23	23	23	23	23	23	23	23	23	23	23	23	23	23	23	21	23	22	18	22	19	15	22	16	13	21	14	12	20	12	10	19	11	9
			Exposed	23	23	23	23	23	23	23	23	20	23	22	18	23	20	17	23	18	15	23	17	14	23	14	12	21	12	10	18	10	9	16	9	11	14	8	10	12	11	9
		27-45	Interior	27	27	27	27	27	27	27	27	27	27	27	27	27	27	27	26	26	26	26	26	26	24	24	22	23	23	19	22	20	16	20	18	14	17	16	12	15	14	11
			Exposed	27	27	27	27	27	27	27	27	25	27	27	22	27	25	20	26	23	18	24	21	17	20	18	14	17	15	12	15	13	10	13	12	9	11	10	12	10	9	11
	D	0-7	Interior	20	20	20	20	20	20	20	20	20	20	20	20	20	20	20	20	20	18	20	20	17	20	20	14	20	17	12	20	15	10	18	13	9	16	11	12	14	10	11
			Exposed	20	20	20	20	20	18	20	20	16	20	20	14	20	19	13	20	17	12	20	15	11	18	13	9	15	11	12	13	10	10	11	8	9	10	11	~~8~~	9	10	~~7~~
		7-20	Interior	20	20	20	20	20	20	20	20	20	20	20	19	20	20	18	20	20	16	20	20	15	20	17	12	20	14	11	17	12	9	15	11	12	13	9	11	12	8	9
			Exposed	20	20	18	20	20	16	20	19	14	20	17	13	20	16	11	19	14	10	18	13	10	15	11	12	13	9	10	11	12	9	10	11	~~8~~	8	9	~~7~~	11	8	~~6~~
		20-27	Interior	24	24	24	24	24	24	24	24	24	24	24	24	24	24	21	24	24	19	24	22	18	24	18	15	23	16	13	22	13	11	20	12	10	18	10	8	16	9	11
			Exposed	24	24	21	24	23	19	24	21	17	24	19	15	24	17	14	24	15	13	24	14	12	20	12	10	17	10	8	15	9	11	13	12	10	11	10	8	10	9	~~7~~
		27-45	Interior	29	29	29	29	29	29	29	29	29	28	28	28	27	27	26	27	27	23	26	26	21	24	23	18	22	20	15	19	17	13	16	15	12	14	13	10	13	11	9
			Exposed	29	29	26	29	29	23	29	26	20	26	23	18	24	21	17	22	19	15	20	18	14	17	15	12	14	13	10	12	11	9	11	10	12	9	8	10	8	11	9
70	B	0-7	Interior	16	16	16	16	16	16	16	16	16	16	16	16	16	16	16	16	16	16	16	16	16	16	16	16	16	16	16	16	16	16	16	16	16	16	16	14	16	16	12
			Exposed	16	16	16	16	16	16	16	16	16	16	16	16	16	16	16	16	16	16	16	16	16	16	16	16	16	16	14	16	16	12	16	15	10	16	13	9	16	11	12
		7-20	Interior	16	16	16	16	16	16	16	16	16	16	16	16	16	16	16	16	16	16	16	16	16	16	16	16	16	16	16	16	16	16	16	16	14	16	16	12	16	15	11
			Exposed	16	16	16	16	16	16	16	16	16	16	16	16	16	16	16	16	16	16	16	16	16	16	16	14	16	16	12	16	14	10	16	12	9	15	11	12	13	10	11
		20-27	Interior	20	20	20	20	20	20	20	20	20	20	20	20	20	20	20	20	20	20	20	20	20	20	20	20	20	20	20	20	20	19	20	20	17	20	18	15	19	16	13
			Exposed	20	20	20	20	20	20	20	20	20	20	20	20	20	20	20	20	20	20	20	20	20	20	20	17	20	18	15	20	15	13	20	13	11	20	12	10	18	10	9
		27-45	Interior	24	24	24	24	24	24	24	24	24	24	24	24	24	24	24	24	24	24	24	24	24	24	24	24	24	24	24	23	23	23	22	22	20	21	21	18	20	20	16
			Exposed	24	24	24	24	24	24	24	24	24	24	24	24	24	24	24	24	24	24	24	24	24	24	24	21	24	22	18	21	19	15	19	17	13	16	15	12	15	13	10
	C	0-7	Interior	16	16	16	16	16	16	16	16	16	16	16	16	16	16	16	16	16	16	16	16	16	16	16	16	16	16	14	16	16	12	16	15	11	16	14	10	16	12	8
			Exposed	16	16	16	16	16	16	16	16	16	16	16	16	16	16	16	16	16	14	16	16	13	16	16	11	16	13	9	16	11	8	14	10	11	12	9	9	11	12	8
		7-20	Interior	16	16	16	16	16	16	16	16	16	16	16	16	16	16	16	16	16	16	16	16	16	16	16	15	16	16	13	16	15	11	16	13	10	16	11	8	14	10	11
			Exposed	16	16	16	16	16	16	16	16	16	16	16	15	16	16	14	16	16	13	16	16	11	16	13	10	15	11	8	13	10	11	12	8	9	10	11	8	9	10	~~7~~
		20-27	Interior	20	20	20	20	20	20	20	20	20	20	20	20	20	20	20	20	20	20	20	20	20	20	20	18	20	19	15	19	16	13	19	14	12	18	12	10	17	11	9
			Exposed	20	20	20	20	20	20	20	20	20	20	20	18	20	20	17	20	18	15	20	17	14	20	14	12	20	12	10	18	10	9	16	9	11	14	8	10	12	11	9
		27-45	Interior	24	24	24	24	24	24	24	24	24	24	24	24	24	24	24	24	24	24	23	23	23	22	22	22	21	21	19	20	20	16	19	18	14	17	16	12	15	14	11
			Exposed	24	24	24	24	24	24	24	24	24	24	24	22	24	24	20	24	23	18	23	21	17	20	18	14	17	15	12	15	13	10	13	12	9	11	10	12	10	9	11
	D	0-7	Interior	17	17	17	17	17	17	17	17	17	17	17	17	17	17	17	17	17	17	17	17	17	17	17	14	17	17	12	17	15	10	17	13	9	16	11	12	14	10	11
			Exposed	17	17	17	17	17	17	17	17	16	17	17	14	17	17	13	17	17	12	17	15	11	17	13	9	15	11	12	13	10	10	11	8	9	10	11	~~8~~	9	10	~~7~~
		7-20	Interior	18	18	18	18	18	18	18	18	18	18	18	18	18	18	18	18	18	16	18	18	15	18	17	12	18	14	11	17	12	9	15	11	12	13	9	11	12	8	9
			Exposed	18	18	18	18	18	16	18	18	14	18	17	13	18	16	11	18	14	10	18	13	10	15	11	12	13	9	10	11	12	9	10	11	~~8~~	8	9	~~7~~	11	8	~~6~~
		20-27	Interior	22	22	22	22	22	22	22	22	22	22	22	22	22	22	21	22	22	19	22	22	18	21	18	15	21	16	13	20	13	11	19	12	10	18	10	8	16	9	11
			Exposed	22	22	21	22	22	19	22	21	17	22	19	15	22	17	14	22	15	13	22	14	12	20	12	10	17	10	8	15	9	11	13	12	10	11	10	8	10	9	~~7~~
		27-45	Interior	26	26	26	26	26	26	26	26	26	26	26	26	25	25	25	24	24	23	24	24	21	22	22	18	21	20	15	19	17	13	16	15	12	14	13	10	13	11	9
			Exposed	26	26	26	26	26	23	26	26	20	26	23	18	24	21	17	22	19	15	20	18	14	17	15	12	14	13	10	12	11	9	11	10	12	9	8	10	8	11	9
80	B	0-7	Interior	14	14	14	14	14	14	14	14	14	14	14	14	14	14	14	14	14	14	14	14	14	14	14	14	14	14	14	14	14	14	14	14	14	14	14	14	14	14	12
			Exposed	14	14	14	14	14	14	14	14	14	14	14	14	14	14	14	14	14	14	14	14	14	14	14	14	14	14	14	14	14	12	14	14	10	14	13	9	14	11	12
		7-20	Interior	14	14	14	14	14	14	14	14	14	14	14	14	14	14	14	14	14	14	14	14	14	14	14	14	14	14	14	14	14	14	14	14	14	14	14	12	14	14	11
			Exposed	14	14	14	14	14	14	14	14	14	14	14	14	14	14	14	14	14	14	14	14	14	14	14	14	14	14	12	14	14	10	14	12	9	14	11	12	13	10	11
		20-27	Interior	17	17	17	17	17	17	17	17	17	17	17	17	17	17	17	17	17	17	17	17	17	17	17	17	17	17	17	17	17	17	17	17	17	17	17	15	17	16	13
			Exposed	17	17	17	17	17	17	17	17	17	17	17	17	17	17	17	17	17	17	17	17	17	17	17	17	17	17	15	17	15	13	17	13	11	17	12	10	17	10	9
		27-45	Interior	22	22	22	22	22	22	22	22	22	22	22	22	22	22	22	22	22	22	22	22	22	22	22	22	21	21	21	21	21	21	20	20	20	19	19	18	18	18	16
			Exposed	22	22	22	22	22	22	22	22	22	22	22	22	22	22	22	22	22	22	22	22	22	22	22	21	21	21	18	21	19	15	19	17	13	16	15	12	15	13	10
	C	0-7	Interior	14	14	14	14	14	14	14	14	14	14	14	14	14	14	14	14	14	14	14	14	14	14	14	14	14	14	14	14	14	12	14	14	11	14	14	10	14	12	8
			Exposed	14	14	14	14	14	14	14	14	14	14	14	14	14	14	14	14	14	14	14	14	13	14	14	11	14	13	9	14	11	8	14	10	11	12	9	9	11	12	8
		7-20	Interior	14	14	14	14	14	14	14	14	14	14	14	14	14	14	14	14	14	14	14	14	14	14	14	14	14	14	13	14	14	11	14	13	10	14	11	8	14	10	11
			Exposed	14	14	14	14	14	14	14	14	14	14	14	14	14	14	14	14	14	13	14	14	11	14	13	10	14	11	8	13	10	11	12	8	9	10	11	8	9	10	~~7~~
		20-27	Interior	17	17	17	17	17	17	17	17	17	17	17	17	17	17	17	17	17	17	17	17	17	17	17	17	17	17	15	17	16	13	17	14	12	17	12	10	16	11	9
			Exposed	17	17	17	17	17	17	17	17	17	17	17	17	17	17	17	17	17	15	17	17	14	17	14	12	17	12	10	17	10	9	16	9	11	14	8	10	12	11	9
		27-45	Interior	22	22	22	22	22	22	22	22	22	22	22	22	22	22	22	22	22	22	21	21	21	20	20	20	19	19	19	19	19	16	18	18	14	17	16	12	15	14	11
			Exposed	22	22	22	22	22	22	22	22	22	22	22	22	22	22	20	22	22	18	21	21	17	20	18	14	17	15	12	15	13	10	13	12	9	11	10	12	10	9	11
	D	0-7	Interior	15	15	15	15	15	15	15	15	15	15	15	15	15	15	15	15	15	15	15	15	15	15	15	14	15	15	12	15	15	10	15	13	9	15	11	12	14	10	11
			Exposed	15	15	15	15	15	15	15	15	15	15	15	14	15	15	13	15	15	12	15	15	11	15	13	9	15	11	12	13	10	10	11	8	9	10	11	~~8~~	9	10	~~7~~
		7-20	Interior	15	15	15	15	15	15	15	15	15	15	15	15	15	15	15	15	15	15	15	15	15	15	15	12	15	14	11	15	12	9	15	11	12	13	9	11	12	8	9
			Exposed	15	15	15	15	15	15	15	15	14	15	15	13	15	15	11	15	14	10	15	13	10	15	11	12	13	9	10	11	12	9	10	11	~~8~~	8	9	~~7~~	11	8	~~6~~
		20-27	Interior	19	19	19	19	19	19	19	19	19	19	19	19	19	19	19	19	19	19	19	19	18	19	18	15	19	16	13	18	13	11	18	12	10	17	10	8	16	9	11
			Exposed	19	19	19	19	19	19	19	19	17	19	19	15	19	17	14	19	15	13	19	14	12	19	12	10	17	10	8	15	9	11	13	12	10	11	10	8	10	9	~~7~~
		27-45	Interior	24	24	24	24	24	24	24	24	24	23	23	23	23	23	23	22	22	22	22	22	21	21	21	18	19	19	15	18	17	13	16	15	12	14	13	10	13	11	9
			Exposed	24	24	24	24	24	23	24	24	20	23	23	18	23	21	17	22	19	15	20	18	14	17	15	12	14	13	10	12	11	9	11	10	12	9	8	10	8	11	9

*	Cells with an astrisks indicates that the L-foot must be oriented in the Y- direction as indicated in the image.
10	Highlighted cell indicate 3-rail system span. Contact Unirac Engineering Services for support.
~~10~~	Highlighted cell with strikethrough indicate 3-rail system span and module clamp allowable capacity exceeds with 3-rails. 4-Rail system required. Contact Unirac Engineering Services for support.

UNIRAC

ASCE 7-22	II	30 ft	Ss = 3.00	19 sq.ft	LANDSCAPE	CROSS-SLOPE	NXT	NXT COMBO	Stronghold BUTYL OSB
Design Standard	Risk Category	Roof Height	Seismic	Module Area	Orientation	Rail Direction	Rail Type	Clamp	Attachment

SPAN TABLES

Maximum Allowable Rail Spans for Rooftop Solar Panels Parallel to the Roof Surface (inches)

Ground Snow Load (psf)	Wind Exposure Category	Roof Tilt Angle (deg)	Panel Exposure	Basic Wind Speed (mph)																																						
				90			95			100			105			110			115			120			130			140			150			160			170			180		
				Roof Wind Zone																																						
				1	2	3	1	2	3	1	2	3	1	2	3	1	2	3	1	2	3	1	2	3	1	2	3	1	2	3	1	2	3	1	2	3	1	2	3	1	2	3
90	B	0-7	Interior	12	12	12	12	12	12	12	12	12	12	12	12	12	12	12	12	12	12	12	12	12	12	12	12	12	12	12	12	12	12	12	12	12	12	12	12	12	12	12
			Exposed	12	12	12	12	12	12	12	12	12	12	12	12	12	12	12	12	12	12	12	12	12	12	12	12	12	12	12	12	12	12	12	12	10	12	12	9	12	11	12
		7-20	Interior	12	12	12	12	12	12	12	12	12	12	12	12	12	12	12	12	12	12	12	12	12	12	12	12	12	12	12	12	12	12	12	12	12	12	12	12	12	12	11
			Exposed	12	12	12	12	12	12	12	12	12	12	12	12	12	12	12	12	12	12	12	12	12	12	12	12	12	12	12	12	12	10	12	12	9	12	11	12	12	10	11
		20-27	Interior	15	15	15	15	15	15	15	15	15	15	15	15	15	15	15	15	15	15	15	15	15	15	15	15	15	15	15	15	15	15	15	15	15	15	15	15	15	15	13
			Exposed	15	15	15	15	15	15	15	15	15	15	15	15	15	15	15	15	15	15	15	15	15	15	15	15	15	15	15	15	15	13	15	13	11	15	12	10	15	10	9
		27-45	Interior	20	20	20	20	20	20	20	20	20	20	20	20	20	20	20	20	20	20	20	20	20	20	20	20	20	20	20	19	19	19	18	18	18	18	18	18	17	17	16
			Exposed	20	20	20	20	20	20	20	20	20	20	20	20	20	20	20	20	20	20	20	20	20	20	20	20	20	20	18	19	19	15	18	17	13	16	15	12	15	13	10
	C	0-7	Interior	12	12	12	12	12	12	12	12	12	12	12	12	12	12	12	12	12	12	12	12	12	12	12	12	12	12	12	12	12	12	12	12	11	12	12	10	12	12	8
			Exposed	12	12	12	12	12	12	12	12	12	12	12	12	12	12	12	12	12	12	12	12	12	12	12	11	12	12	9	12	11	8	12	10	11	12	9	9	11	12	8
		7-20	Interior	12	12	12	12	12	12	12	12	12	12	12	12	12	12	12	12	12	12	12	12	12	12	12	12	12	12	12	12	12	11	12	12	10	12	11	8	12	10	11
			Exposed	12	12	12	12	12	12	12	12	12	12	12	12	12	12	12	12	12	12	12	12	11	12	12	10	12	11	8	12	10	11	12	8	9	10	11	8	9	10	7
		20-27	Interior	15	15	15	15	15	15	15	15	15	15	15	15	15	15	15	15	15	15	15	15	15	15	15	15	15	15	15	15	15	13	15	14	12	15	12	10	15	11	9
			Exposed	15	15	15	15	15	15	15	15	15	15	15	15	15	15	15	15	15	15	15	15	14	15	14	12	15	12	10	15	10	9	15	9	11	14	8	10	12	11	9
		27-45	Interior	20	20	20	20	20	20	20	20	20	20	20	20	20	20	20	20	20	20	20	20	20	19	19	19	18	18	18	17	17	16	16	16	14	16	16	12	15	14	11
			Exposed	20	20	20	20	20	20	20	20	20	20	20	20	20	20	20	20	20	18	20	20	17	19	18	14	17	15	12	15	13	10	13	12	9	11	10	12	10	9	11
	D	0-7	Interior	14	14	14	14	14	14	14	14	14	14	14	14	14	14	14	14	14	14	14	14	14	14	14	14	14	14	12	14	14	10	14	13	9	14	11	12	14	10	11
			Exposed	14	14	14	14	14	14	14	14	14	14	14	14	14	14	13	14	14	12	14	14	11	14	13	9	14	11	12	13	10	10	11	8	9	10	11	8	9	10	7
		7-20	Interior	14	14	14	14	14	14	14	14	14	14	14	14	14	14	14	14	14	14	14	14	14	14	14	12	14	14	11	14	12	9	14	11	12	13	9	11	12	8	9
			Exposed	14	14	14	14	14	14	14	14	14	14	14	13	14	14	11	14	14	10	14	13	10	14	11	12	13	9	10	11	12	9	10	11	8	8	9	7	11	8	6
		20-27	Interior	17	17	17	17	17	17	17	17	17	17	17	17	17	17	17	17	17	17	17	17	17	17	17	15	17	16	13	17	13	11	16	12	10	16	10	8	15	9	11
			Exposed	17	17	17	17	17	17	17	17	17	17	17	15	17	17	14	17	15	13	17	14	12	17	12	10	17	10	8	15	9	11	13	12	10	11	10	8	10	9	7
		27-45	Interior	22	22	22	22	22	22	22	22	22	22	22	22	21	21	21	21	21	21	20	20	20	19	19	18	18	18	15	17	17	13	16	15	12	14	13	10	13	11	9
			Exposed	22	22	22	22	22	22	22	22	20	22	22	18	21	21	17	21	19	15	20	18	14	17	15	12	14	13	10	12	11	9	11	10	12	9	8	10	8	11	9
100	B	0-7	Interior	11	11	11	11	11	11	11	11	11	11	11	11	11	11	11	11	11	11	11	11	11	11	11	11	11	11	11	11	11	11	11	11	11	11	11	11	11	11	11
			Exposed	11	11	11	11	11	11	11	11	11	11	11	11	11	11	11	11	11	11	11	11	11	11	11	11	11	11	11	11	11	11	11	11	10	11	11	9	11	11	12
		7-20	Interior	11	11	11	11	11	11	11	11	11	11	11	11	11	11	11	11	11	11	11	11	11	11	11	11	11	11	11	11	11	11	11	11	11	11	11	11	11	11	11
			Exposed	11	11	11	11	11	11	11	11	11	11	11	11	11	11	11	11	11	11	11	11	11	11	11	11	11	11	11	11	11	10	11	11	9	11	11	12	11	10	11
		20-27	Interior	14	14	14	14	14	14	14	14	14	14	14	14	14	14	14	14	14	14	14	14	14	14	14	14	14	14	14	14	14	14	14	14	14	14	14	14	14	14	13
			Exposed	14	14	14	14	14	14	14	14	14	14	14	14	14	14	14	14	14	14	14	14	14	14	14	14	14	14	14	14	14	13	14	13	11	14	12	10	14	10	9
		27-45	Interior	18	18	18	18	18	18	18	18	18	18	18	18	18	18	18	18	18	18	18	18	18	18	18	18	18	18	18	18	18	18	17	17	17	17	17	17	16	16	16
			Exposed	18	18	18	18	18	18	18	18	18	18	18	18	18	18	18	18	18	18	18	18	18	18	18	18	18	18	18	18	18	15	17	17	13	16	15	12	15	13	10
	C	0-7	Interior	11	11	11	11	11	11	11	11	11	11	11	11	11	11	11	11	11	11	11	11	11	11	11	11	11	11	11	11	11	11	11	11	11	11	11	10	11	11	8
			Exposed	11	11	11	11	11	11	11	11	11	11	11	11	11	11	11	11	11	11	11	11	11	11	11	9	11	11	8	11	10	11	11	9	9	11	12	8	11	10	11
		7-20	Interior	11	11	11	11	11	11	11	11	11	11	11	11	11	11	11	11	11	11	11	11	11	11	11	11	11	11	11	11	11	11	11	11	10	11	11	8	11	10	11
			Exposed	11	11	11	11	11	11	11	11	11	11	11	11	11	11	11	11	11	11	11	11	11	11	11	10	11	11	8	11	10	11	11	8	9	10	11	8	9	10	7
		20-27	Interior	14	14	14	14	14	14	14	14	14	14	14	14	14	14	14	14	14	14	14	14	14	14	14	14	14	14	14	14	14	13	14	14	12	14	12	10	14	11	9
			Exposed	14	14	14	14	14	14	14	14	14	14	14	14	14	14	14	14	14	14	14	14	14	14	14	12	14	12	10	14	10	9	14	9	11	14	8	10	12	11	9
		27-45	Interior	18	18	18	18	18	18	18	18	18	18	18	18	18	18	18	18	18	18	18	18	18	17	17	17	17	17	17	16	16	16	15	15	14	15	15	12	14	14	11
			Exposed	18	18	18	18	18	18	18	18	18	18	18	18	18	18	18	18	18	18	18	18	17	17	17	14	17	15	12	15	13	10	13	12	9	11	10	12	10	9	11
	D	0-7	Interior	12	12	12	12	12	12	12	12	12	12	12	12	12	12	12	12	12	12	12	12	12	12	12	12	12	12	12	12	12	10	12	12	9	12	11	12	12	10	11
			Exposed	12	12	12	12	12	12	12	12	12	12	12	12	12	12	12	12	12	12	12	12	11	12	12	9	12	11	12	12	10	10	11	8	9	10	11	8	9	10	7
		7-20	Interior	12	12	12	12	12	12	12	12	12	12	12	12	12	12	12	12	12	12	12	12	12	12	12	12	12	12	11	12	12	9	12	11	12	12	9	11	12	8	9
			Exposed	12	12	12	12	12	12	12	12	12	12	12	12	12	12	11	12	12	10	12	12	10	12	11	12	12	9	10	11	12	9	10	11	8	8	9	7	11	8	6
		20-27	Interior	15	15	15	15	15	15	15	15	15	15	15	15	15	15	15	15	15	15	15	15	15	15	15	15	15	15	13	15	13	11	15	12	10	15	10	8	14	9	11
			Exposed	15	15	15	15	15	15	15	15	15	15	15	15	15	15	14	15	15	13	15	14	12	15	12	10	15	10	8	15	9	11	13	12	10	11	10	8	10	9	7
		27-45	Interior	20	20	20	20	20	20	20	20	20	20	20	20	20	20	20	19	19	19	19	19	19	18	18	18	17	17	15	16	16	13	15	15	12	14	13	10	13	11	9
			Exposed	20	20	20	20	20	20	20	20	20	20	20	18	20	20	17	19	19	15	19	18	14	17	15	12	14	13	10	12	11	9	11	10	12	9	8	10	8	11	9

* Cells with an astrisks indicates that the L-foot must be oriented in the Y- direction as indicated in the image.

10 Highlighted cell indicate 3-rail system span. Contact Unirac Engineering Services for support.

~~10~~ Highlighted cell with strikethrough indicate 3-rail system span and module clamp allowable capacity exceeds with 3-rails. 4-Rail system required. Contact Unirac Engineering Services for support.

UNIRAC

ASCE 7-22	II	30 ft	Ss = 3.00	23 sq.ft	PORTRAIT	CROSS-SLOPE	NXT	NXT COMBO	Stronghold BUTYL OSB
Design Standard	Risk Category	Roof Height	Seismic	Module Area	Orientation	Rail Direction	Rail Type	Clamp	Attachment

SPAN TABLES

Maximum Allowable Rail Spans for Rooftop Solar Panels Parallel to the Roof Surface (inches)

Ground Snow Load (psf)	Wind Exposure Category	Roof Tilt Angle (deg)	Panel Exposure	Basic Wind Speed (mph)																																						
				90			95			100			105			110			115			120			130			140			150			160			170			180		
				Roof Wind Zone																																						
				1	2	3	1	2	3	1	2	3	1	2	3	1	2	3	1	2	3	1	2	3	1	2	3	1	2	3	1	2	3	1	2	3	1	2	3	1	2	3
0	B	0-7	Interior	29	29	27	29	29	24	29	29	22	29	28	19	29	25	17	29	23	16	29	21	14	24	17	12	21	15	10	18	13	9	15	11	8	13	10	7	12	9	6
			Exposed	29	25	17	29	22	15	28	20	14	25	18	12	22	16	11	20	15	10	19	13	9	16	11	8	13	9	7	11	8	6	10	7	5	9	6	7	8	5	6
		7-20	Interior	29	29	24	29	29	21	29	26	19	29	23	17	29	21	15	27	19	14	24	17	13	20	15	11	17	12	9	15	11	8	13	9	7	11	8	6	10	7	5
			Exposed	29	21	15	26	19	14	23	17	12	21	15	11	19	13	10	17	12	9	15	11	8	13	9	7	11	8	6	9	7	5	8	6	7	7	5	6	6	5	5
		20-27	Interior	29	29	29	29	29	26	29	28	23	29	25	21	29	23	19	29	21	17	29	19	15	28	16	13	23	13	11	20	12	9	17	10	8	15	9	7	14	8	6
			Exposed	29	23	19	29	20	16	29	18	15	28	16	13	26	15	12	23	13	11	21	12	10	18	10	8	15	9	7	13	7	6	11	6	5	10	6	5	9	5	6
		27-45	Interior	29	29	29	29	29	29	29	29	28	29	29	25	29	29	22	29	26	20	26	24	18	22	20	16	19	17	13	16	15	11	14	13	10	12	11	9	11	10	8
			Exposed	29	28	22	28	25	20	25	23	18	23	20	16	21	18	14	19	17	13	17	15	12	14	13	10	12	11	9	10	9	7	9	8	6	8	7	6	7	6	5
	C	0-7	Interior	29	27	18	29	24	16	29	21	15	26	19	13	24	17	12	22	15	11	20	14	10	16	12	8	14	10	7	12	9	6	10	7	5	9	7	7	8	6	6
			Exposed	24	17	12	21	15	10	19	13	9	17	12	8	15	11	8	14	10	7	13	9	6	11	8	5	9	6	7	8	6	6	7	5	5	6	6	4	5	6	4
		7-20	Interior	29	22	16	27	20	14	24	18	13	22	16	12	20	14	10	18	13	9	16	12	9	14	10	7	12	8	6	10	7	5	9	6	5	8	5	6	7	5	5
			Exposed	20	14	10	17	13	9	16	11	8	14	10	7	13	9	7	12	8	6	10	8	5	9	6	5	7	5	6	6	5	5	6	6	5	5	5	4	7	5	3
		20-27	Interior	29	24	20	29	21	17	29	19	16	29	17	14	27	15	13	25	14	11	22	13	10	19	11	9	16	9	7	14	8	6	12	7	6	10	6	5	9	5	7
			Exposed	27	15	13	24	14	11	21	12	10	19	11	9	17	10	8	16	9	7	14	8	7	12	7	6	10	6	5	9	5	6	8	7	6	7	6	5	6	5	4
		27-45	Interior	29	29	24	29	27	21	27	24	19	24	21	17	22	19	15	20	18	14	18	16	13	15	14	11	13	12	9	11	10	8	10	9	7	8	8	6	7	7	5
			Exposed	22	19	15	19	17	13	17	15	12	16	14	11	14	13	10	13	11	9	12	10	8	10	9	7	8	7	6	7	6	5	6	6	7	5	5	6	5	7	5
	D	0-7	Interior	29	22	15	27	19	13	24	17	12	22	16	11	20	14	10	18	13	9	16	12	8	14	10	7	12	8	6	10	7	5	9	6	7	8	5	6	7	5	5
			Exposed	20	14	10	17	12	9	15	11	8	14	10	7	13	9	6	11	8	6	10	7	5	9	6	7	7	5	6	6	7	5	5	6	4	5	5	4	7	5	3
		7-20	Interior	26	18	13	23	16	12	20	14	11	18	13	10	16	12	9	15	11	8	13	10	7	11	8	6	10	7	5	8	6	7	7	5	6	6	7	5	6	6	4
			Exposed	16	12	9	14	10	8	13	9	7	12	8	6	10	8	5	10	7	5	9	6	7	7	5	6	6	7	5	5	6	4	5	5	4	6	4	3	5	4	3
		20-27	Interior	29	20	16	29	18	14	28	16	13	25	14	12	22	13	10	20	12	9	18	11	9	15	9	7	13	8	6	11	6	5	10	6	5	9	5	6	8	7	5
			Exposed	22	13	10	20	11	9	18	10	8	16	9	7	14	8	7	13	7	6	12	7	6	10	6	5	8	5	6	7	6	5	6	6	5	6	5	4	5	4	3
		27-45	Interior	28	25	19	25	22	17	22	20	15	20	18	14	18	16	13	16	15	11	15	13	10	13	11	9	11	10	7	9	8	6	8	7	6	7	6	5	6	5	7
			Exposed	18	16	13	16	14	11	14	13	10	13	11	9	12	10	8	11	9	7	10	9	7	8	7	6	7	6	5	6	5	6	5	7	6	7	6	5	6	5	4
10	B	0-7	Interior	23	23	23	23	23	23	23	23	22	23	23	19	23	23	17	23	23	16	23	21	14	23	17	12	21	15	10	18	13	9	15	11	8	13	10	7	12	9	6
			Exposed	23	23	17	23	22	15	23	20	14	23	18	12	22	16	11	20	15	10	19	13	9	16	11	8	13	9	7	11	8	6	10	7	5	9	6	7	8	5	6
		7-20	Interior	23	23	23	23	23	21	23	23	19	23	23	17	23	21	15	23	19	14	23	17	13	20	15	11	17	12	9	15	11	8	13	9	7	11	8	6	10	7	5
			Exposed	23	21	15	23	19	14	23	17	12	21	15	11	19	13	10	17	12	9	15	11	8	13	9	7	11	8	6	9	7	5	8	6	7	7	5	6	6	5	5
		20-27	Interior	27	27	27	27	27	26	27	27	23	27	25	21	27	23	19	27	21	17	27	19	15	27	16	13	23	13	11	20	12	9	17	10	8	15	9	7	14	8	6
			Exposed	27	23	19	27	20	16	27	18	15	27	16	13	26	15	12	23	13	11	21	12	10	18	10	8	15	9	7	13	7	6	11	6	5	10	6	5	9	5	6
		27-45	Interior	29	29	29	29	29	29	29	29	28	29	29	25	29	29	22	29	26	20	26	24	18	22	20	16	19	17	13	16	15	11	14	13	10	12	11	9	11	10	8
			Exposed	29	28	22	28	25	20	25	23	18	23	20	16	21	18	14	19	17	13	17	15	12	14	13	10	12	11	9	10	9	7	9	8	6	8	7	6	7	6	5
	C	0-7	Interior	23	23	18	23	23	16	23	21	15	23	19	13	23	17	12	22	15	11	20	14	10	16	12	8	14	10	7	12	9	6	10	7	5	9	7	7	8	6	6
			Exposed	23	17	12	21	15	10	19	13	9	17	12	8	15	11	8	14	10	7	13	9	6	11	8	5	9	6	7	8	6	6	7	5	5	6	6	4	5	6	4
		7-20	Interior	23	22	16	23	20	14	23	18	13	22	16	12	20	14	10	18	13	9	16	12	9	14	10	7	12	8	6	10	7	5	9	6	5	8	5	6	7	5	5
			Exposed	20	14	10	17	13	9	16	11	8	14	10	7	13	9	7	12	8	6	10	8	5	9	6	5	7	5	6	6	5	5	6	6	5	5	5	4	7	5	3
		20-27	Interior	27	24	20	27	21	17	27	19	16	27	17	14	27	15	13	25	14	11	22	13	10	19	11	9	16	9	7	14	8	6	12	7	6	10	6	5	9	5	7
			Exposed	27	15	13	24	14	11	21	12	10	19	11	9	17	10	8	16	9	7	14	8	7	12	7	6	10	6	5	9	5	6	8	7	6	7	6	5	6	5	4
		27-45	Interior	29	29	24	29	27	21	27	24	19	24	21	17	22	19	15	20	18	14	18	16	13	15	14	11	13	12	9	11	10	8	10	9	7	8	8	6	7	7	5
			Exposed	22	19	15	19	17	13	17	15	12	16	14	11	14	13	10	13	11	9	12	10	8	10	9	7	8	7	6	7	6	5	6	6	7	5	5	6	5	7	5
	D	0-7	Interior	29	22	15	27	19	13	24	17	12	22	16	11	20	14	10	18	13	9	16	12	8	14	10	7	12	8	6	10	7	5	9	6	7	8	5	6	7	5	5
			Exposed	20	14	10	17	12	9	15	11	8	14	10	7	13	9	6	11	8	6	10	7	5	9	6	7	7	5	6	6	7	5	5	6	4	5	5	4	7	5	3
		7-20	Interior	26	18	13	23	16	12	20	14	11	18	13	10	16	12	9	15	11	8	13	10	7	11	8	6	10	7	5	8	6	7	7	5	6	6	7	5	6	6	4
			Exposed	16	12	9	14	10	8	13	9	7	12	8	6	10	8	5	10	7	5	9	6	7	7	5	6	6	7	5	5	6	4	5	5	4	6	4	3	5	4	3
		20-27	Interior	29	20	16	29	18	14	28	16	13	25	14	12	22	13	10	20	12	9	18	11	9	15	9	7	13	8	6	11	6	5	10	6	5	9	5	6	8	7	5
			Exposed	22	13	10	20	11	9	18	10	8	16	9	7	14	8	7	13	7	6	12	7	6	10	6	5	8	5	6	7	6	5	6	6	5	6	5	4	5	4	3
		27-45	Interior	28	25	19	25	22	17	22	20	15	20	18	14	18	16	13	16	15	11	15	13	10	13	11	9	11	10	7	9	8	6	8	7	6	7	6	5	6	5	7
			Exposed	18	16	13	16	14	11	14	13	10	13	11	9	12	10	8	11	9	7	10	9	7	8	7	6	7	6	5	6	5	6	5	7	6	7	6	5	6	5	4
20	B	0-7	Interior	17	17	17	17	17	17	17	17	17	17	17	17	17	17	17	17	17	16	17	17	14	17	17	12	17	15	10	17	13	9	15	11	8	13	10	7	12	9	6
			Exposed	17	17	17	17	17	15	17	17	14	17	17	12	17	16	11	17	15	10	17	13	9	16	11	8	13	9	7	11	8	6	10	7	5	9	6	7	8	5	6
		7-20	Interior	17	17	17	17	17	17	17	17	17	17	17	17	17	17	15	17	17	14	17	17	13	17	15	11	17	12	9	15	11	8	13	9	7	11	8	6	10	7	5
			Exposed	17	17	15	17	17	14	17	17	12	17	15	11	17	13	10	17	12	9	15	11	8	13	9	7	11	8	6	9	7	5	8	6	7	7	5	6	6	5	5
		20-27	Interior	21	21	21	21	21	21	21	21	21	21	21	21	21	21	19	21	21	17	21	19	15	21	16	13	21	13	11	20	12	9	17	10	8	15	9	7	14	8	6
			Exposed	21	21	19	21	20	16	21	18	15	21	16	13	21	15	12	21	13	11	21	12	10	18	10	8	15	9	7	13	7	6	11	6	5	10	6	5	9	5	6
		27-45	Interior	23	23	23	23	23	23	23	23	23	23	23	23	23	23	22	23	23	20	23	23	18	22	20	16	19	17	13	16	15	11	14	13	10	12	11	9	11	10	8
			Exposed	23	23	22	23	23	20	23	23	18	23	20	16	21	18	14	19	17	13	17	15	12	14	13	10	12	11	9	10	9	7	9	8	6	8	7	6	7	6	5
	C	0-7	Interior	17	17	17	17	17	16	17	17	15	17	17	13	17	17	12	17	15	11	17	14	10	16	12	8	14	10	7	12	9	6	10	7	5	9	7	7	8	6	6
			Exposed	17	17	12	17	15	10	17	13	9	17	12	8	15	11	8	14	10	7	13	9	6	11	8	5	9	6	7	8	6	6	7	5	5	6	6	4	5	6	4
		7-20	Interior	17	17	16	17	17	14	17	17	13	17	16	12	17	14	10	17	13	9	16	12	9	14	10	7	12	8	6	10	7	5	9	6	5	8	5	6	7	5	5
			Exposed	17	14	10	17	13	9	16	11	8	14	10	7	13	9	7	12	8	6	10	8	5	9	6	5	7	5	6	6	5	5	6	6	5	5	5	4	7	5	3
		20-27	Interior	21	21	20	21	21	17	21	19	16	21	17	14	21	15	13	21	14	11	21	13	10	19	11	9	16	9	7	14	8	6	12	7	6	10	6	5	9	5	7
			Exposed	21	15	13	21	14	11	21	12	10	19	11	9	17	10	8	16	9	7	14	8	7	12	7	6	10	6	5	9	5	6	8	7	6	7	6	5	6	5	4
		27-45	Interior	23	23	23	23	23	21	23	23	19	23	21	17	22	19	15	20	18	14	18	16	13	15	14	11	13	12	9	11	10	8	10	9	7	8	8	6	7	7	5
			Exposed	22	19	15	19	17	13	17	15	12	16	14	11	14	13	10	13	11	9	12	10	8	10	9	7	8	7	6	7	6	5	6	6	7	5	5	6	5	7	5
	D	0-7	Interior	17	17	15	17	17	13	17	17	12	17	16	11	17	14	10	17	13	9	16	12	8	14	10	7	12	8	6	10	7	5	9	6	7	8	5	6	7	5	5
			Exposed	17	14	10	17	12	9	15	11	8	14	10	7	13	9	6	11	8	6	10	7	5	9	6	7	7	5	6	6	7	5	5	6	4	5	5	4	7	5	3
		7-20	Interior	17	17	13	17	16	12	17	14	11	17	13	10	16	12	9	15	11	8	13	10	7	11	8	6	10	7	5	8	6	7	7	5	6	6	7	5	6	6	4
			Exposed	16	12	9	14	10	8	13	9	7	12	8	6	10	8	5	10	7	5	9	6	7	7	5	6	6	7	5	5	6	4	5	5	4	6	4	3	5	4	3
		20-27	Interior	22	20	16	22	18	14	22	16	13	22	14	12	22	13	10	20	12	9	18	11	9	15	9	7	13	8	6	11	6	5	10	6	5	9	5	6	8	7	5
			Exposed	22	13	10	20	11	9	18	10	8	16	9	7	14	8	7	13	7	6	12	7	6	10	6	5	8	5	6	7	6	5	6	6	5	6	5	4	5	4	3
		27-45	Interior	24	24	19	24	22	17	22	20	15	20	18	14	18	16	13	16	15	11	15	13	10	13	11	9	11	10	7	9	8	6	8	7	6	7	6	5	6	5	7
			Exposed	18	16	13	16	14	11	14	13	10	13	11	9	12	10	8	11	9	7	10	9	7	8	7	6	7	6	5	6	5	6	5	7	6	7	6	5	6	5	4

* Cells with an astrisks indicates that the L-foot must be oriented in the Y- direction as indicated in the image.

10 Highlighted cell indicate 3-rail system span. Contact Unirac Engineering Services for support.

~~10~~ Highlighted cell with strikethrough indicate 3-rail system span and module clamp allowable capacity exceeds with 3-rails. 4-Rail system required. Contact Unirac Engineering Services for support.

UNIRAC

ASCE 7-22	II	30 ft	Ss = 3.00	23 sq.ft	PORTRAIT	CROSS-SLOPE	NXT	NXT COMBO	Stronghold BUTYL OSB
Design Standard	Risk Category	Roof Height	Seismic	Module Area	Orientation	Rail Direction	Rail Type	Clamp	Attachment

SPAN TABLES

Maximum Allowable Rail Spans for Rooftop Solar Panels Parallel to the Roof Surface (inches)

Ground Snow Load (psf)	Wind Exposure Category	Roof Tilt Angle (deg)	Panel Exposure	Basic Wind Speed (mph)																																						
				90			95			100			105			110			115			120			130			140			150			160			170			180		
				Roof Wind Zone																																						
				1	2	3	1	2	3	1	2	3	1	2	3	1	2	3	1	2	3	1	2	3	1	2	3	1	2	3	1	2	3	1	2	3	1	2	3	1	2	3
30	B	0-7	Interior	13	13	13	13	13	13	13	13	13	13	13	13	13	13	13	13	13	13	13	13	13	13	13	12	13	13	10	13	13	9	13	11	8	13	10	7	12	9	6
			Exposed	13	13	13	13	13	13	13	13	13	13	13	12	13	13	11	13	13	10	13	13	9	13	11	8	13	9	7	11	8	6	10	7	5	9	6	7	8	5	6
		7-20	Interior	14	14	14	14	14	14	14	14	14	14	14	14	14	14	14	14	14	14	14	14	13	14	14	11	14	12	9	14	11	8	13	9	7	11	8	6	10	7	5
			Exposed	14	14	14	14	14	14	14	14	12	14	14	11	14	13	10	14	12	9	14	11	8	13	9	7	11	8	6	9	7	5	8	6	7	7	5	6	6	5	5
		20-27	Interior	17	17	17	17	17	17	17	17	17	17	17	17	17	17	17	17	17	17	17	17	15	17	16	13	17	13	11	17	12	9	17	10	8	15	9	7	14	8	6
			Exposed	17	17	17	17	17	16	17	17	15	17	16	13	17	15	12	17	13	11	17	12	10	17	10	8	15	9	7	13	7	6	11	6	5	10	6	5	9	5	6
		27-45	Interior	20	20	20	20	20	20	20	20	20	20	20	20	20	20	20	20	20	20	20	20	18	20	20	16	19	17	13	16	15	11	14	13	10	12	11	9	11	10	8
			Exposed	20	20	20	20	20	20	20	20	18	20	20	16	20	18	14	19	17	13	17	15	12	14	13	10	12	11	9	10	9	7	9	8	6	8	7	6	7	6	5
	C	0-7	Interior	13	13	13	13	13	13	13	13	13	13	13	13	13	13	12	13	13	11	13	13	10	13	12	8	13	10	7	12	9	6	10	7	5	9	7	7	8	6	6
			Exposed	13	13	12	13	13	10	13	13	9	13	12	8	13	11	8	13	10	7	13	9	6	11	8	5	9	6	7	8	6	6	7	5	5	6	6	4	5	6	4
		7-20	Interior	14	14	14	14	14	14	14	14	13	14	14	12	14	14	10	14	13	9	14	12	9	14	10	7	12	8	6	10	7	5	9	6	5	8	5	6	7	5	5
			Exposed	14	14	10	14	13	9	14	11	8	14	10	7	13	9	7	12	8	6	10	8	5	9	6	5	7	5	6	6	5	5	6	6	5	5	5	4	7	5	3
		20-27	Interior	17	17	17	17	17	17	17	17	16	17	17	14	17	15	13	17	14	11	17	13	10	17	11	9	16	9	7	14	8	6	12	7	6	10	6	5	9	5	7
			Exposed	17	15	13	17	14	11	17	12	10	17	11	9	17	10	8	16	9	7	14	8	7	12	7	6	10	6	5	9	5	6	8	7	6	7	6	5	6	5	4
		27-45	Interior	20	20	20	20	20	20	20	20	19	20	20	17	20	19	15	19	18	14	18	16	13	15	14	11	13	12	9	11	10	8	10	9	7	8	8	6	7	7	5
			Exposed	20	19	15	19	17	13	17	15	12	16	14	11	14	13	10	13	11	9	12	10	8	10	9	7	8	7	6	7	6	5	6	6	7	5	5	6	5	7	5
	D	0-7	Interior	13	13	13	13	13	13	13	13	12	13	13	11	13	13	10	13	13	9	13	12	8	13	10	7	12	8	6	10	7	5	9	6	7	8	5	6	7	5	5
			Exposed	13	13	10	13	12	9	13	11	8	13	10	7	13	9	6	11	8	6	10	7	5	9	6	7	7	5	6	6	7	5	5	6	4	5	5	4	7	5	3
		7-20	Interior	14	14	13	14	14	12	14	14	11	14	13	10	14	12	9	14	11	8	13	10	7	11	8	6	10	7	5	8	6	7	7	5	6	6	7	5	6	6	4
			Exposed	14	12	9	14	10	8	13	9	7	12	8	6	10	8	5	10	7	5	9	6	7	7	5	6	6	7	5	5	6	4	5	5	4	6	4	3	5	4	3
		20-27	Interior	18	18	16	18	18	14	18	16	13	18	14	12	18	13	10	18	12	9	18	11	9	15	9	7	13	8	6	11	6	5	10	6	5	9	5	6	8	7	5
			Exposed	18	13	10	18	11	9	18	10	8	16	9	7	14	8	7	13	7	6	12	7	6	10	6	5	8	5	6	7	6	5	6	6	5	6	5	4	5	4	3
		27-45	Interior	21	21	19	21	21	17	21	20	15	20	18	14	18	16	13	16	15	11	15	13	10	13	11	9	11	10	7	9	8	6	8	7	6	7	6	5	6	5	7
			Exposed	18	16	13	16	14	11	14	13	10	13	11	9	12	10	8	11	9	7	10	9	7	8	7	6	7	6	5	6	5	6	5	7	6	7	6	5	6	5	4
40	B	0-7	Interior	12	12	12	12	12	12	12	12	12	12	12	12	12	12	12	12	12	12	12	12	12	12	12	10	12	12	9	12	11	8	12	10	7	12	9	6	9	6	6
			Exposed	12	12	12	12	12	12	12	12	12	12	12	12	12	12	11	12	12	10	12	12	9	12	11	8	12	9	7	11	8	6	10	7	5	9	6	7	8	5	6
		7-20	Interior	13	13	13	13	13	13	13	13	13	13	13	13	13	13	13	13	13	13	13	13	12	13	13	11	13	12	9	13	11	8	13	9	7	11	8	6	10	7	5
			Exposed	13	13	13	13	13	13	13	13	12	13	13	11	13	13	10	13	12	9	13	11	8	13	9	7	11	8	6	9	7	5	8	6	7	7	5	6	6	5	5
		20-27	Interior	15	15	15	15	15	15	15	15	15	15	15	15	15	15	15	15	15	15	15	15	15	15	15	13	15	13	11	15	12	9	15	10	8	14	9	7	14	8	6
			Exposed	15	15	15	15	15	15	15	15	15	15	15	13	15	15	12	15	13	11	15	12	10	15	10	8	15	9	7	13	7	6	11	6	5	10	6	5	9	5	6
		27-45	Interior	17	17	17	17	17	17	17	17	17	17	17	17	17	17	17	17	17	17	17	17	17	17	17	16	16	16	13	15	15	11	14	13	10	12	11	9	11	10	8
			Exposed	17	17	17	17	17	17	17	17	17	17	17	16	17	17	14	17	17	13	17	15	12	14	13	10	12	11	9	10	9	7	9	8	6	8	7	6	7	6	5
	C	0-7	Interior	12	12	12	12	12	12	12	12	12	12	12	12	12	12	12	12	12	11	12	12	10	12	12	8	12	10	7	12	9	6	10	7	5	9	7	7	8	6	6
			Exposed	12	12	12	12	12	10	12	12	9	12	12	8	12	11	8	12	10	7	12	9	6	11	8	5	9	6	7	8	6	6	7	5	5	6	6	4	5	6	4
		7-20	Interior	13	13	13	13	13	13	13	13	13	13	13	12	13	13	10	13	13	9	13	12	9	13	10	7	12	8	6	10	7	5	9	6	5	8	5	6	7	5	5
			Exposed	13	13	10	13	13	9	13	11	8	13	10	7	13	9	7	12	8	6	10	8	5	9	6	5	7	5	6	6	5	5	6	6	5	5	5	4	7	5	3
		20-27	Interior	15	15	15	15	15	15	15	15	15	15	15	14	15	15	13	15	14	11	15	13	10	15	11	9	14	9	7	14	8	6	12	7	6	10	6	5	9	5	7
			Exposed	15	15	13	15	14	11	15	12	10	15	11	9	15	10	8	15	9	7	14	8	7	12	7	6	10	6	5	9	5	6	8	7	6	7	6	5	6	5	4
		27-45	Interior	17	17	17	17	17	17	17	17	17	17	17	17	17	17	15	17	17	14	16	16	13	15	14	11	13	12	9	11	10	8	10	9	7	8	8	6	7	7	5
			Exposed	17	17	15	17	17	13	17	15	12	16	14	11	14	13	10	13	11	9	12	10	8	10	9	7	8	7	6	7	6	5	6	6	7	5	5	6	5	7	5
	D	0-7	Interior	13	13	13	13	13	13	13	13	12	13	13	11	13	13	10	13	13	9	13	12	8	13	10	7	12	8	6	10	7	5	9	6	7	8	5	6	7	5	5
			Exposed	13	13	10	13	12	9	13	11	8	13	10	7	13	9	6	11	8	6	10	7	5	9	6	7	7	5	6	6	7	5	5	6	4	5	5	4	7	5	3
		7-20	Interior	13	13	13	13	13	12	13	13	11	13	13	10	13	12	9	13	11	8	13	10	7	11	8	6	10	7	5	8	6	7	7	5	6	6	7	5	6	6	4
			Exposed	13	12	9	13	10	8	13	9	7	12	8	6	10	8	5	10	7	5	9	6	7	7	5	6	6	7	5	5	6	4	5	5	4	6	4	3	5	4	3
		20-27	Interior	15	15	15	15	15	14	15	15	13	15	14	12	15	13	10	15	12	9	15	11	9	15	9	7	13	8	6	11	6	5	10	6	5	9	5	6	8	7	5
			Exposed	15	13	10	15	11	9	15	10	8	15	9	7	14	8	7	13	7	6	12	7	6	10	6	5	8	5	6	7	6	5	6	6	5	6	5	4	5	4	3
		27-45	Interior	18	18	18	18	18	17	18	18	15	18	18	14	17	16	13	16	15	11	15	13	10	13	11	9	11	10	7	9	8	6	8	7	6	7	6	5	6	5	7
			Exposed	18	16	13	16	14	11	14	13	10	13	11	9	12	10	8	11	9	7	10	9	7	8	7	6	7	6	5	6	5	6	5	7	6	7	6	5	6	5	4
50	B	0-7	Interior	11	11	11	11	11	11	11	11	11	11	11	11	11	11	11	11	11	11	11	11	11	11	11	10	11	11	9	11	11	8	11	10	7	11	9	6	11	9	6
			Exposed	11	11	11	11	11	11	11	11	11	11	11	11	11	11	11	11	11	10	11	11	9	11	11	8	11	9	7	11	8	6	10	7	5	9	6	7	8	5	6
		7-20	Interior	11	11	11	11	11	11	11	11	11	11	11	11	11	11	11	11	11	11	11	11	11	11	11	9	11	11	8	11	9	7	11	8	6	10	7	5	10	7	5
			Exposed	11	11	11	11	11	11	11	11	11	11	11	11	11	11	10	11	11	9	11	11	8	11	9	7	11	8	6	9	7	5	8	6	7	7	5	6	6	5	5
		20-27	Interior	13	13	13	13	13	13	13	13	13	13	13	13	13	13	13	13	13	13	13	13	13	13	13	11	13	13	11	13	12	9	13	10	8	12	9	7	12	8	6
			Exposed	13	13	13	13	13	13	13	13	13	13	13	13	13	13	12	13	13	11	13	12	10	13	10	8	13	9	7	13	7	6	11	6	5	10	6	5	9	5	6
		27-45	Interior	15	15	15	15	15	15	15	15	15	15	15	15	15	15	15	15	15	15	15	15	15	15	15	15	14	14	13	14	14	11	13	13	10	12	11	9	11	10	8
			Exposed	15	15	15	15	15	15	15	15	15	15	15	15	15	15	14	15	15	13	15	15	12	14	13	10	12	11	9	10	9	7	9	8	6	8	7	6	7	6	5
	C	0-7	Interior	11	11	11	11	11	11	11	11	11	11	11	11	11	11	11	11	11	11	11	11	10	11	11	8	11	10	7	11	9	6	10	7	5	9	7	7	8	6	6
			Exposed	11	11	11	11	11	10	11	11	9	11	11	8	11	11	8	11	10	7	11	9	6	11	8	5	9	6	7	8	6	6	7	5	5	6	6	4	5	6	4
		7-20	Interior	11	11	11	11	11	11	11	11	11	11	11	11	11	11	10	11	11	9	11	11	9	11	10	7	11	8	6	10	7	5	9	6	5	8	5	6	7	5	5
			Exposed	11	11	10	11	11	9	11	11	8	11	10	7	11	9	7	11	8	6	10	8	5	9	6	5	7	5	6	6	5	5	6	6	5	5	5	4	7	5	3
		20-27	Interior	13	13	13	13	13	13	13	13	13	13	13	13	13	13	13	13	13	11	13	13	10	13	11	9	12	9	7	12	8	6	11	7	6	10	6	5	9	5	7
			Exposed	13	13	13	13	13	11	13	12	10	13	11	9	13	10	8	13	9	7	13	8	7	12	7	6	10	6	5	9	5	6	8	7	6	7	6	5	6	5	4
		27-45	Interior	15	15	15	15	15	15	15	15	15	15	15	15	15	15	15	15	14	14	14	13	13	13	13	11	13	12	9	11	10	8	10	9	7	8	8	6	7	7	5
			Exposed	15	15	15	15	15	13	15	15	12	15	14	11	14	13	10	13	11	9	12	10	8	10	9	7	8	7	6	7	6	5	6	6	7	5	5	6	5	7	5
	D	0-7	Interior	12	12	12	12	12	12	12	12	12	12	12	11	12	12	10	12	12	9	12	12	8	12	10	7	12	8	6	10	7	5	9	6	7	8	5	6	7	5	5
			Exposed	12	12	10	12	12	9	12	11	8	12	10	7	12	9	6	11	8	6	10	7	5	9	6	7	7	5	6	6	7	5	5	6	4	5	5	4	7	5	3
		7-20	Interior	12	12	12	12	12	12	12	12	11	12	12	10	12	12	9	12	11	8	12	10	7	11	8	6	10	7	5	8	6	7	7	5	6	6	7	5	6	6	4
			Exposed	12	12	9	12	10	8	12	9	7	12	8	6	10	8	5	10	7	5	9	6	7	7	5	6	6	7	5	5	6	4	5	5	4	6	4	3	5	4	3
		20-27	Interior	14	14	14	14	14	14	14	14	13	14	14	12	14	13	10	14	12	9	14	11	9	13	9	7	13	8	6	11	6	5	10	6	5	9	5	6	8	7	5
			Exposed	14	13	10	14	11	9	14	10	8	14	9	7	14	8	7	13	7	6	12	7	6	10	6	5	8	5	6	7	6	5	6	6	5	6	5	4	5	4	3
		27-45	Interior	16	16	16	16	16	16	16	16	15	16	16	14	15	15	13	14	14	11	14	13	10	13	11	9	11	10	7	9	8	6	8	7	6	7	6	5	6	5	7
			Exposed	16	16	13	16	14	11	14	13	10	13	11	9	12	10	8	11	9	7	10	9	7	8	7	6	7	6	5	6	5	6	5	7	6	7	6	5	6	5	4

* Cells with an astrisks indicates that the L-foot must be oriented in the Y- direction as indicated in the image.

10 Highlighted cell indicate 3-rail system span. Contact Unirac Engineering Services for support.

~~10~~ Highlighted cell with strikethrough indicate 3-rail system span and module clamp allowable capacity exceeds with 3-rails. 4-Rail system required. Contact Unirac Engineering Services for support.

UNIRAC

ASCE 7-22	II	30 ft	Ss = 3.00	23 sq.ft	PORTRAIT	CROSS-SLOPE	NXT	NXT COMBO	Stronghold BUTYL OSB
Design Standard	Risk Category	Roof Height	Seismic	Module Area	Orientation	Rail Direction	Rail Type	Clamp	Attachment

SPAN TABLES

Maximum Allowable Rail Spans for Rooftop Solar Panels Parallel to the Roof Surface (inches)

Ground Snow Load (psf)	Wind Exposure Category	Roof Tilt Angle (deg)	Panel Exposure	Basic Wind Speed (mph)																																						
				90			95			100			105			110			115			120			130			140			150			160			170			180		
				Roof Wind Zone																																						
				1	2	3	1	2	3	1	2	3	1	2	3	1	2	3	1	2	3	1	2	3	1	2	3	1	2	3	1	2	3	1	2	3	1	2	3	1	2	3
60	B	0-7	Interior	9	9	9	9	9	9	9	9	9	9	9	9	9	9	9	9	9	9	9	9	9	9	9	9	9	9	9	9	9	9	9	9	8	9	9	7	9	9	6
			Exposed	9	9	9	9	9	9	9	9	9	9	9	9	9	9	9	9	9	9	9	9	9	9	9	8	9	9	7	9	8	6	9	7	5	9	6	7	8	5	6
		7-20	Interior	9	9	9	9	9	9	9	9	9	9	9	9	9	9	9	9	9	9	9	9	9	9	9	9	9	9	9	9	9	8	9	9	7	9	8	6	9	7	5
			Exposed	9	9	9	9	9	9	9	9	9	9	9	9	9	9	9	9	9	9	9	9	8	9	9	7	9	8	6	9	7	5	8	6	7	7	5	6	6	5	5
		20-27	Interior	11	11	11	11	11	11	11	11	11	11	11	11	11	11	11	11	11	11	11	11	11	11	11	11	11	11	11	11	11	9	11	10	8	11	9	7	11	8	6
			Exposed	11	11	11	11	11	11	11	11	11	11	11	11	11	11	11	11	11	11	11	11	10	11	10	8	11	9	7	11	7	6	11	6	5	10	6	5	9	5	6
		27-45	Interior	13	13	13	13	13	13	13	13	13	13	13	13	13	13	13	13	13	13	13	13	13	13	13	13	13	13	13	12	12	11	12	12	10	11	11	9	11	10	8
			Exposed	13	13	13	13	13	13	13	13	13	13	13	13	13	13	13	13	13	13	13	13	12	13	13	10	12	11	9	10	9	7	9	8	6	8	7	6	7	6	5
	C	0-7	Interior	9	9	9	9	9	9	9	9	9	9	9	9	9	9	9	9	9	9	9	9	9	9	9	8	9	9	7	9	9	6	9	7	5	9	7	7	8	6	6
			Exposed	9	9	9	9	9	9	9	9	9	9	9	8	9	9	8	9	9	7	9	9	6	9	8	5	9	6	7	8	6	6	7	5	5	6	6	4	5	6	4
		7-20	Interior	9	9	9	9	9	9	9	9	9	9	9	9	9	9	9	9	9	9	9	9	9	9	9	7	9	8	6	9	7	5	9	6	5	8	5	6	7	5	5
			Exposed	9	9	9	9	9	9	9	9	8	9	9	7	9	9	7	9	8	6	9	8	5	9	6	5	7	5	6	6	5	5	6	6	5	5	5	4	7	5	3
		20-27	Interior	11	11	11	11	11	11	11	11	11	11	11	11	11	11	11	11	11	11	11	11	10	11	11	9	11	9	7	11	8	6	10	7	6	10	6	5	9	5	7
			Exposed	11	11	11	11	11	11	11	11	10	11	11	9	11	10	8	11	9	7	11	8	7	11	7	6	10	6	5	9	5	6	8	7	6	7	6	5	6	5	4
		27-45	Interior	13	13	13	13	13	13	13	13	13	13	13	11	13	13	10	13	11	9	12	10	8	10	9	7	8	7	6	7	6	5	6	6	7	5	5	6	5	7	5
			Exposed	13	13	13	13	13	13	13	13	12	13	13	11	13	13	10	13	11	9	12	10	8	10	9	7	8	7	6	7	6	5	6	6	7	5	5	6	5	7	5
	D	0-7	Interior	10	10	10	10	10	10	10	10	10	10	10	10	10	10	10	10	10	9	10	10	8	10	10	7	10	8	6	10	7	5	9	6	7	8	5	6	7	5	5
			Exposed	10	10	10	10	10	9	10	10	8	10	10	7	10	9	6	10	8	6	10	7	5	9	6	7	7	5	6	6	7	5	5	6	4	5	5	4	7	5	3
		7-20	Interior	10	10	10	10	10	10	10	10	10	10	10	10	10	10	9	10	10	8	10	10	7	10	8	6	10	7	5	8	6	7	7	5	6	6	7	5	6	6	4
			Exposed	10	10	9	10	10	8	10	9	7	10	8	6	10	8	5	10	7	5	9	6	7	7	5	6	6	7	5	5	6	4	5	5	4	6	4	3	5	4	3
		20-27	Interior	12	12	12	12	12	12	12	12	12	12	12	12	12	12	10	12	12	9	12	11	9	12	9	7	11	8	6	11	6	5	10	6	5	9	5	6	8	7	5
			Exposed	12	12	10	12	11	9	12	10	8	12	9	7	12	8	7	12	7	6	12	7	6	10	6	5	8	5	6	7	6	5	6	6	5	6	5	4	5	4	3
		27-45	Interior	14	14	14	14	14	14	14	14	14	14	14	14	13	13	13	13	13	11	13	13	10	12	11	9	11	10	7	9	8	6	8	7	6	7	6	5	6	5	7
			Exposed	14	14	13	14	14	11	14	13	10	13	11	9	12	10	8	11	9	7	10	9	7	8	7	6	7	6	5	6	5	6	5	7	6	7	6	5	6	5	4
70	B	0-7	Interior	8	8	8	8	8	8	8	8	8	8	8	8	8	8	8	8	8	8	8	8	8	8	8	8	8	8	8	8	8	8	8	8	8	8	8	7	8	8	6
			Exposed	8	8	8	8	8	8	8	8	8	8	8	8	8	8	8	8	8	8	8	8	8	8	8	8	8	8	7	8	8	6	8	7	5	8	6	7	8	5	6
		7-20	Interior	8	8	8	8	8	8	8	8	8	8	8	8	8	8	8	8	8	8	8	8	8	8	8	8	8	8	8	8	8	8	8	8	7	8	8	6	8	7	5
			Exposed	8	8	8	8	8	8	8	8	8	8	8	8	8	8	8	8	8	8	8	8	8	8	8	7	8	8	6	8	7	5	8	6	7	7	5	6	6	5	5
		20-27	Interior	10	10	10	10	10	10	10	10	10	10	10	10	10	10	10	10	10	10	10	10	10	10	10	10	10	10	10	10	10	9	10	10	8	10	9	7	9	7	6
			Exposed	10	10	10	10	10	10	10	10	10	10	10	10	10	10	10	10	10	10	10	10	10	10	10	8	10	9	7	10	7	6	10	6	5	10	6	5	9	5	6
		27-45	Interior	12	12	12	12	12	12	12	12	12	12	12	12	12	12	12	12	12	12	12	12	12	12	12	12	12	12	12	11	11	11	11	11	10	10	10	9	10	10	8
			Exposed	12	12	12	12	12	12	12	12	12	12	12	12	12	12	12	12	12	12	12	12	12	12	12	10	12	11	9	10	9	7	9	8	6	8	7	6	7	6	5
	C	0-7	Interior	8	8	8	8	8	8	8	8	8	8	8	8	8	8	8	8	8	8	8	8	8	8	8	8	8	8	7	8	8	6	8	7	5	8	7	7	8	6	6
			Exposed	8	8	8	8	8	8	8	8	8	8	8	8	8	8	8	8	8	7	8	8	6	8	8	5	8	6	7	8	6	6	7	5	5	6	6	4	5	6	4
		7-20	Interior	8	8	8	8	8	8	8	8	8	8	8	8	8	8	8	8	8	8	8	8	8	8	8	7	8	8	6	8	7	5	8	6	5	8	5	6	7	5	5
			Exposed	8	8	8	8	8	8	8	8	8	8	8	7	8	8	7	8	8	6	8	8	5	8	6	5	7	5	6	6	5	5	6	6	5	5	5	4	7	5	3
		20-27	Interior	10	10	10	10	10	10	10	10	10	10	10	10	10	10	10	10	10	10	10	10	10	10	10	9	10	9	7	10	8	6	9	7	6	9	6	5	9	5	7
			Exposed	10	10	10	10	10	10	10	10	10	10	10	9	10	10	8	10	9	7	10	8	7	10	7	6	10	6	5	9	5	6	8	7	6	7	6	5	6	5	4
		27-45	Interior	12	12	12	12	12	12	12	12	12	12	12	12	12	12	12	12	12	12	12	12	12	12	12	12	12	12	11	10	10	9	10	10	9	10	9	8	9	8	7
			Exposed	12	12	12	12	12	12	12	12	12	12	12	12	12	12	12	12	12	12	12	12	12	12	12	10	12	11	9	10	9	7	9	8	6	8	7	6	7	6	5
	D	0-7	Interior	8	8	8	8	8	8	8	8	8	8	8	8	8	8	8	8	8	8	8	8	8	8	8	8	8	8	7	8	8	6	8	7	5	8	7	7	8	6	6
			Exposed	8	8	8	8	8	8	8	8	8	8	8	7	8	8	6	8	8	6	8	7	5	8	6	7	7	5	6	6	7	5	5	6	4	5	5	4	7	5	3
		7-20	Interior	9	9	9	9	9	9	9	9	9	9	9	9	9	9	9	9	9	8	9	9	7	9	8	6	9	7	5	8	6	7	7	5	6	6	7	5	6	6	4
			Exposed	9	9	9	9	9	8	9	9	7	9	8	6	9	8	5	9	7	5	9	6	7	7	5	6	6	7	5	5	6	4	5	5	4	6	4	3	5	4	3
		20-27	Interior	11	11	11	11	11	11	11	11	11	11	11	11	11	11	10	11	11	9	11	11	9	11	9	7	10	8	6	10	6	5	9	6	5	9	5	6	8	7	5
			Exposed	11	11	10	11	11	9	11	10	8	11	9	7	11	8	7	11	7	6	11	7	6	10	6	5	8	5	6	7	6	5	6	6	5	6	5	4	5	4	3
		27-45	Interior	13	13	13	13	13	13	13	13	13	13	13	13	12	12	12	12	12	11	12	12	10	11	11	9	10	10	7	9	8	6	8	7	6	7	6	5	6	5	7
			Exposed	13	13	13	13	13	11	13	13	10	13	11	9	12	10	8	11	9	7	10	9	7	8	7	6	7	6	5	6	5	6	5	7	6	7	6	5	6	5	4
80	B	0-7	Interior	7	7	7	7	7	7	7	7	7	7	7	7	7	7	7	7	7	7	7	7	7	7	7	7	7	7	7	7	7	7	7	7	7	7	7	7	7	7	6
			Exposed	7	7	7	7	7	7	7	7	7	7	7	7	7	7	7	7	7	7	7	7	7	7	7	7	7	7	7	7	7	6	7	7	5	7	6	7	7	5	6
		7-20	Interior	7	7	7	7	7	7	7	7	7	7	7	7	7	7	7	7	7	7	7	7	7	7	7	7	7	7	7	7	7	7	7	7	7	7	7	6	7	7	5
			Exposed	7	7	7	7	7	7	7	7	7	7	7	7	7	7	7	7	7	6	7	7	5	7	6	5	7	5	6	6	5	5	6	6	5	5	5	4	7	5	3
		20-27	Interior	8	8	8	8	8	8	8	8	8	8	8	8	8	8	8	8	8	8	8	8	8	8	8	7	8	8	7	8	7	6	8	7	6	8	6	5	8	5	7
			Exposed	8	8	8	8	8	8	8	8	8	8	8	8	8	8	8	8	8	7	8	8	7	8	7	6	8	6	5	8	5	6	8	7	6	7	6	5	6	5	4
		27-45	Interior	11	11	11	11	11	11	11	11	11	11	11	11	11	11	11	11	11	11	11	11	11	11	11	11	11	11	11	10	10	9	9	9	8	9	9	7	8	8	6
			Exposed	11	11	11	11	11	11	11	11	11	11	11	11	11	11	11	11	11	11	11	11	11	11	11	9	10	9	7	9	8	6	8	7	6	7	6	5	6	5	4
	C	0-7	Interior	7	7	7	7	7	7	7	7	7	7	7	7	7	7	7	7	7	7	7	7	7	7	7	7	7	7	7	7	7	6	7	7	5	7	7	7	7	6	6
			Exposed	7	7	7	7	7	7	7	7	7	7	7	7	7	7	7	7	7	7	7	7	6	7	7	5	7	6	7	6	6	4	5	5	6	6	4	5	6	4	4
		7-20	Interior	7	7	7	7	7	7	7	7	7	7	7	7	7	7	7	7	7	7	7	7	7	7	7	7	7	7	6	7	7	5	7	6	5	7	5	6	7	5	5
			Exposed	7	7	7	7	7	7	7	7	7	7	7	7	7	7	7	7	7	6	7	7	5	7	6	5	7	5	6	6	5	5	6	6	5	5	5	4	7	5	3
		20-27	Interior	8	8	8	8	8	8	8	8	8	8	8	8	8	8	8	8	8	8	8	8	8	8	8	7	8	8	7	8	8	6	8	7	6	8	6	5	8	5	7
			Exposed	8	8	8	8	8	8	8	8	8	8	8	8	8	8	8	8	8	7	8	8	7	8	7	6	8	6	5	8	5	6	8	7	6	7	6	5	6	5	4
		27-45	Interior	11	11	11	11	11	11	11	11	11	11	11	11	11	11	11	11	11	11	11	11	10	10	10	9	9	9	8	9	9	7	8	8	6	7	7	5	7	7	5
			Exposed	11	11	11	11	11	11	11	11	11	11	11	11	11	11	10	11	11	9	10	10	8	10	9	7	8	7	6	7	6	5	6	6	7	5	5	6	5	7	5
	D	0-7	Interior	7	7	7	7	7	7	7	7	7	7	7	7	7	7	7	7	7	7	7	7	7	7	7	7	7	7	6	7	7	5	7	6	7	7	5	6	7	5	5
			Exposed	7	7	7	7	7	7	7	7	7	7	7	7	7	7	6	7	7	6	7	7	5	7	6	7	7	5	6	6	7	5	5	6	4	5	5	4	7	5	3
		7-20	Interior	8	8	8	8	8	8	8	8	8	8	8	8	8	8	8	8	8	8	8	8	7	8	8	6	8	7	5	8	6	7	7	5	6	6	7	5	6	6	4
			Exposed	8	8	8	8	8	8	8	8	7	8	8	6	8	8	5	8	7	5	8	6	7	7	5	6	6	7	5	5	6	4	5	5	4	6	4	3	5	4	3
		20-27	Interior	9	9	9	9	9	9	9	9	9	9	9	9	9	9	9	9	9	9	9	9	9	9	9	7	9	8	6	9	6	5	9	6	5	8	5	6	8	7	5
			Exposed	9	9	9	9	9	9	9	9	8	9	9	7	9	8	7	9	7	6	9	7	6	9	6	5	8	5	6	7	6	5	6	6	5	6	5	4	5	4	3
		27-45	Interior	12	12	12	12	12	12	12	12	12	12	12	12	11	11	11	11	11	11	11	11	10	10	10	9	10	10	7	9	8	6	8	7	6	7	6	5	6	5	7
			Exposed	12	12	12	12	12	11	12	12	10	12	11	9	11	10	8	11	9	7	10	9	7	8	7	6	7	6	5	6	5	6	5	7	6	7	6	5	6	5	4

* Cells with an astrisks indicates that the L-foot must be oriented in the Y- direction as indicated in the image.

10 Highlighted cell indicate 3-rail system span. Contact Unirac Engineering Services for support.

~~10~~ Highlighted cell with strikethrough indicate 3-rail system span and module clamp allowable capacity exceeds with 3-rails. 4-Rail system required. Contact Unirac Engineering Services for support.

UNIRAC

ASCE 7-22	II	30 ft	Ss = 3.00	23 sq.ft	PORTRAIT	CROSS-SLOPE	NXT	NXT COMBO	Stronghold BUTYL OSB
Design Standard	Risk Category	Roof Height	Seismic	Module Area	Orientation	Rail Direction	Rail Type	Clamp	Attachment

SPAN TABLES

Maximum Allowable Rail Spans for Rooftop Solar Panels Parallel to the Roof Surface (inches)

Ground Snow Load (psf)	Wind Exposure Category	Roof Tilt Angle (deg)	Panel Exposure	Basic Wind Speed (mph)																																						
				90			95			100			105			110			115			120			130			140			150			160			170			180		
				Roof Wind Zone																																						
				1	2	3	1	2	3	1	2	3	1	2	3	1	2	3	1	2	3	1	2	3	1	2	3	1	2	3	1	2	3	1	2	3	1	2	3	1	2	3
90	B	0-7	Interior	6	6	6	6	6	6	6	6	6	6	6	6	6	6	6	6	6	6	6	6	6	6	6	6	6	6	6	6	6	6	6	6	6	6	6	6	6	6	6
			Exposed	6	6	6	6	6	6	6	6	6	6	6	6	6	6	6	6	6	6	6	6	6	6	6	6	6	6	6	6	6	6	6	6	5	6	6	7	6	5	6
		7-20	Interior	6	6	6	6	6	6	6	6	6	6	6	6	6	6	6	6	6	6	6	6	6	6	6	6	6	6	6	6	6	6	6	6	6	6	6	6	6	6	5
			Exposed	6	6	6	6	6	6	6	6	6	6	6	6	6	6	6	6	6	6	6	6	6	6	6	6	6	6	6	6	6	5	6	6	7	6	5	6	6	5	5
		20-27	Interior	8	8	8	8	8	8	8	8	8	8	8	8	8	8	8	8	8	8	8	8	8	8	8	8	8	8	8	8	8	8	8	8	8	8	8	7	8	8	6
			Exposed	8	8	8	8	8	8	8	8	8	8	8	8	8	8	8	8	8	8	8	8	8	8	8	8	8	8	7	8	7	6	8	6	5	8	6	5	8	5	6
		27-45	Interior	10	10	10	10	10	10	10	10	10	10	10	10	10	10	10	10	10	10	10	10	10	10	10	10	10	10	10	9	9	9	9	9	9	9	9	9	8	8	8
			Exposed	10	10	10	10	10	10	10	10	10	10	10	10	10	10	10	10	10	10	10	10	10	10	10	10	10	10	9	9	9	7	9	8	6	8	7	6	7	6	5
	C	0-7	Interior	6	6	6	6	6	6	6	6	6	6	6	6	6	6	6	6	6	6	6	6	6	6	6	6	6	6	6	6	6	6	6	6	5	6	6	7	6	6	6
			Exposed	6	6	6	6	6	6	6	6	6	6	6	6	6	6	6	6	6	6	6	6	6	6	6	6	6	6	7	6	6	6	6	5	5	6	6	4	5	6	4
		7-20	Interior	6	6	6	6	6	6	6	6	6	6	6	6	6	6	6	6	6	6	6	6	6	6	6	6	6	6	6	6	6	5	6	6	5	6	5	6	6	5	5
			Exposed	6	6	6	6	6	6	6	6	6	6	6	6	6	6	6	6	6	6	6	6	5	6	6	5	6	5	6	6	5	5	6	6	5	5	5	4	7	5	3
		20-27	Interior	8	8	8	8	8	8	8	8	8	8	8	8	8	8	8	8	8	8	8	8	8	8	8	8	8	8	7	8	8	6	8	7	6	7	6	5	7	5	7
			Exposed	8	8	8	8	8	8	8	8	8	8	8	8	8	8	8	8	8	7	8	8	7	8	7	6	8	6	5	8	5	6	8	7	6	7	6	5	6	5	4
		27-45	Interior	10	10	10	10	10	10	10	10	10	10	10	10	10	10	10	10	10	10	10	10	10	9	9	9	9	9	9	8	8	8	8	8	7	8	8	6	7	7	5
			Exposed	10	10	10	10	10	10	10	10	10	10	10	10	10	10	10	10	10	9	10	10	8	9	9	7	8	7	6	7	6	5	6	6	7	5	5	6	5	7	5
	D	0-7	Interior	7	7	7	7	7	7	7	7	7	7	7	7	7	7	7	7	7	7	7	7	7	7	7	7	7	7	6	7	7	5	7	6	7	7	5	6	7	5	5
			Exposed	7	7	7	7	7	7	7	7	7	7	7	7	7	7	6	7	7	6	7	7	5	7	6	7	7	5	6	6	7	5	5	6	4	5	5	4	7	5	3
		7-20	Interior	7	7	7	7	7	7	7	7	7	7	7	7	7	7	7	7	7	7	7	7	7	7	7	6	7	7	5	7	6	7	7	5	6	6	7	5	6	6	4
			Exposed	7	7	7	7	7	7	7	7	7	7	7	7	7	7	5	7	7	5	7	6	7	7	5	6	6	7	5	5	6	4	5	5	4	6	4	3	5	4	3
		20-27	Interior	8	8	8	8	8	8	8	8	8	8	8	8	8	8	8	8	8	8	8	8	8	8	8	7	8	8	6	8	6	5	8	6	5	8	5	6	7	7	5
			Exposed	8	8	8	8	8	8	8	8	8	8	8	7	8	8	7	8	7	6	8	7	6	8	6	5	8	5	6	7	6	5	6	6	5	6	5	4	5	4	3
		27-45	Interior	11	11	11	11	11	11	11	11	11	11	11	11	10	10	10	10	10	10	10	10	10	9	9	9	9	9	7	8	8	6	8	7	6	7	6	5	6	5	7
			Exposed	11	11	11	11	11	11	11	11	10	11	11	9	10	10	8	10	9	7	10	9	7	8	7	6	7	6	5	6	5	6	5	7	6	7	6	5	6	5	4
100	B	0-7	Interior	5	5	5	5	5	5	5	5	5	5	5	5	5	5	5	5	5	5	5	5	5	5	5	5	5	5	5	5	5	5	5	5	5	5	5	5	5	5	5
			Exposed	5	5	5	5	5	5	5	5	5	5	5	5	5	5	5	5	5	5	5	5	5	5	5	5	5	5	5	5	5	5	5	5	5	5	5	7	5	5	6
		7-20	Interior	5	5	5	5	5	5	5	5	5	5	5	5	5	5	5	5	5	5	5	5	5	5	5	5	5	5	5	5	5	5	5	5	5	5	5	5	5	5	5
			Exposed	5	5	5	5	5	5	5	5	5	5	5	5	5	5	5	5	5	5	5	5	5	5	5	5	5	5	5	5	5	5	5	5	7	5	5	6	5	5	5
		20-27	Interior	7	7	7	7	7	7	7	7	7	7	7	7	7	7	7	7	7	7	7	7	7	7	7	7	7	7	7	7	7	7	7	7	7	7	7	7	7	7	6
			Exposed	7	7	7	7	7	7	7	7	7	7	7	7	7	7	7	7	7	7	7	7	7	7	7	7	7	7	7	7	7	6	7	6	5	7	6	5	7	5	6
		27-45	Interior	9	9	9	9	9	9	9	9	9	9	9	9	9	9	9	9	9	9	9	9	9	9	9	9	9	9	9	9	9	9	8	8	8	8	8	8	8	8	8
			Exposed	9	9	9	9	9	9	9	9	9	9	9	9	9	9	9	9	9	9	9	9	9	9	9	9	9	9	9	9	9	7	8	8	6	8	7	6	7	6	5
	C	0-7	Interior	5	5	5	5	5	5	5	5	5	5	5	5	5	5	5	5	5	5	5	5	5	5	5	5	5	5	5	5	5	5	5	5	5	5	5	7	5	5	6
			Exposed	5	5	5	5	5	5	5	5	5	5	5	5	5	5	5	5	5	5	5	5	5	5	5	5	5	5	7	5	5	6	5	5	5	5	6	4	5	6	4
		7-20	Interior	5	5	5	5	5	5	5	5	5	5	5	5	5	5	5	5	5	5	5	5	5	5	5	5	5	5	5	5	5	5	5	5	5	5	5	6	5	5	5
			Exposed	5	5	5	5	5	5	5	5	5	5	5	5	5	5	5	5	5	5	5	5	5	5	5	5	5	5	6	5	5	5	5	6	5	5	5	4	7	5	3
		20-27	Interior	7	7	7	7	7	7	7	7	7	7	7	7	7	7	7	7	7	7	7	7	7	7	7	7	7	7	7	7	7	6	7	7	6	7	6	5	7	5	7
			Exposed	7	7	7	7	7	7	7	7	7	7	7	7	7	7	7	7	7	7	7	7	7	7	7	6	7	6	5	7	5	6	7	7	6	7	6	5	6	5	4
		27-45	Interior	9	9	9	9	9	9	9	9	9	9	9	9	9	9	9	9	9	9	9	9	9	9	9	9	9	9	9	8	8	8	8	8	7	7	6	7	7	5	7
			Exposed	9	9	9	9	9	9	9	9	9	9	9	9	9	9	9	9	9	9	9	9	8	9	9	7	8	7	6	7	6	5	6	6	7	5	5	6	5	7	5
	D	0-7	Interior	6	6	6	6	6	6	6	6	6	6	6	6	6	6	6	6	6	6	6	6	6	6	6	6	6	6	6	6	6	5	6	6	7	6	5	6	6	5	5
			Exposed	6	6	6	6	6	6	6	6	6	6	6	6	6	6	6	6	6	6	6	6	5	6	6	7	6	5	6	6	7	5	5	6	4	5	5	4	7	5	3
		7-20	Interior	6	6	6	6	6	6	6	6	6	6	6	6	6	6	6	6	6	6	6	6	6	6	6	6	6	6	5	6	6	7	6	5	6	6	7	5	6	6	4
			Exposed	6	6	6	6	6	6	6	6	6	6	6	6	6	6	5	6	6	5	6	6	7	5	6	6	6	7	5	5	6	4	5	5	4	6	4	3	5	4	3
		20-27	Interior	8	8	8	8	8	8	8	8	8	8	8	8	8	8	8	8	8	8	8	8	8	8	8	7	8	8	6	8	6	5	7	6	5	7	5	6	7	7	5
			Exposed	8	8	8	8	8	8	8	8	8	8	8	7	8	8	7	8	7	6	8	7	6	8	6	5	8	5	6	7	6	5	6	6	5	6	5	4	5	4	3
		27-45	Interior	10	10	10	10	10	10	10	10	10	10	10	10	10	10	10	9	9	9	9	9	9	9	9	9	8	8	7	8	8	6	7	7	6	7	6	5	6	5	7
			Exposed	10	10	10	10	10	10	10	10	10	10	10	9	10	10	8	9	9	7	9	9	7	8	7	6	7	6	5	6	5	6	5	7	6	7	6	5	6	5	4

* Cells with an astrisks indicates that the L-foot must be oriented in the Y- direction as indicated in the image.

10 Highlighted cell indicate 3-rail system span. Contact Unirac Engineering Services for support.

~~10~~ Highlighted cell with strikethrough indicate 3-rail system span and module clamp allowable capacity exceeds with 3-rails. 4-Rail system required. Contact Unirac Engineering Services for support.

UNIRAC

ASCE 7-22	II	30 ft	Ss = 3.00	23 sq.ft	LANDSCAPE	CROSS-SLOPE	NXT	NXT COMBO	Stronghold BUTYL OSB
Design Standard	Risk Category	Roof Height	Seismic	Module Area	Orientation	Rail Direction	Rail Type	Clamp	Attachment

SPAN TABLES

Maximum Allowable Rail Spans for Rooftop Solar Panels Parallel to the Roof Surface (inches)

Ground Snow Load (psf)	Wind Exposure Category	Roof Tilt Angle (deg)	Panel Exposure	Basic Wind Speed (mph)																																						
				90			95			100			105			110			115			120			130			140			150			160			170			180		
				Roof Wind Zone																																						
				1	2	3	1	2	3	1	2	3	1	2	3	1	2	3	1	2	3	1	2	3	1	2	3	1	2	3	1	2	3	1	2	3	1	2	3	1	2	3
0	B	0-7	Interior	56	56	54	56	56	48	56	56	43	56	55	38	56	50	35	56	45	31	56	41	29	48	35	24	41	29	21	35	25	18	31	22	15	27	19	14	24	17	12
			Exposed	56	50	35	56	44	31	55	39	27	49	35	25	45	32	22	40	29	20	37	26	19	31	22	16	26	19	13	23	16	12	20	14	10	17	13	9	15	11	12
		7-20	Interior	56	56	47	56	56	42	56	51	37	56	46	34	56	42	30	53	38	28	48	34	25	40	29	21	34	25	18	29	21	16	26	19	14	22	16	12	20	14	11
			Exposed	56	41	30	51	37	27	46	33	24	41	30	22	37	27	20	34	24	18	31	22	16	26	19	14	22	16	12	19	14	10	17	12	9	15	11	12	13	9	10
		20-27	Interior	57	57	57	57	57	51	57	56	45	57	50	41	57	45	37	57	41	33	57	37	31	55	31	26	46	27	22	40	23	19	35	20	16	30	18	14	27	16	13
			Exposed	57	45	37	57	40	33	57	36	29	56	32	26	51	29	24	46	26	22	42	24	20	35	20	17	30	17	14	26	15	12	22	13	11	20	11	9	17	10	8
		27-45	Interior	57	57	57	57	57	57	57	57	54	57	57	49	57	56	44	57	51	40	52	47	37	44	39	31	37	33	26	32	29	23	28	25	20	25	22	17	22	20	15
			Exposed	57	56	44	56	50	39	50	45	35	45	40	32	41	36	29	37	33	26	34	30	24	28	25	20	24	22	17	21	19	15	18	16	13	16	14	11	14	13	10
	C	0-7	Interior	56	53	37	56	47	32	56	42	29	52	37	26	47	34	24	43	31	21	39	28	20	33	24	17	28	20	14	24	17	12	21	15	11	18	13	9	16	12	13
			Exposed	47	34	24	42	30	21	37	27	19	33	24	17	30	22	15	27	20	14	25	18	13	21	15	11	18	13	9	16	11	12	14	10	11	12	13	9	11	12	~~8~~
		7-20	Interior	56	44	32	54	39	28	48	35	26	43	31	23	39	28	21	36	26	19	32	23	17	27	20	15	23	17	12	20	15	11	17	13	9	15	11	13	14	10	11
			Exposed	39	28	21	35	25	18	31	22	17	28	20	15	25	18	13	23	17	12	21	15	11	18	13	9	15	11	12	13	9	11	11	13	9	10	11	~~8~~	9	10	~~7~~
		20-27	Interior	57	48	39	57	42	35	57	38	31	57	34	28	54	31	25	49	28	23	44	25	21	37	21	18	32	18	15	27	16	13	24	14	11	21	12	10	18	11	9
			Exposed	53	31	25	47	27	22	42	24	20	38	22	18	34	20	16	31	18	15	28	16	14	24	14	11	20	12	10	18	10	8	15	9	11	14	12	10	12	11	9
		27-45	Interior	57	57	47	57	53	41	53	47	37	48	42	33	43	38	30	39	35	28	36	32	25	30	27	21	26	23	18	22	20	16	19	17	14	17	15	12	15	13	11
			Exposed	43	38	30	38	34	27	34	31	24	31	28	22	28	25	20	25	23	18	23	21	16	20	18	14	17	15	12	14	13	10	13	11	9	11	10	12	10	9	11
	D	0-7	Interior	56	43	30	54	39	27	48	34	24	43	31	22	39	28	20	35	25	18	32	23	16	27	20	14	23	17	12	20	14	10	17	13	9	15	11	12	13	10	10
			Exposed	39	28	20	34	25	17	31	22	16	28	20	14	25	18	13	23	16	12	21	15	11	17	13	9	15	11	12	13	9	10	11	12	9	10	11	~~8~~	9	10	~~7~~
		7-20	Interior	50	36	27	45	32	24	40	29	21	36	26	19	32	23	17	29	21	16	27	19	14	23	16	12	19	14	10	17	12	9	15	11	12	13	9	10	11	13	9
			Exposed	32	23	17	29	21	15	26	19	14	23	17	12	21	15	11	19	14	10	17	13	9	15	11	12	13	9	10	11	12	9	9	10	~~8~~	8	9	~~7~~	11	~~8~~	~~6~~
		20-27	Interior	57	39	32	57	35	29	55	31	26	49	28	23	44	25	21	40	23	19	37	21	17	31	18	15	26	15	13	23	13	11	20	11	9	17	10	8	15	9	11
			Exposed	44	25	21	39	23	19	35	20	17	31	18	15	28	16	14	26	15	12	24	14	11	20	12	9	17	10	12	15	8	11	13	11	9	11	10	~~8~~	10	9	~~7~~
		27-45	Interior	55	49	39	49	44	34	44	39	31	39	35	28	36	32	25	32	29	23	30	26	21	25	22	18	21	19	15	18	17	13	16	14	11	14	13	10	13	11	9
			Exposed	36	32	25	32	28	22	28	25	20	26	23	18	23	21	16	21	19	15	19	17	14	16	15	11	14	12	10	12	11	8	10	9	11	9	13	10	12	11	9
10	B	0-7	Interior	45	45	45	45	45	45	45	45	43	45	45	38	45	45	35	45	45	31	45	41	29	45	35	24	41	29	21	35	25	18	31	22	15	27	19	14	24	17	12
			Exposed	45	45	35	45	44	31	45	39	27	45	35	25	45	32	22	40	29	20	37	26	19	31	22	16	26	19	13	23	16	12	20	14	10	17	13	9	15	11	12
		7-20	Interior	45	45	45	45	45	42	45	45	37	45	45	34	45	42	30	45	38	28	45	34	25	40	29	21	34	25	18	29	21	16	26	19	14	22	16	12	20	14	11
			Exposed	45	41	30	45	37	27	45	33	24	41	30	22	37	27	20	34	24	18	31	22	16	26	19	14	22	16	12	19	14	10	17	12	9	15	11	12	13	9	10
		20-27	Interior	52	52	52	52	52	51	52	52	45	52	50	41	52	45	37	52	41	33	52	37	31	52	31	26	46	27	22	40	23	19	35	20	16	30	18	14	27	16	13
			Exposed	52	45	37	52	40	33	52	36	29	52	32	26	51	29	24	46	26	22	42	24	20	35	20	17	30	17	14	26	15	12	22	13	11	20	11	9	17	10	8
		27-45	Interior	56	56	56	56	56	56	56	56	54	56	56	49	56	56	44	56	51	40	52	47	37	44	39	31	37	33	26	32	29	23	28	25	20	25	22	17	22	20	15
			Exposed	56	56	44	56	50	39	50	45	35	45	40	32	41	36	29	37	33	26	34	30	24	28	25	20	24	22	17	21	19	15	18	16	13	16	14	11	14	13	10
	C	0-7	Interior	45	45	37	45	45	32	45	42	29	45	37	26	45	34	24	43	31	21	39	28	20	33	24	17	28	20	14	24	17	12	21	15	11	18	13	9	16	12	13
			Exposed	45	34	24	42	30	21	37	27	19	33	24	17	30	22	15	27	20	14	25	18	13	21	15	11	18	13	9	16	11	12	14	10	11	12	13	9	11	12	~~8~~
		7-20	Interior	45	44	32	45	39	28	45	35	26	43	31	23	39	28	21	36	26	19	32	23	17	27	20	15	23	17	12	20	15	11	17	13	9	15	11	13	14	10	11
			Exposed	39	28	21	35	25	18	31	22	17	28	20	15	25	18	13	23	17	12	21	15	11	18	13	9	15	11	12	13	9	11	11	13	9	10	11	~~8~~	9	10	~~7~~
		20-27	Interior	52	48	39	52	42	35	52	38	31	52	34	28	52	31	25	49	28	23	44	25	21	37	21	18	32	18	15	27	16	13	24	14	11	21	12	10	18	11	9
			Exposed	52	31	25	47	27	22	42	24	20	38	22	18	34	20	16	31	18	15	28	16	14	24	14	11	20	12	10	18	10	8	15	9	11	14	12	10	12	11	9
		27-45	Interior	56	56	47	56	53	41	53	47	37	48	42	33	43	38	30	39	35	28	36	32	25	30	27	21	26	23	18	22	20	16	19	17	14	17	15	12	15	13	11
			Exposed	43	38	30	38	34	27	34	31	24	31	28	22	28	25	20	25	23	18	23	21	16	20	18	14	17	15	12	14	13	10	13	11	9	11	10	12	10	9	11
	D	0-7	Interior	45	43	30	45	39	27	45	34	24	43	31	22	39	28	20	35	25	18	32	23	16	27	20	14	23	17	12	20	14	10	17	13	9	15	11	12	13	10	10
			Exposed	39	28	20	34	25	17	31	22	16	28	20	14	25	18	13	23	16	12	21	15	11	17	13	9	15	11	12	13	9	10	11	12	9	10	11	~~8~~	9	10	~~7~~
		7-20	Interior	45	36	27	45	32	24	40	29	21	36	26	19	32	23	17	29	21	16	27	19	14	23	16	12	19	14	10	17	12	9	15	11	12	13	9	10	11	13	9
			Exposed	32	23	17	29	21	15	26	19	14	23	17	12	21	15	11	19	14	10	17	13	9	15	11	12	13	9	10	11	12	9	9	10	~~8~~	8	9	~~7~~	11	~~8~~	~~6~~
		20-27	Interior	53	39	32	53	35	29	53	31	26	49	28	23	44	25	21	40	23	19	37	21	17	31	18	15	26	15	13	23	13	11	20	11	9	17	10	8	15	9	11
			Exposed	44	25	21	39	23	19	35	20	17	31	18	15	28	16	14	26	15	12	24	14	11	20	12	9	17	10	12	15	8	11	13	11	9	11	10	~~8~~	10	9	~~7~~
		27-45	Interior	55	49	39	49	44	34	44	39	31	39	35	28	36	32	25	32	29	23	30	26	21	25	22	18	21	19	15	18	17	13	16	14	11	14	13	10	13	11	9
			Exposed	36	32	25	32	28	22	28	25	20	26	23	18	23	21	16	21	19	15	19	17	14	16	15	11	14	12	10	12	11	8	10	9	11	9	13	10	12	11	9
20	B	0-7	Interior	33	33	33	33	33	33	33	33	33	33	33	33	33	33	33	33	33	31	33	33	29	33	33	24	33	29	21	33	25	18	31	22	15	27	19	14	24	17	12
			Exposed	33	33	33	33	33	31	33	33	27	33	33	25	33	32	22	33	29	20	33	26	19	31	22	16	26	19	13	23	16	12	20	14	10	17	13	9	15	11	12
		7-20	Interior	34	34	34	34	34	34	34	34	34	34	34	34	34	34	30	34	34	28	34	34	25	34	29	21	34	25	18	29	21	16	26	19	14	22	16	12	20	14	11
			Exposed	34	34	30	34	34	27	34	33	24	34	30	22	34	27	20	34	24	18	31	22	16	26	19	14	22	16	12	19	14	10	17	12	9	15	11	12	13	9	10
		20-27	Interior	41	41	41	41	41	41	41	41	41	41	41	41	41	41	37	41	41	33	41	37	31	41	31	26	41	27	22	40	23	19	35	20	16	30	18	14	27	16	13
			Exposed	41	41	37	41	40	33	41	36	29	41	32	26	41	29	24	41	26	22	41	24	20	35	20	17	30	17	14	26	15	12	22	13	11	20	11	9	17	10	8
		27-45	Interior	46	46	46	46	46	46	46	46	46	46	46	46	46	46	44	46	46	40	46	46	37	44	39	31	37	33	26	32	29	23	28	25	20	25	22	17	22	20	15
			Exposed	46	46	44	46	46	39	46	45	35	45	40	32	41	36	29	37	33	26	34	30	24	28	25	20	24	22	17	21	19	15	18	16	13	16	14	11	14	13	10
	C	0-7	Interior	33	33	33	33	33	32	33	33	29	33	33	26	33	33	24	33	31	21	33	28	20	33	24	17	28	20	14	24	17	12	21	15	11	18	13	9	16	12	13
			Exposed	33	33	24	33	30	21	33	27	19	33	24	17	30	22	15	27	20	14	25	18	13	21	15	11	18	13	9	16	11	12	14	10	11	12	13	9	11	12	~~8~~
		7-20	Interior	34	34	32	34	34	28	34	34	26	34	31	23	34	28	21	34	26	19	32	23	17	27	20	15	23	17	12	20	15	11	17	13	9	15	11	13	14	10	11
			Exposed	34	28	21	34	25	18	31	22	17	28	20	15	25	18	13	23	17	12	21	15	11	18	13	9	15	11	12	13	9	11	11	13	9	10	11	~~8~~	9	10	~~7~~
		20-27	Interior	41	41	39	41	41	35	41	38	31	41	34	28	41	31	25	41	28	23	41	25	21	37	21	18	32	18	15	27	16	13	24	14	11	21	12	10	18	11	9
			Exposed	41	31	25	41	27	22	41	24	20	38	22	18	34	20	16	31	18	15	28	16	14	24	14	11	20	12	10	18	10	8	15	9	11	14	12	10	12	11	9
		27-45	Interior	46	46	46	46	46	41	46	46	37	46	42	33	43	38	30	39	35	28	36	32	25	30	27	21	26	23	18	22	20	16	19	17	14	17	15	12	15	13	11
			Exposed	43	38	30	38	34	27	34	31	24	31	28	22	28	25	20	25	23	18	23	21	16	20	18	14	17	15	12	14	13	10	13	11	9	11	10	12	10	9	11
	D	0-7	Interior	33	33	30	33	33	27	33	33	24	33	31	22	33	28	20	33	25	18	32	23	16	27	20	14	23	17	12	20	14	10	17	13	9	15	11	12	13	10	10
			Exposed	33	28	20	33	25	17	31	22	16	28	20	14	25	18	13	23	16	12	21	15	11	17	13	9	15	11	12	13	9	10	11	12	9	10	11	~~8~~	9	10	~~7~~
		7-20	Interior	34	34	27	34	32	24	34	29	21	34	26	19	32	23	17	29	21	16	27	19	14	23	16	12	19	14	10	17	12	9	15	11	12	13	9	10	11	13	9
			Exposed	32	23	17	29	21	15	26	19	14	23	17	12	21	15	11	19	14	10	17	13	9	15	11	12	13	9	10	11	12	9	9	10	~~8~~	8	9	~~7~~	11	~~8~~	~~6~~
		20-27	Interior	43	39	32	43	35	29	43	31	26	43	28	23	43	25	21	40	23	19	37	21	17	31	18	15	26	15	13	23	13	11	20	11	9	17	10	8	15	9	11
			Exposed	43	25	21	39	23	19	35	20	17	31	18	15	28	16	14	26	15	12	24	14	11	20	12	9	17	10	12	15	8	11	13	11	9	11	10	~~8~~	10	9	~~7~~
		27-45	Interior	47	47	39	47	44	34	44	39	31	39	35	28	36	32	25	32	29	23	30	26	21	25	22	18	21	19	15	18	17	13	16	14	11	14	13	10	13	11	9
			Exposed	36	32	25	32	28	22	28	25	20	26	23	18	23	21	16	21	19	15	19	17	14	16	15	11	14	12	10	12	11	8	10	9	11	9	13	10	12	11	9

*	Cells with an astrisks indicates that the L-foot must be oriented in the Y- direction as indicated in the image.
10	Highlighted cell indicate 3-rail system span. Contact Unirac Engineering Services for support.
~~10~~	Highlighted cell with strikethrough indicate 3-rail system span and module clamp allowable capacity exceeds with 3-rails. 4-Rail system required. Contact Unirac Engineering Services for support.

UNIRAC

ASCE 7-22	II	30 ft	Ss = 3.00	23 sq.ft	LANDSCAPE	CROSS-SLOPE	NXT	NXT COMBO	Stronghold BUTYL OSB
Design Standard	Risk Category	Roof Height	Seismic	Module Area	Orientation	Rail Direction	Rail Type	Clamp	Attachment

SPAN TABLES

Maximum Allowable Rail Spans for Rooftop Solar Panels Parallel to the Roof Surface (inches)

Ground Snow Load (psf)	Wind Exposure Category	Roof Tilt Angle (deg)	Panel Exposure	Basic Wind Speed (mph)																																						
				90			95			100			105			110			115			120			130			140			150			160			170			180		
				Roof Wind Zone																																						
				1	2	3	1	2	3	1	2	3	1	2	3	1	2	3	1	2	3	1	2	3	1	2	3	1	2	3	1	2	3	1	2	3	1	2	3	1	2	3
30	B	0-7	Interior	27	27	27	27	27	27	27	27	27	27	27	27	27	27	27	27	27	27	27	27	27	27	27	24	27	27	21	27	25	18	27	22	15	27	19	14	24	17	12
			Exposed	27	27	27	27	27	27	27	27	27	27	27	25	27	27	22	27	27	20	27	26	19	27	22	16	26	19	13	23	16	12	20	14	10	17	13	9	15	11	12
		7-20	Interior	27	27	27	27	27	27	27	27	27	27	27	27	27	27	27	27	27	27	27	27	25	27	27	21	27	25	18	27	21	16	26	19	14	22	16	12	20	14	11
			Exposed	27	27	27	27	27	27	27	27	24	27	27	22	27	27	20	27	24	18	27	22	16	26	19	14	22	16	12	19	14	10	17	12	9	15	11	12	13	9	10
		20-27	Interior	34	34	34	34	34	34	34	34	34	34	34	34	34	34	34	34	34	33	34	34	31	34	31	26	34	27	22	34	23	19	34	20	16	30	18	14	27	16	13
			Exposed	34	34	34	34	34	33	34	34	29	34	32	26	34	29	24	34	26	22	34	24	20	34	20	17	30	17	14	26	15	12	22	13	11	20	11	9	17	10	8
		27-45	Interior	38	38	38	38	38	38	38	38	38	38	38	38	38	38	38	38	38	38	38	38	37	38	38	31	37	33	26	32	29	23	28	25	20	25	22	17	22	20	15
			Exposed	38	38	38	38	38	38	38	38	35	38	38	32	38	36	29	37	33	26	34	30	24	28	25	20	24	22	17	21	19	15	18	16	13	16	14	11	14	13	10
	C	0-7	Interior	27	27	27	27	27	27	27	27	27	27	27	26	27	27	24	27	27	21	27	27	20	27	24	17	27	20	14	24	17	12	21	15	11	18	13	9	16	12	13
			Exposed	27	27	24	27	27	21	27	27	19	27	24	17	27	22	15	27	20	14	25	18	13	21	15	11	18	13	9	16	11	12	14	10	11	12	13	9	11	12	8
		7-20	Interior	27	27	27	27	27	27	27	27	26	27	27	23	27	27	21	27	26	19	27	23	17	27	20	15	23	17	12	20	15	11	17	13	9	15	11	13	14	10	11
			Exposed	27	27	21	27	25	18	27	22	17	27	20	15	25	18	13	23	17	12	21	15	11	18	13	9	15	11	12	13	9	11	11	13	9	10	11	8	9	10	7
		20-27	Interior	34	34	34	34	34	34	34	34	31	34	34	28	34	31	25	34	28	23	34	25	21	34	21	18	32	18	15	27	16	13	24	14	11	21	12	10	18	11	9
			Exposed	34	31	25	34	27	22	34	24	20	34	22	18	34	20	16	31	18	15	28	16	14	24	14	11	20	12	10	18	10	8	15	9	11	14	12	10	12	11	9
		27-45	Interior	38	38	38	38	38	38	38	38	37	38	38	33	38	38	30	38	35	28	36	32	25	30	27	21	26	23	18	22	20	16	19	17	14	17	15	12	15	13	11
			Exposed	38	38	30	38	34	27	34	31	24	31	28	22	28	25	20	25	23	18	23	21	16	20	18	14	17	15	12	14	13	10	13	11	9	11	10	12	10	9	11
	D	0-7	Interior	27	27	27	27	27	27	27	27	24	27	27	22	27	27	20	27	25	18	27	23	16	27	20	14	23	17	12	20	14	10	17	13	9	15	11	12	13	10	10
			Exposed	27	27	20	27	25	17	27	22	16	27	20	14	25	18	13	23	16	12	21	15	11	17	13	9	15	11	12	13	9	10	11	12	9	10	11	8	9	10	7
		7-20	Interior	27	27	27	27	27	24	27	27	21	27	26	19	27	23	17	27	21	16	27	19	14	23	16	12	19	14	10	17	12	9	15	11	12	13	9	10	11	13	9
			Exposed	27	23	17	27	21	15	26	19	14	23	17	12	21	15	11	19	14	10	17	13	9	15	11	12	13	9	10	11	12	9	9	10	8	8	9	7	11	8	6
		20-27	Interior	36	36	32	36	35	29	36	31	26	36	28	23	36	25	21	36	23	19	36	21	17	31	18	15	26	15	13	23	13	11	20	11	9	17	10	8	15	9	11
			Exposed	36	25	21	36	23	19	35	20	17	31	18	15	28	16	14	26	15	12	24	14	11	20	12	9	17	10	12	15	8	11	13	11	9	11	10	8	10	9	7
		27-45	Interior	40	40	39	40	40	34	40	39	31	39	35	28	36	32	25	32	29	23	30	26	21	25	22	18	21	19	15	18	17	13	16	14	11	14	13	10	13	11	9
			Exposed	36	32	25	32	28	22	28	25	20	26	23	18	23	21	16	21	19	15	19	17	14	16	15	11	14	12	10	12	11	8	10	9	11	9	13	10	12	11	9
40	B	0-7	Interior	25	25	25	25	25	25	25	25	25	25	25	25	25	25	25	25	25	25	25	25	25	25	25	24	25	25	21	25	25	18	25	22	15	25	19	14	24	17	12
			Exposed	25	25	25	25	25	25	25	25	25	25	25	25	25	25	22	25	25	20	25	25	19	25	22	16	25	19	13	23	16	12	20	14	10	17	13	9	15	11	12
		7-20	Interior	25	25	25	25	25	25	25	25	25	25	25	25	25	25	25	25	25	25	25	25	25	25	25	21	25	25	18	25	21	16	25	19	14	22	16	12	20	14	11
			Exposed	25	25	25	25	25	25	25	25	24	25	25	22	25	25	20	25	24	18	25	22	16	25	19	14	22	16	12	19	14	10	17	12	9	15	11	12	13	9	10
		20-27	Interior	29	29	29	29	29	29	29	29	29	29	29	29	29	29	29	29	29	29	29	29	29	29	29	26	29	27	22	29	23	19	29	20	16	28	18	14	27	16	13
			Exposed	29	29	29	29	29	29	29	29	29	29	29	26	29	29	24	29	26	22	29	24	20	29	20	17	29	17	14	26	15	12	22	13	11	20	11	9	17	10	8
		27-45	Interior	33	33	33	33	33	33	33	33	33	33	33	33	33	33	33	33	33	33	33	33	33	33	33	31	32	32	26	30	29	23	28	25	20	25	22	17	22	20	15
			Exposed	33	33	33	33	33	33	33	33	33	33	33	32	33	33	29	33	33	26	33	30	24	28	25	20	24	22	17	21	19	15	18	16	13	16	14	11	14	13	10
	C	0-7	Interior	25	25	25	25	25	25	25	25	25	25	25	25	25	25	24	25	25	21	25	25	20	25	24	17	25	20	14	24	17	12	21	15	11	18	13	9	16	12	13
			Exposed	25	25	24	25	25	21	25	25	19	25	24	17	25	22	15	25	20	14	25	18	13	21	15	11	18	13	9	16	11	12	14	10	11	12	13	9	11	12	8
		7-20	Interior	25	25	25	25	25	25	25	25	25	25	25	23	25	25	21	25	25	19	25	23	17	25	20	15	23	17	12	20	15	11	17	13	9	15	11	13	14	10	11
			Exposed	25	25	21	25	25	18	25	22	17	25	20	15	25	18	13	23	17	12	21	15	11	18	13	9	15	11	12	13	9	11	11	13	9	10	11	8	9	10	7
		20-27	Interior	29	29	29	29	29	29	29	29	29	29	29	28	29	29	25	29	28	23	29	25	21	29	21	18	28	18	15	27	16	13	24	14	11	21	12	10	18	11	9
			Exposed	29	29	25	29	27	22	29	24	20	29	22	18	29	20	16	29	18	15	28	16	14	24	14	11	20	12	10	18	10	8	15	9	11	14	12	10	12	11	9
		27-45	Interior	33	33	33	33	33	33	33	33	33	33	33	33	33	33	30	33	33	28	32	32	25	30	27	21	26	23	18	22	20	16	19	17	14	17	15	12	15	13	11
			Exposed	33	33	30	33	33	27	33	31	24	31	28	22	28	25	20	25	23	18	23	21	16	20	18	14	17	15	12	14	13	10	13	11	9	11	10	12	10	9	11
	D	0-7	Interior	26	26	26	26	26	26	26	26	24	26	26	22	26	26	20	26	25	18	26	23	16	26	20	14	23	17	12	20	14	10	17	13	9	15	11	12	13	10	10
			Exposed	26	26	20	26	25	17	26	22	16	26	20	14	25	18	13	23	16	12	21	15	11	17	13	9	15	11	12	13	9	10	11	12	9	10	11	8	9	10	7
		7-20	Interior	27	27	27	27	27	24	27	27	21	27	26	19	27	23	17	27	21	16	27	19	14	23	16	12	19	14	10	17	12	9	15	11	12	13	9	10	11	13	9
			Exposed	27	23	17	27	21	15	26	19	14	23	17	12	21	15	11	19	14	10	17	13	9	15	11	12	13	9	10	11	12	9	9	10	8	8	9	7	11	8	6
		20-27	Interior	31	31	31	31	31	29	31	31	26	31	28	23	31	25	21	31	23	19	31	21	17	30	18	15	26	15	13	23	13	11	20	11	9	17	10	8	15	9	11
			Exposed	31	25	21	31	23	19	31	20	17	31	18	15	28	16	14	26	15	12	24	14	11	20	12	9	17	10	12	15	8	11	13	11	9	11	10	8	10	9	7
		27-45	Interior	35	35	35	35	35	34	35	35	31	34	34	28	33	32	25	32	29	23	30	26	21	25	22	18	21	19	15	18	17	13	16	14	11	14	13	10	13	11	9
			Exposed	35	32	25	32	28	22	28	25	20	26	23	18	23	21	16	21	19	15	19	17	14	16	15	11	14	12	10	12	11	8	10	9	11	9	13	10	12	11	9
50	B	0-7	Interior	21	21	21	21	21	21	21	21	21	21	21	21	21	21	21	21	21	21	21	21	21	21	21	21	21	21	21	21	21	18	21	21	15	21	19	14	21	17	12
			Exposed	21	21	21	21	21	21	21	21	21	21	21	21	21	21	21	21	21	20	21	21	19	21	21	16	21	19	13	21	16	12	20	14	10	17	13	9	15	11	12
		7-20	Interior	21	21	21	21	21	21	21	21	21	21	21	21	21	21	21	21	21	21	21	21	21	21	21	21	21	21	18	21	21	16	21	19	14	21	16	12	20	14	11
			Exposed	21	21	21	21	21	21	21	21	21	21	21	21	21	21	20	21	21	18	21	21	16	21	19	14	21	16	12	19	14	10	17	12	9	15	11	12	13	9	10
		20-27	Interior	25	25	25	25	25	25	25	25	25	25	25	25	25	25	25	25	25	25	25	25	25	25	25	25	25	25	22	25	23	19	25	20	16	24	18	14	24	16	13
			Exposed	25	25	25	25	25	25	25	25	25	25	25	25	25	25	24	25	25	22	25	24	20	25	20	17	25	17	14	25	15	12	22	13	11	20	11	9	17	10	8
		27-45	Interior	29	29	29	29	29	29	29	29	29	29	29	29	29	29	29	29	29	29	29	29	29	29	29	29	28	28	26	27	27	23	26	25	20	24	22	17	22	20	15
			Exposed	29	29	29	29	29	29	29	29	29	29	29	29	29	29	29	29	29	26	29	29	24	28	25	20	24	22	17	21	19	15	18	16	13	16	14	11	14	13	10
	C	0-7	Interior	21	21	21	21	21	21	21	21	21	21	21	21	21	21	21	21	21	21	21	21	20	21	21	17	21	20	14	21	17	12	21	15	11	18	13	9	16	12	13
			Exposed	21	21	21	21	21	21	21	21	19	21	21	17	21	21	15	21	20	14	21	18	13	21	15	11	18	13	9	16	11	12	14	10	11	12	13	9	11	12	8
		7-20	Interior	21	21	21	21	21	21	21	21	21	21	21	21	21	21	21	21	21	19	21	21	17	21	20	15	21	17	12	20	15	11	17	13	9	15	11	13	14	10	11
			Exposed	21	21	21	21	21	18	21	21	17	21	20	15	21	18	13	21	17	12	21	15	11	18	13	9	15	11	12	13	9	11	11	13	9	10	11	8	9	10	7
		20-27	Interior	25	25	25	25	25	25	25	25	25	25	25	25	25	25	25	25	25	23	25	25	21	25	21	18	25	18	15	24	16	13	23	14	11	21	12	10	18	11	9
			Exposed	25	25	25	25	25	22	25	24	20	25	22	18	25	20	16	25	18	15	25	16	14	24	14	11	20	12	10	18	10	8	15	9	11	14	12	10	12	11	9
		27-45	Interior	29	29	29	29	29	29	29	29	29	29	29	29	29	29	29	29	29	28	28	28	25	26	26	21	25	23	18	22	20	16	19	17	14	17	15	12	15	13	11
			Exposed	29	29	29	29	29	27	29	29	24	29	28	22	28	25	20	25	23	18	23	21	16	20	18	14	17	15	12	14	13	10	13	11	9	11	10	12	10	9	11
	D	0-7	Interior	23	23	23	23	23	23	23	23	23	23	23	22	23	23	20	23	23	18	23	23	16	23	20	14	23	17	12	20	14	10	17	13	9	15	11	12	13	10	10
			Exposed	23	23	20	23	23	17	23	22	16	23	20	14	23	18	13	23	16	12	21	15	11	17	13	9	15	11	12	13	9	10	11	12	9	10	11	8	9	10	7
		7-20	Interior	23	23	23	23	23	23	23	23	21	23	23	19	23	23	17	23	21	16	23	19	14	23	16	12	19	14	10	17	12	9	15	11	12	13	9	10	11	13	9
			Exposed	23	23	17	23	21	15	23	19	14	23	17	12	21	15	11	19	14	10	17	13	9	15	11	12	13	9	10	11	12	9	9	10	8	8	9	7	11	8	6
		20-27	Interior	27	27	27	27	27	27	27	27	26	27	27	23	27	25	21	27	23	19	27	21	17	26	18	15	25	15	13	23	13	11	20	11	9	17	10	8	15	9	11
			Exposed	27	25	21	27	23	19	27	20	17	27	18	15	27	16	14	26	15	12	24	14	11	20	12	9	17	10	12	15	8	11	13	11	9	11	10	8	10	9	7
		27-45	Interior	31	31	31	31	31	31	31	31	31	31	31	28	30	30	25	29	29	23	28	26	21	25	22	18	21	19	15	18	17	13	16	14	11	14	13	10	13	11	9
			Exposed	31	31	25	31	28	22	28	25	20	26	23	18	23	21	16	21	19	15	19	17	14	16	15	11	14	12	10	12	11	8	10	9	11	9	13	10	12	11	9

* Cells with an astrisks indicates that the L-foot must be oriented in the Y- direction as indicated in the image.

10 Highlighted cell indicate 3-rail system span. Contact Unirac Engineering Services for support.

~~10~~ Highlighted cell with strikethrough indicate 3-rail system span and module clamp allowable capacity exceeds with 3-rails. 4-Rail system required. Contact Unirac Engineering Services for support.

ASCE 7-22	II	30 ft	Ss = 3.00	23 sq.ft	LANDSCAPE	CROSS-SLOPE	NXT	NXT COMBO	Stronghold BUTYL OSB
Design Standard	Risk Category	Roof Height	Seismic	Module Area	Orientation	Rail Direction	Rail Type	Clamp	Attachment

SPAN TABLES

Maximum Allowable Rail Spans for Rooftop Solar Panels Parallel to the Roof Surface (inches)

Ground Snow Load (psf)	Wind Exposure Category	Roof Tilt Angle (deg)	Panel Exposure	Basic Wind Speed (mph) 90			95			100			105			110			115			120			130			140			150			160			170			180		
			Roof Wind Zone	1	2	3	1	2	3	1	2	3	1	2	3	1	2	3	1	2	3	1	2	3	1	2	3	1	2	3	1	2	3	1	2	3	1	2	3	1	2	3
60	B	0-7	Interior	18	18	18	18	18	18	18	18	18	18	18	18	18	18	18	18	18	18	18	18	18	18	18	18	18	18	18	18	18	18	18	18	15	18	18	14	18	17	12
			Exposed	18	18	18	18	18	18	18	18	18	18	18	18	18	18	18	18	18	18	18	18	18	18	18	16	18	18	13	18	16	12	18	14	10	17	13	9	15	11	12
		7-20	Interior	18	18	18	18	18	18	18	18	18	18	18	18	18	18	18	18	18	18	18	18	18	18	18	18	18	18	18	18	18	16	18	18	14	18	16	12	18	14	11
			Exposed	18	18	18	18	18	18	18	18	18	18	18	18	18	18	18	18	18	18	18	18	16	18	18	14	18	16	12	18	14	10	17	12	9	15	11	12	13	9	10
		20-27	Interior	22	22	22	22	22	22	22	22	22	22	22	22	22	22	22	22	22	22	22	22	22	22	22	22	22	22	22	22	22	19	22	20	16	22	18	14	21	16	13
			Exposed	22	22	22	22	22	22	22	22	22	22	22	22	22	22	22	22	22	22	22	22	20	22	20	17	22	17	14	22	15	12	22	13	11	20	11	9	17	10	8
		27-45	Interior	26	26	26	26	26	26	26	26	26	26	26	26	26	26	26	26	26	26	26	26	26	26	26	26	25	25	25	24	24	23	23	23	20	22	22	17	21	20	15
			Exposed	26	26	26	26	26	26	26	26	26	26	26	26	26	26	26	26	26	26	26	26	24	26	25	20	24	22	17	21	19	15	18	16	13	16	14	11	14	13	10
	C	0-7	Interior	18	18	18	18	18	18	18	18	18	18	18	18	18	18	18	18	18	18	18	18	18	18	18	17	18	18	14	18	17	12	18	15	11	18	13	9	16	12	13
			Exposed	18	18	18	18	18	18	18	18	18	18	18	17	18	18	15	18	18	14	18	18	13	18	15	11	18	13	9	16	11	12	14	10	11	12	13	9	11	12	~~8~~
		7-20	Interior	18	18	18	18	18	18	18	18	18	18	18	18	18	18	18	18	18	18	18	18	17	18	18	15	18	17	12	18	15	11	17	13	9	15	11	13	14	10	11
			Exposed	18	18	18	18	18	18	18	18	17	18	18	15	18	18	13	18	17	12	18	15	11	18	13	9	15	11	12	13	9	11	11	13	9	10	11	~~8~~	9	10	~~7~~
		20-27	Interior	22	22	22	22	22	22	22	22	22	22	22	22	22	22	22	22	22	22	22	22	21	22	21	18	22	18	15	21	16	13	20	14	11	20	12	10	18	11	9
			Exposed	22	22	22	22	22	22	22	22	20	22	22	18	22	20	16	22	18	15	22	16	14	22	14	11	20	12	10	18	10	8	15	9	11	14	12	10	12	11	9
		27-45	Interior	26	26	26	26	26	26	26	26	26	26	26	26	26	26	26	26	26	26	25	25	25	24	24	21	23	23	18	21	20	16	19	17	14	17	15	12	15	13	11
			Exposed	26	26	26	26	26	26	26	26	24	26	26	22	26	25	20	25	23	18	23	21	16	20	18	14	17	15	12	14	13	10	13	11	9	11	10	12	10	9	11
	D	0-7	Interior	20	20	20	20	20	20	20	20	20	20	20	20	20	20	20	20	20	18	20	20	16	20	20	14	20	17	12	20	14	10	17	13	9	15	11	12	13	10	10
			Exposed	20	20	20	20	20	17	20	20	16	20	20	14	20	18	13	20	16	12	20	15	11	17	13	9	15	11	12	13	9	10	11	12	9	10	11	~~8~~	9	10	~~7~~
		7-20	Interior	20	20	20	20	20	20	20	20	20	20	20	19	20	20	17	20	20	16	20	19	14	20	16	12	19	14	10	17	12	9	15	11	12	13	9	10	11	13	9
			Exposed	20	20	17	20	20	15	20	19	14	20	17	12	20	15	11	19	14	10	17	13	9	15	11	12	13	9	10	11	12	9	9	10	~~8~~	8	9	~~7~~	11	~~8~~	~~6~~
		20-27	Interior	24	24	24	24	24	24	24	24	24	24	24	23	24	24	21	24	23	19	24	21	17	23	18	15	22	15	13	21	13	11	20	11	9	17	10	8	15	9	11
			Exposed	24	24	21	24	23	19	24	20	17	24	18	15	24	16	14	24	15	12	24	14	11	20	12	9	17	10	12	15	8	11	13	11	9	11	10	~~8~~	10	9	~~7~~
		27-45	Interior	28	28	28	28	28	28	28	28	28	28	28	28	27	27	25	26	26	23	25	25	21	24	22	18	21	19	15	18	17	13	16	14	11	14	13	10	13	11	9
			Exposed	28	28	25	28	28	22	28	25	20	26	23	18	23	21	16	21	19	15	19	17	14	16	15	11	14	12	10	12	11	8	10	9	11	9	13	10	12	11	9
70	B	0-7	Interior	15	15	15	15	15	15	15	15	15	15	15	15	15	15	15	15	15	15	15	15	15	15	15	15	15	15	15	15	15	15	15	15	15	15	15	14	15	15	12
			Exposed	15	15	15	15	15	15	15	15	15	15	15	15	15	15	15	15	15	15	15	15	15	15	15	15	15	15	13	15	15	12	15	14	10	15	13	9	15	11	12
		7-20	Interior	16	16	16	16	16	16	16	16	16	16	16	16	16	16	16	16	16	16	16	16	16	16	16	16	16	16	16	16	16	16	16	16	14	16	16	12	16	14	11
			Exposed	16	16	16	16	16	16	16	16	16	16	16	16	16	16	16	16	16	16	16	16	16	16	16	14	16	16	12	16	14	10	16	12	9	15	11	12	13	9	10
		20-27	Interior	19	19	19	19	19	19	19	19	19	19	19	19	19	19	19	19	19	19	19	19	19	19	19	19	19	19	19	19	19	19	19	19	16	19	18	14	19	16	13
			Exposed	19	19	19	19	19	19	19	19	19	19	19	19	19	19	19	19	19	19	19	19	19	19	19	17	19	17	14	19	15	12	19	13	11	19	11	9	17	10	8
		27-45	Interior	24	24	24	24	24	24	24	24	24	24	24	24	24	24	24	24	24	24	24	24	24	24	24	24	23	23	23	22	22	22	21	21	20	20	20	17	19	19	15
			Exposed	24	24	24	24	24	24	24	24	24	24	24	24	24	24	24	24	24	24	24	24	24	24	24	20	23	22	17	21	19	15	18	16	13	16	14	11	14	13	10
	C	0-7	Interior	15	15	15	15	15	15	15	15	15	15	15	15	15	15	15	15	15	15	15	15	15	15	15	15	15	15	14	15	15	12	15	15	11	15	13	9	15	12	13
			Exposed	15	15	15	15	15	15	15	15	15	15	15	15	15	15	15	15	15	14	15	15	13	15	15	11	15	13	9	15	11	12	14	10	11	12	13	9	11	12	~~8~~
		7-20	Interior	16	16	16	16	16	16	16	16	16	16	16	16	16	16	16	16	16	16	16	16	16	16	16	15	16	16	12	16	15	11	16	13	9	15	11	13	14	10	11
			Exposed	16	16	16	16	16	16	16	16	16	16	16	15	16	16	13	16	16	12	16	15	11	16	13	9	15	11	12	13	9	11	11	13	9	10	11	~~8~~	9	10	~~7~~
		20-27	Interior	19	19	19	19	19	19	19	19	19	19	19	19	19	19	19	19	19	19	19	19	19	19	19	18	19	18	15	19	16	13	18	14	11	18	12	10	17	11	9
			Exposed	19	19	19	19	19	19	19	19	19	19	19	18	19	19	16	19	18	15	19	16	14	19	14	11	19	12	10	18	10	8	15	9	11	14	12	10	12	11	9
		27-45	Interior	24	24	24	24	24	24	24	24	24	24	24	24	24	24	24	23	23	23	23	23	23	22	22	21	21	21	18	20	20	16	19	17	14	17	15	12	15	13	11
			Exposed	24	24	24	24	24	24	24	24	24	24	24	22	24	24	20	23	23	18	23	21	16	20	18	14	17	15	12	14	13	10	13	11	9	11	10	12	10	9	11
	D	0-7	Interior	17	17	17	17	17	17	17	17	17	17	17	17	17	17	17	17	17	17	17	17	16	17	17	14	17	17	12	17	14	10	17	13	9	15	11	12	13	10	10
			Exposed	17	17	17	17	17	17	17	17	16	17	17	14	17	17	13	17	16	12	17	15	11	17	13	9	15	11	12	13	9	10	11	12	9	10	11	~~8~~	9	10	~~7~~
		7-20	Interior	17	17	17	17	17	17	17	17	17	17	17	17	17	17	17	17	17	16	17	17	14	17	16	12	17	14	10	17	12	9	15	11	12	13	9	10	11	13	9
			Exposed	17	17	17	17	17	15	17	17	14	17	17	12	17	15	11	17	14	10	17	13	9	15	11	12	13	9	10	11	12	9	9	10	~~8~~	8	9	~~7~~	11	~~8~~	~~6~~
		20-27	Interior	21	21	21	21	21	21	21	21	21	21	21	21	21	21	21	21	21	19	21	21	17	21	18	15	20	15	13	19	13	11	19	11	9	17	10	8	15	9	11
			Exposed	21	21	21	21	21	19	21	20	17	21	18	15	21	16	14	21	15	12	21	14	11	20	12	9	17	10	12	15	8	11	13	11	9	11	10	~~8~~	10	9	~~7~~
		27-45	Interior	25	25	25	25	25	25	25	25	25	25	25	25	24	24	24	24	24	23	23	23	21	22	22	18	20	19	15	18	17	13	16	14	11	14	13	10	13	11	9
			Exposed	25	25	25	25	25	22	25	25	20	25	23	18	23	21	16	21	19	15	19	17	14	16	15	11	14	12	10	12	11	8	10	9	11	9	13	10	12	11	9
80	B	0-7	Interior	13	13	13	13	13	13	13	13	13	13	13	13	13	13	13	13	13	13	13	13	13	13	13	13	13	13	13	13	13	13	13	13	13	13	13	13	13	13	12
			Exposed	13	13	13	13	13	13	13	13	13	13	13	13	13	13	13	13	13	13	13	13	13	13	13	13	13	13	13	13	13	12	13	13	10	13	13	9	13	11	12
		7-20	Interior	14	14	14	14	14	14	14	14	14	14	14	14	14	14	14	14	14	14	14	14	14	14	14	14	14	14	14	14	14	14	14	14	14	14	14	12	14	14	11
			Exposed	14	14	14	14	14	14	14	14	14	14	14	14	14	14	14	14	14	14	14	14	14	14	14	14	14	14	12	14	14	10	14	12	9	14	11	12	13	9	10
		20-27	Interior	17	17	17	17	17	17	17	17	17	17	17	17	17	17	17	17	17	17	17	17	17	17	17	17	17	17	17	17	17	17	17	17	16	17	17	14	17	16	13
			Exposed	17	17	17	17	17	17	17	17	17	17	17	17	17	17	17	17	17	17	17	17	17	17	17	17	17	17	14	17	15	12	17	13	11	17	11	9	17	10	8
		27-45	Interior	21	21	21	21	21	21	21	21	21	21	21	21	21	21	21	21	21	21	21	21	21	21	21	21	21	21	21	20	20	20	20	20	20	19	19	17	18	18	15
			Exposed	21	21	21	21	21	21	21	21	21	21	21	21	21	21	21	21	21	21	21	21	21	21	21	20	21	21	17	20	19	15	18	16	13	16	14	11	14	13	10
	C	0-7	Interior	13	13	13	13	13	13	13	13	13	13	13	13	13	13	13	13	13	13	13	13	13	13	13	13	13	13	13	13	13	12	13	13	11	13	13	9	13	12	13
			Exposed	13	13	13	13	13	13	13	13	13	13	13	13	13	13	13	13	13	13	13	13	13	13	13	11	13	13	9	13	11	12	13	10	11	12	13	9	11	12	~~8~~
		7-20	Interior	14	14	14	14	14	14	14	14	14	14	14	14	14	14	14	14	14	14	14	14	14	14	14	14	14	14	12	14	14	11	14	13	9	14	11	13	13	10	11
			Exposed	14	14	14	14	14	14	14	14	14	14	14	14	14	14	13	14	14	12	14	14	11	14	13	9	14	11	12	13	9	11	11	13	9	10	11	~~8~~	9	10	~~7~~
		20-27	Interior	17	17	17	17	17	17	17	17	17	17	17	17	17	17	17	17	17	17	17	17	17	17	17	17	17	17	15	17	16	13	17	14	11	16	12	10	16	11	9
			Exposed	17	17	17	17	17	17	17	17	17	17	17	17	17	17	16	17	17	15	17	16	14	17	14	11	17	12	10	17	10	8	15	9	11	14	12	10	12	11	9
		27-45	Interior	21	21	21	21	21	21	21	21	21	21	21	21	21	21	21	21	21	21	21	21	21	20	20	20	19	19	18	18	18	16	17	17	14	16	15	12	15	13	11
			Exposed	21	21	21	21	21	21	21	21	21	21	21	21	21	21	20	21	21	18	21	21	16	20	18	14	17	15	12	14	13	10	13	11	9	11	10	12	10	9	11
	D	0-7	Interior	15	15	15	15	15	15	15	15	15	15	15	15	15	15	15	15	15	15	15	15	15	15	15	14	15	15	12	15	14	10	15	13	9	15	11	12	13	10	10
			Exposed	15	15	15	15	15	15	15	15	15	15	15	14	15	15	13	15	15	12	15	15	11	15	13	9	15	11	12	13	9	10	11	12	9	10	11	~~8~~	9	10	~~7~~
		7-20	Interior	15	15	15	15	15	15	15	15	15	15	15	15	15	15	15	15	15	15	15	15	14	15	15	12	15	14	10	15	12	9	15	11	12	13	9	10	11	13	9
			Exposed	15	15	15	15	15	15	15	15	14	15	15	12	15	15	11	15	14	10	15	13	9	15	11	12	13	9	10	11	12	9	9	10	~~8~~	8	9	~~7~~	11	~~8~~	~~6~~
		20-27	Interior	19	19	19	19	19	19	19	19	19	19	19	19	19	19	19	19	19	19	19	19	17	19	18	15	18	15	13	18	13	11	17	11	9	16	10	8	15	9	11
			Exposed	19	19	19	19	19	19	19	19	17	19	18	15	19	16	14	19	15	12	19	14	11	19	12	9	17	10	12	15	8	11	13	11	9	11	10	~~8~~	10	9	~~7~~
		27-45	Interior	23	23	23	23	23	23	23	23	23	23	23	23	22	22	22	22	22	22	21	21	21	20	20	18	19	19	15	18	17	13	16	14	11	14	13	10	13	11	9
			Exposed	23	23	23	23	23	22	23	23	20	23	23	18	22	21	16	21	19	15	19	17	14	16	15	11	14	12	10	12	11	8	10	9	11	9	13	10	12	11	9

*	Cells with an astrisks indicates that the L-foot must be oriented in the Y- direction as indicated in the image.
10	Highlighted cell indicate 3-rail system span. Contact Unirac Engineering Services for support.
~~10~~	Highlighted cell with strikethrough indicate 3-rail system span and module clamp allowable capacity exceeds with 3-rails. 4-Rail system required. Contact Unirac Engineering Services for support.

UNIRAC

ASCE 7-22	II	30 ft	Ss = 3.00	23 sq.ft	LANDSCAPE	CROSS-SLOPE	NXT	NXT COMBO	Stronghold BUTYL OSB
Design Standard	Risk Category	Roof Height	Seismic	Module Area	Orientation	Rail Direction	Rail Type	Clamp	Attachment

SPAN TABLES

Maximum Allowable Rail Spans for Rooftop Solar Panels Parallel to the Roof Surface (inches)

Ground Snow Load (psf)	Wind Exposure Category	Roof Tilt Angle (deg)	Panel Exposure	Basic Wind Speed (mph)																																						
				90			95			100			105			110			115			120			130			140			150			160			170			180		
				Roof Wind Zone																																						
				1	2	3	1	2	3	1	2	3	1	2	3	1	2	3	1	2	3	1	2	3	1	2	3	1	2	3	1	2	3	1	2	3	1	2	3	1	2	3
90	B	0-7	Interior	12	12	12	12	12	12	12	12	12	12	12	12	12	12	12	12	12	12	12	12	12	12	12	12	12	12	12	12	12	12	12	12	12	12	12	12	12	12	12
			Exposed	12	12	12	12	12	12	12	12	12	12	12	12	12	12	12	12	12	12	12	12	12	12	12	12	12	12	12	12	12	12	12	12	10	12	12	9	12	11	12
		7-20	Interior	12	12	12	12	12	12	12	12	12	12	12	12	12	12	12	12	12	12	12	12	12	12	12	12	12	12	12	12	12	12	12	12	12	12	12	12	12	12	11
			Exposed	12	12	12	12	12	12	12	12	12	12	12	12	12	12	12	12	12	12	12	12	12	12	12	12	12	12	12	12	12	10	12	12	9	12	11	12	12	9	10
		20-27	Interior	15	15	15	15	15	15	15	15	15	15	15	15	15	15	15	15	15	15	15	15	15	15	15	15	15	15	15	15	15	15	15	15	15	15	15	14	15	15	13
			Exposed	15	15	15	15	15	15	15	15	15	15	15	15	15	15	15	15	15	15	15	15	15	15	15	15	15	15	14	15	15	12	15	13	11	15	11	9	15	10	8
		27-45	Interior	19	19	19	19	19	19	19	19	19	19	19	19	19	19	19	19	19	19	19	19	19	19	19	19	19	19	19	19	19	19	18	18	18	17	17	17	17	17	15
			Exposed	19	19	19	19	19	19	19	19	19	19	19	19	19	19	19	19	19	19	19	19	19	19	19	19	19	19	17	19	19	15	18	16	13	16	14	11	14	13	10
	C	0-7	Interior	12	12	12	12	12	12	12	12	12	12	12	12	12	12	12	12	12	12	12	12	12	12	12	12	12	12	12	12	12	12	12	12	11	12	12	9	12	12	13
			Exposed	12	12	12	12	12	12	12	12	12	12	12	12	12	12	12	12	12	12	12	12	12	12	12	12	12	12	9	12	11	12	12	10	11	12	13	9	11	12	8
		7-20	Interior	12	12	12	12	12	12	12	12	12	12	12	12	12	12	12	12	12	12	12	12	12	12	12	12	12	12	12	12	12	11	12	12	9	12	11	13	12	10	11
			Exposed	12	12	12	12	12	12	12	12	12	12	12	12	12	12	12	12	12	12	12	12	11	12	12	9	12	11	12	12	9	11	11	13	9	10	11	8	9	10	7
		20-27	Interior	15	15	15	15	15	15	15	15	15	15	15	15	15	15	15	15	15	15	15	15	15	15	15	15	15	15	15	15	15	13	15	14	11	15	12	9	14	11	9
			Exposed	15	15	15	15	15	15	15	15	15	15	15	15	15	15	15	15	15	15	15	15	14	15	14	11	15	12	10	15	10	8	15	9	11	14	12	10	12	11	9
		27-45	Interior	19	19	19	19	19	19	19	19	19	19	19	19	19	19	19	19	19	19	19	19	19	18	18	18	18	18	18	17	17	16	16	16	14	15	15	12	15	13	11
			Exposed	19	19	19	19	19	19	19	19	19	19	19	19	19	19	19	19	19	18	19	19	16	18	18	14	17	15	12	14	13	10	13	11	9	11	10	12	10	9	11
	D	0-7	Interior	13	13	13	13	13	13	13	13	13	13	13	13	13	13	13	13	13	13	13	13	13	13	13	13	13	13	12	13	13	10	13	13	9	13	11	12	13	10	10
			Exposed	13	13	13	13	13	13	13	13	13	13	13	13	13	13	13	13	13	12	13	13	11	13	13	9	13	11	12	13	9	10	11	12	9	10	11	8	9	10	7
		7-20	Interior	14	14	14	14	14	14	14	14	14	14	14	14	14	14	14	14	14	14	14	14	14	14	14	12	14	14	10	14	12	9	14	11	12	13	9	10	11	13	9
			Exposed	14	14	14	14	14	14	14	14	14	14	14	12	14	14	11	14	14	10	14	13	9	14	11	12	13	9	10	11	12	9	9	10	8	8	9	7	11	8	6
		20-27	Interior	17	17	17	17	17	17	17	17	17	17	17	17	17	17	17	17	17	17	17	17	17	17	17	15	17	15	13	16	13	11	16	11	9	15	10	8	15	9	11
			Exposed	17	17	17	17	17	17	17	17	17	17	17	15	17	16	14	17	15	12	17	14	11	17	12	9	17	10	12	15	8	11	13	11	9	11	10	8	10	9	7
		27-45	Interior	21	21	21	21	21	21	21	21	21	21	21	21	21	21	21	20	20	20	20	20	20	19	19	18	18	18	15	17	17	13	16	14	11	14	13	10	13	11	9
			Exposed	21	21	21	21	21	21	21	21	20	21	21	18	21	21	16	20	19	15	19	17	14	16	15	11	14	12	10	12	11	8	10	9	11	9	13	10	12	11	9
100	B	0-7	Interior	11	11	11	11	11	11	11	11	11	11	11	11	11	11	11	11	11	11	11	11	11	11	11	11	11	11	11	11	11	11	11	11	11	11	11	11	11	11	11
			Exposed	11	11	11	11	11	11	11	11	11	11	11	11	11	11	11	11	11	11	11	11	11	11	11	11	11	11	11	11	11	11	11	11	10	11	11	9	11	11	12
		7-20	Interior	11	11	11	11	11	11	11	11	11	11	11	11	11	11	11	11	11	11	11	11	11	11	11	11	11	11	11	11	11	11	11	11	11	11	11	11	11	11	11
			Exposed	11	11	11	11	11	11	11	11	11	11	11	11	11	11	11	11	11	11	11	11	11	11	11	11	11	11	11	11	11	10	11	11	9	11	11	12	11	9	10
		20-27	Interior	14	14	14	14	14	14	14	14	14	14	14	14	14	14	14	14	14	14	14	14	14	14	14	14	14	14	14	14	14	14	14	14	14	14	14	14	14	14	13
			Exposed	14	14	14	14	14	14	14	14	14	14	14	14	14	14	14	14	14	14	14	14	14	14	14	14	14	14	14	14	14	12	14	13	11	14	11	9	14	10	8
		27-45	Interior	17	17	17	17	17	17	17	17	17	17	17	17	17	17	17	17	17	17	17	17	17	17	17	17	17	17	17	17	17	17	17	17	17	16	16	16	16	16	15
			Exposed	17	17	17	17	17	17	17	17	17	17	17	17	17	17	17	17	17	17	17	17	17	17	17	17	17	17	17	17	17	15	17	16	13	16	14	11	14	13	10
	C	0-7	Interior	11	11	11	11	11	11	11	11	11	11	11	11	11	11	11	11	11	11	11	11	11	11	11	11	11	11	11	11	11	11	11	11	11	11	11	9	11	11	13
			Exposed	11	11	11	11	11	11	11	11	11	11	11	11	11	11	11	11	11	11	11	11	11	11	11	9	11	11	12	11	11	12	11	10	11	11	13	9	11	12	8
		7-20	Interior	11	11	11	11	11	11	11	11	11	11	11	11	11	11	11	11	11	11	11	11	11	11	11	11	11	11	11	11	11	11	11	11	9	11	11	13	11	10	11
			Exposed	11	11	11	11	11	11	11	11	11	11	11	11	11	11	11	11	11	11	11	11	11	11	11	9	11	11	12	11	9	11	11	13	9	10	11	8	9	10	7
		20-27	Interior	14	14	14	14	14	14	14	14	14	14	14	14	14	14	14	14	14	14	14	14	14	14	14	14	14	14	14	14	14	13	14	14	11	14	12	10	13	11	9
			Exposed	14	14	14	14	14	14	14	14	14	14	14	14	14	14	14	14	14	14	14	14	14	14	14	11	14	12	10	14	10	8	14	9	11	14	12	10	12	11	9
		27-45	Interior	17	17	17	17	17	17	17	17	17	17	17	17	17	17	17	17	17	17	17	17	17	17	17	17	16	16	16	16	16	16	15	15	14	14	14	12	14	13	11
			Exposed	17	17	17	17	17	17	17	17	17	17	17	17	17	17	17	17	17	17	17	17	16	17	17	14	16	15	12	14	13	10	13	11	9	11	10	12	10	9	11
	D	0-7	Interior	12	12	12	12	12	12	12	12	12	12	12	12	12	12	12	12	12	12	12	12	12	12	12	12	12	12	12	12	12	10	12	12	9	12	11	12	12	10	10
			Exposed	12	12	12	12	12	12	12	12	12	12	12	12	12	12	12	12	12	12	12	12	11	12	12	9	12	11	12	12	9	10	11	12	9	10	11	8	9	10	7
		7-20	Interior	12	12	12	12	12	12	12	12	12	12	12	12	12	12	12	12	12	12	12	12	12	12	12	12	12	12	10	12	12	9	12	11	12	12	9	10	11	13	9
			Exposed	12	12	12	12	12	12	12	12	12	12	12	12	12	12	11	12	12	10	12	12	9	12	11	12	12	9	10	11	12	9	9	10	8	8	9	7	11	8	6
		20-27	Interior	15	15	15	15	15	15	15	15	15	15	15	15	15	15	15	15	15	15	15	15	15	15	15	15	15	15	13	15	13	11	15	11	9	14	10	8	14	9	11
			Exposed	15	15	15	15	15	15	15	15	15	15	15	15	15	15	14	15	15	12	15	14	11	15	12	9	15	10	12	15	8	11	13	11	9	11	10	8	10	9	7
		27-45	Interior	19	19	19	19	19	19	19	19	19	19	19	19	19	19	19	19	19	19	18	18	18	17	17	17	17	17	15	16	16	13	15	14	11	14	13	10	13	11	9
			Exposed	19	19	19	19	19	19	19	19	19	19	19	18	19	19	16	19	19	15	18	17	14	16	15	11	14	12	10	12	11	8	10	9	11	9	13	10	12	11	9

*	Cells with an astrisks indicates that the L-foot must be oriented in the Y- direction as indicated in the image.
10	Highlighted cell indicate 3-rail system span. Contact Unirac Engineering Services for support.
~~10~~	Highlighted cell with strikethrough indicate 3-rail system span and module clamp allowable capacity exceeds with 3-rails. 4-Rail system required. Contact Unirac Engineering Services for support.