SFM SUN FRAME MICRORAIL™

INSTALLATION MANUAL



UNIRAC Code-Compliant Installation Manual

© 2022 by Unirac, Inc. All rights reserved.

UNIRAC welcomes input concerning the accuracy and user-friendliness of this publication. Please write to publications@unirac.com.

PUB2026OCT13

SFM SUN FRAME MICRORAIL™

INSTALLATION MANUAL

TABLE OF CONTENTS

TOOLS & SPECIFICATIONS 1
SYSTEM COMPONENTS 2-5
SYSTEM LAYOUT 6
THERMAL EXPANSION LIMITS 7
FLASHKIT MOUNTING 8
FLASHLOC MOUNTING 9
SFM DTD BUTYL ATTACHMENT MOUNTING 10-12
1ST ROW INSTALLATION 13
TRIMRAIL & MICRORAIL INSTALLATION 14
MODULE MOUNTING 15-16
FLOATING TRIM INSTALLATION 17
MICROINVERTER & WIRE MGMT. 18-19
FINISHING TOUCHES 20-21
SYSTEM BONDING & GROUNDING 22
MODULE MAINTENANCE 23-25
UL CODE COMPLIANCE NOTES 26-27
COMPATIBLE MODULES 28-31



TECHNICAL SPECIFICATIONS:

Material Types
All extruded components:
6005A-T61 or 6061-T6 Aluminum

Hardware: Stainless Steel

Bonding and Grounding: Integrated in Microrail™ (Trimrail™ and row to row bonding require additional components)

TOOLS REQUIRED OR RECOMMENDED FOR LAYOUT, FLASHINGS & ROOF ATTACHMENTS:

- Hammer
- Marker / crayon
- Measuring tape
- Drill
- Pilot drill bit
- Pry bar
- String line

TOOLS FOR MODULE INSTALL:

- Drill and socket adapter or socket wrench
- 1/4" hex driver
- Torque wrench
- 1/2" socket (optional)

SAFETY:
All applicable OSHA safety guidelines should be observed when working on a PV installation job site. The installation and handling of PV solar modules, electrical installation and PV racking systems involves handling components with potentially sharp metal edges. Rules regarding the use of gloves and other personal protective equipment should be observed.

TORQUE SPECIFICATIONS:	
All SFM Hardware	20 ft-lbs (unless otherwise noted)
Grounding lugs	See page 22

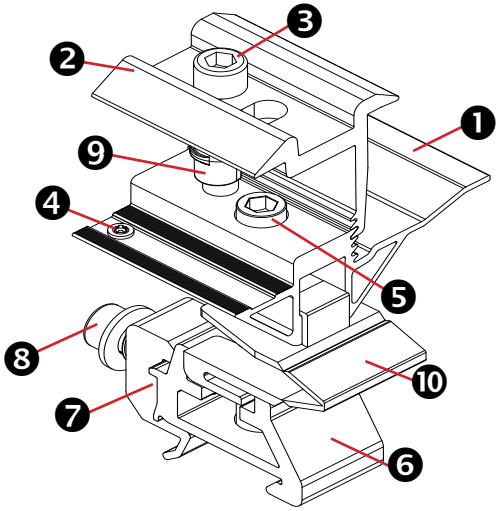

SUNFRAME Microrail™ - 2"
(Part Number - 250020U/ 253020U(30 mm))

Sub-Components:
1. Base
2. Cap
3. Clamp Socket Head Cap Screw
4. Bonding Pin
5. Height Adjustment Feature
6. Tower
7. Dovetail Lock
8. Dovetail Socket Head Cap Screw
9. Spring Clip
10. Anti-rotation Clip

Functions:
- 1 or 2 module support to roof attachment
- Single Use Only

Features:
- Arrives on-site pre-assembled and ready for installation
- Cap indicates module height compatibility
  - Supports discrete module thicknesses from 30mm* to 40mm
- Receiving feature that allows simple module placement, tightening of fasteners and eliminates working over modules.

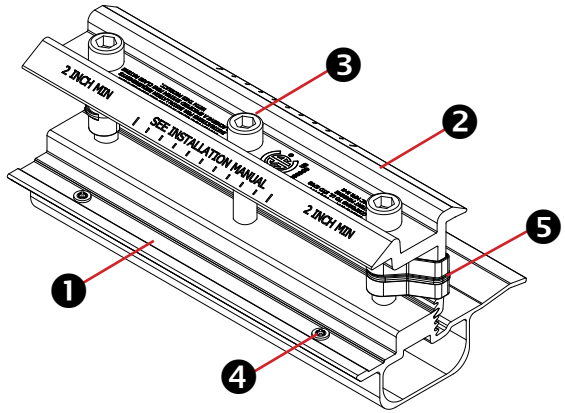

SUNFRAME Microrail™ 6.5" Splice
(Part Number - 250010U/ 253010U (30 mm))

Sub-Components:
1. Base
2. Cap
3. (3) Clamping Socket Head Cap Screws
4. Bonding Pins
5. (2) Spring Clips

Functions:
- 2,3 or 4 module support & connection
- E-W module to module bonding
- Single Use Only

Features:
- Arrives on-site pre-assembled and ready for installation
- Cap indicates module height compatibility
  - Supports discrete module thickness from 30mm* to 40mm
- Receiving feature that allows simple module placement, tightening of fasteners and eliminates working over modules.
- Does not attach to roof

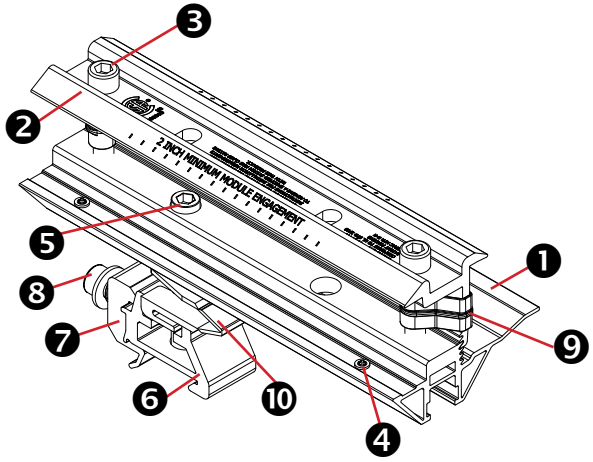

SUNFRAME Microrail™ 8" Attached Splice
(Part Number - 250030U/ 253030U (30 mm))

Sub-Components:
1. Base
2. Cap
3. (2) Clamp Socket Head Cap Screws
4. (2) Bonding Pins
5. Height Adjustment Feature
6. Tower
7. Dovetail Lock
8. Dovetail Socket Head Cap Screw
9. (2) Spring Clip
10. Anti-Rotation Clip

Functions:
- 2, 3, or 4 module support to roof attachment (when attachment is necessary at splice point)
- E-W module to module bonding
- Single Use Only

Features:
- Arrives on-site pre-assembled and ready for installation
- Cap indicates module height compatibility
  - Supports discrete module thickness from 30mm* to 40mm
- Receiving feature that allows simple module placement, tightening of fasteners and eliminates working over modules.

NOTE: 1. For 30mm modules, 30mm Microrails, Splices, and Attached splices must be used.
2. All parts with bonding features are certified for single-use only, unless noted otherwise.

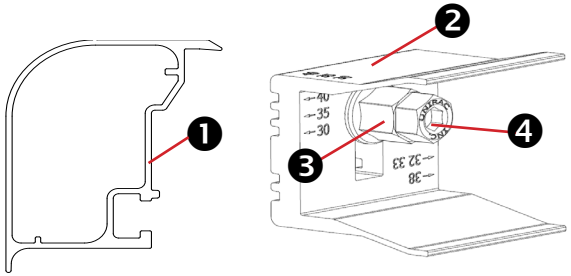

Trimrail™ (Part Number - 256072U) and Module Clips (Part Number - 250111U)

Sub-Components:
1. Trim Rail
2. Module Clip
3. T-Bolt
4. Tri-Drive Nut (Part Number - 009040S)

Trimrail™

Functions:
- Required front row structural support (with module clips)
- Module mounting
- Installation aid
- Aesthetic trim

Features:
- Mounts directly to L-feet
- Aligns and captures module leading edge
  - Supports discrete module thicknesses from 30, 32, 33, 35, 38, and 40mm

Module Clips

Functions:
- Required front row structural support (with trimrail)
- Module mounting

Features:
- Mounts to Trimrail™ with T-bolt and tri-drive nut
- Manually adjustable to fit module thicknesses 30, 32, 33, 35, 38, and 40mm.

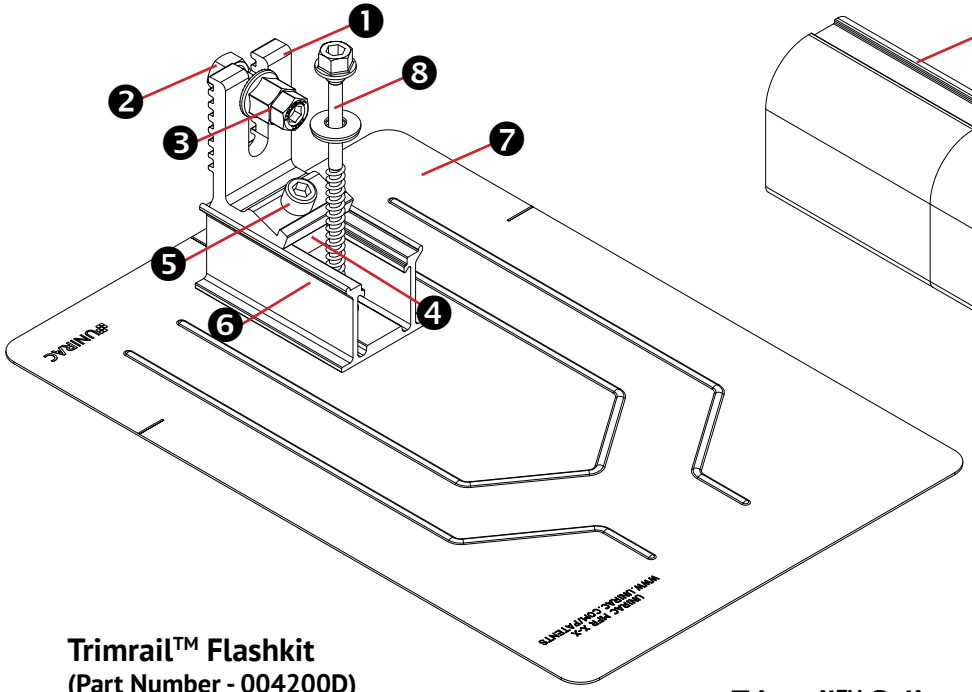

Trimrail™ Flashkit (Part Number - 004200D)

Sub-Components:
1. L-Foot
2. Hex bolt
3. Tri-drive nut
4. Channel Nut
5. Socket Head Cap Screw
6. 3"Channel/Slider w/grommet
7. Flashing
8. Structural Screw & SS EPDM Washer

Functions:
- Attach Trimrail™ to roof attachment / flashing
- Patented roof sealing technology at roof attachment point

Features:
- Slot provides vertical adjustments to level array
- Slider provides north/south adjustment along the slope of the roof
- Shed and Seal Technology

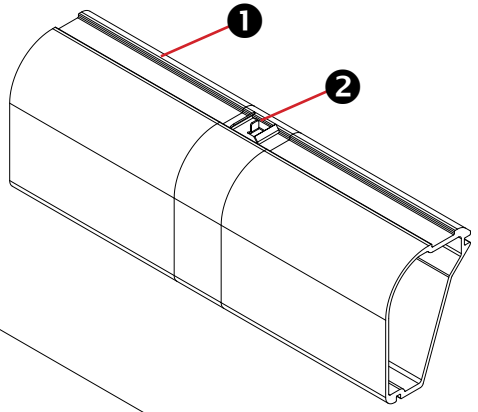

Trimrail™ Splice (Part Number - 250120U)

Sub-Components:
1. Structural Splice Extrusion
2. Bonding Clip

Functions:
- Front row structural support
- Installation aid
- Structurally connects 2 pieces of Trimrail™
- Electrically bonds 2 pieces of Trimrail™
- Single Use Only

Features:
- Aligns and connects Trimrail™ pieces
- Tool-less installation

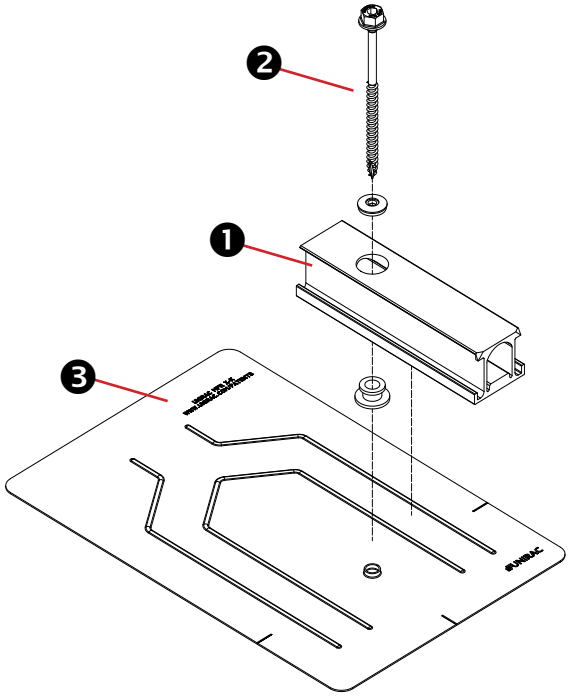

SFM Slider Flashkit
(Part Number - 004270D)

Sub-Components:
1. Slider w/grommet
2. Structural Screw & SS EPDM washer
3. Flashing

Functions:
- Patented Shed & Seal roof sealing technology at roof attachment point
- For use with compatible 2" Microrail or 8" Attached Splices

Features:
- Slider provides north/south adjustment along the slope of the roof
- Shed and Seal Technology

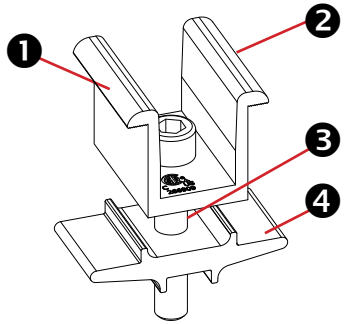

Module-to-Module N-S Bonding
(Part Number - 008000U)

Sub-Components:
1. Clamp
2. Bonding Pins (2)
3. 5/16" Socket Head Cap Screw
4. Clamp Base

Functions/ Features:
- Row to row bonding
- Single Use Only
- Fits module sizes 30-40mm

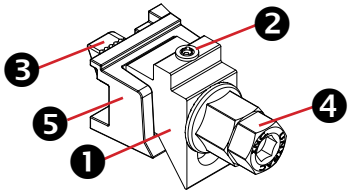

Trim -to- Module Bonding Clamp and Floating Trim Clamp (Part Number - 008100U)

Sub-Components:
1. Wedge
2. Bonding Pin
3. T-Bolt
4. Nut
5. Cast Base

Functions/ Features:
- Module to Trimrail™ bonding - single use only
- Attaches Trimrail™ to module when fewer than 2 rafter attachment points are available
- Fits module sizes 32-40mm
- Single Use Only

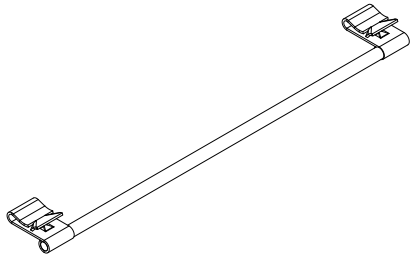

Wire Bonding Clip w/ 8AWG
(Part Number - 008015S)

Functions:
- Row to row bonding
- Module to Trimrail™ bonding
- Single Use Only

Features:
Tool-less installation

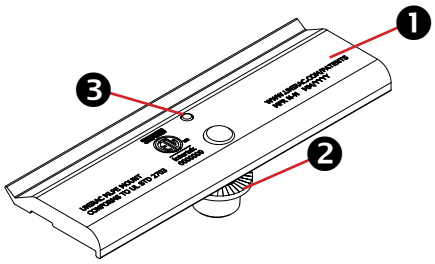

MLPE Mounting Assembly

(Part Number - 008114M)

Sub-Components:
1. MLPE Mount Base
2. 5/16 Socket Head Cap Screw
3. Bonding Pin

Functions:
- Securely mounts MLPE to module frames
- MLPE to module bonding
- Single Use Only

Features:
- Mounts easily to typical module flange
- UL2703 Recognized

MLPE = Module Level Power Electronics, e.g. microinverter or power optimizer

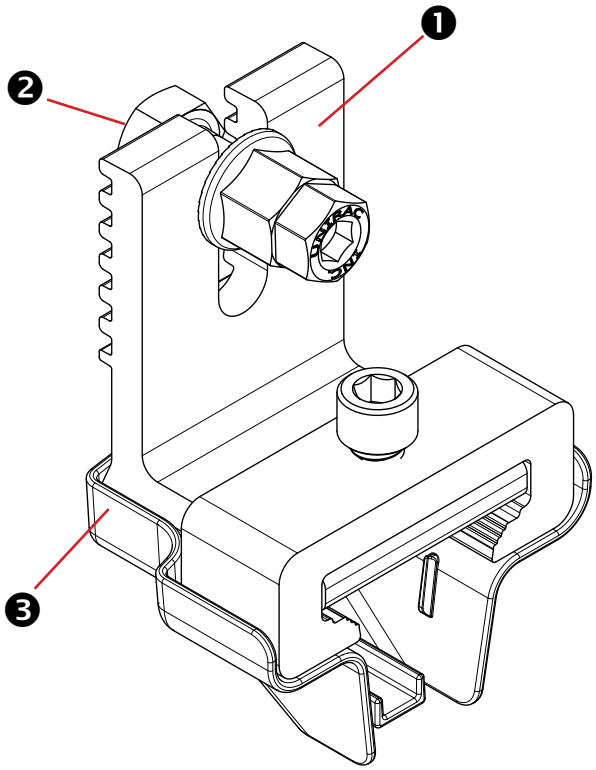

Flashloc Trim Attachments
(Part Number - 004095D)

Sub-Components:
1. Trim Assembly
2. Hardware (Hex Bolt)
3. Plastic Cap

Functions:

• Attach Trimrail™ to roof attachment

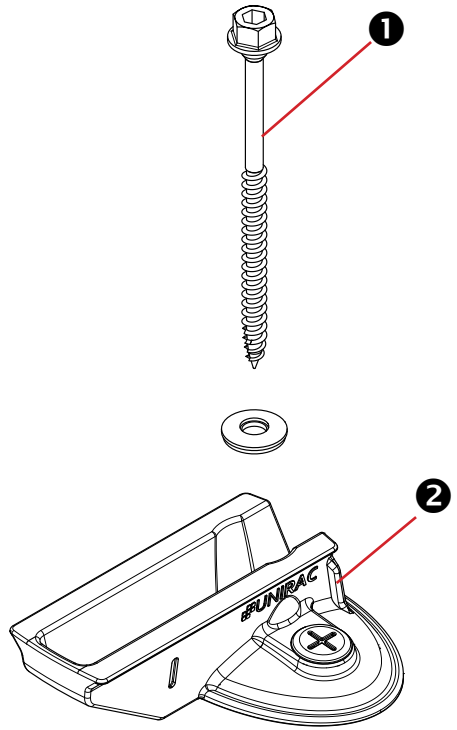

Flashloc SFM Slider
(Part Number - 004285M)

Sub-Components:
1. Structural Screw & SS EPDM washer
2. Flashloc Slider

Functions:
- Shingle comp roof attachment with Flashloc Technology
- Connect with TrimRail™ & SFM Splice

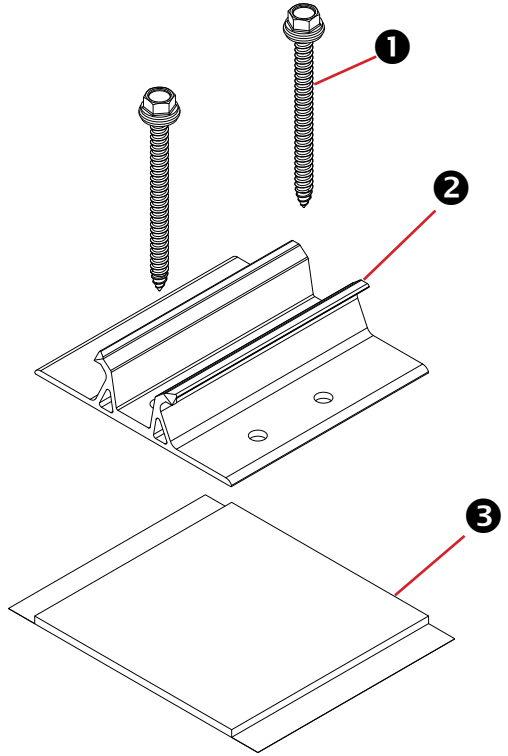

SFM DTD Butyl Attachment
(Part Number - SFMBTLM1)

Sub-Components:
1. (2) 3" Screw, HWH, SS, #14-14, TYPE AB, W/#14 EPDM washer
2. SFM DTD Attachment
3. Butyl Pad

Functions:
- Slider provides north/south adjustment along the slope of the roof
- Compatible with 2" Microrail, 8" Attached Splices, and Flashloc Trim attachment.

NOTE: Extra screws (P/N: 003251W) & Extra butyl pads (P/N: XTRABUTL-SFM) for direct-to-deck applications are sold separately.

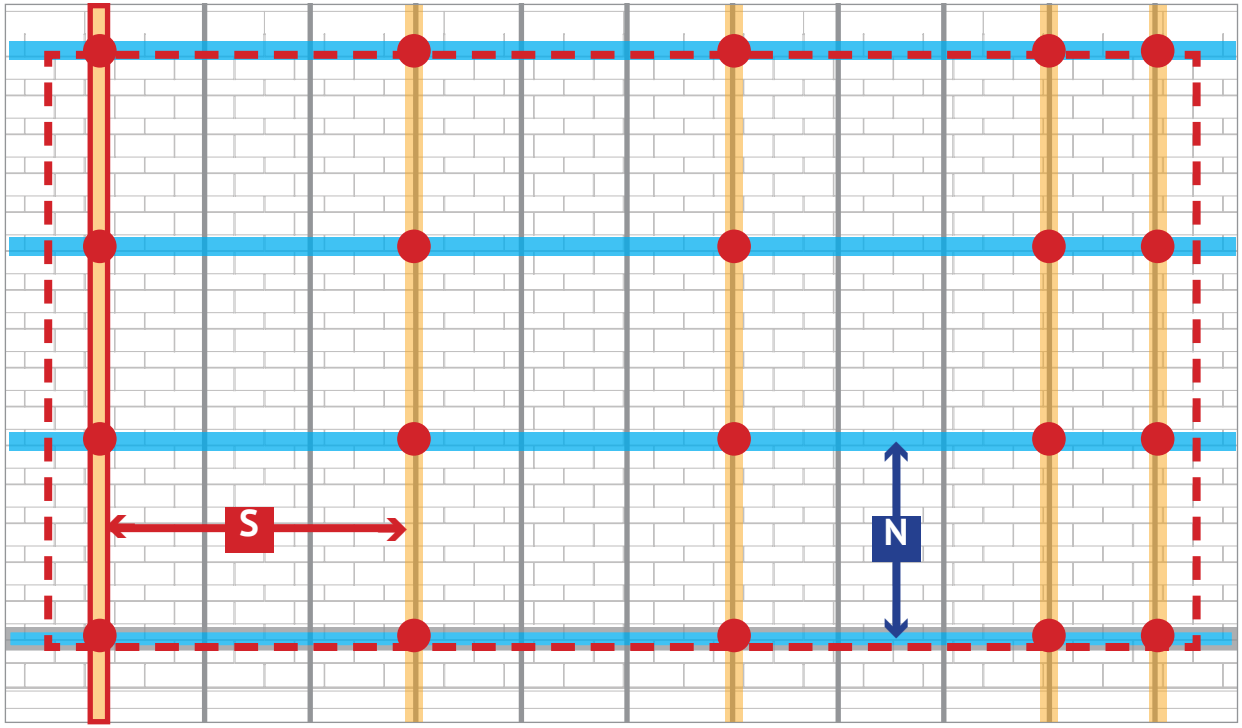

1. Determine appropriate array location on roof. **NOTE: Consult local AHJ regarding setback requirements**
2. Select starting course of shingles (or tiles)
3. Mark next row of attachments and repeat for remaining rows

N - NS distance equals module width +1"

4. Locate 1st rafter closest to array edge (and inside array footprint) and mark
5. Find next rafter for attachment based on appropriate span
   - Continue to end of array
   - Mark last rafter before end or array

S Span

6. Mark attachment points on rafters along each NS module grid line
7. Refer to Unirac SFM D&E Guide and U-Builder for allowable spans and cantilevers.

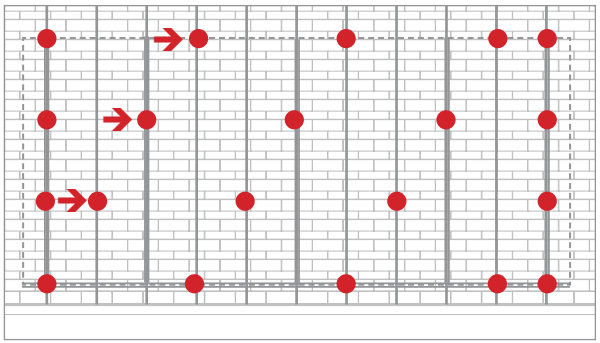

TO STAGGER ATTACHMENTS: Shift each subsequent row of attachments one rafter over.

See the Design and Engineering Guide for details on regional max spans and overhang.

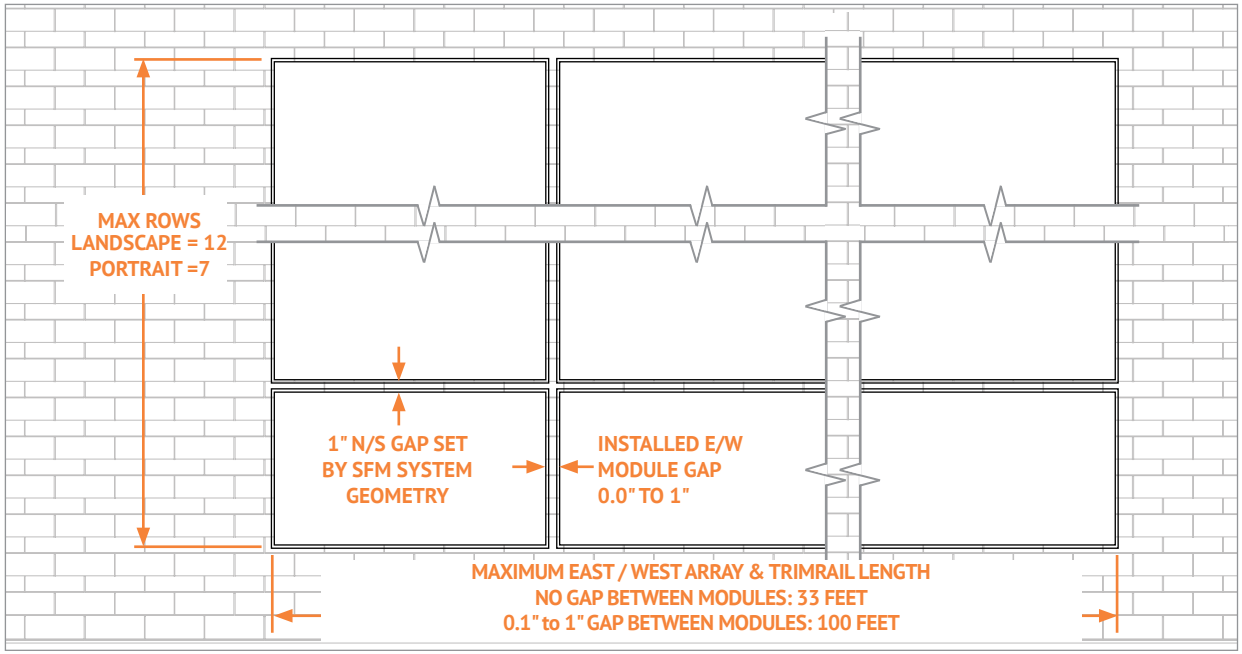

NORTH-SOUTH THERMAL EXPANSION LIMITS:

- 12 Rows of modules - Landscape orientation
- 7 Rows of modules - Portrait Orientation

EAST-WEST THERMAL EXPANSION LIMITS:

- 33ft. with no module gap (butted modules)
- 100ft. with a minimum module gap of 1/8"

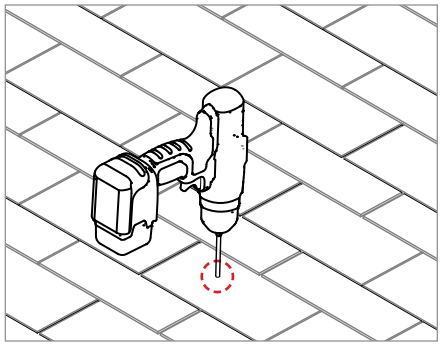

PILOT HOLES:
Drill pilot holes for lag screws or structural screws (as necessary) at marked attachment points

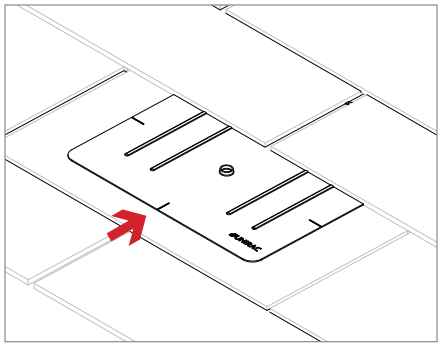

FLASHINGS:
Place flashings

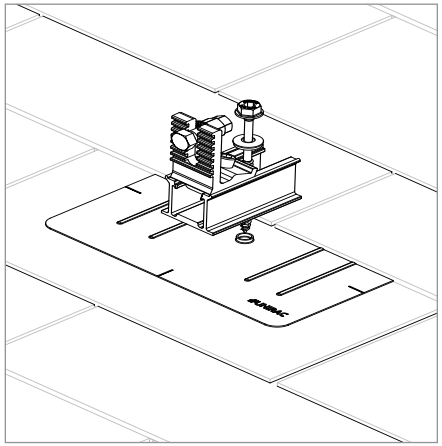

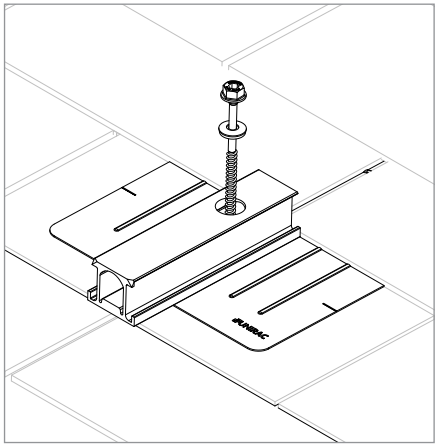

INSTALL SLIDERS AND TRIMRAIL ROOF ATTACHMENTS:

- Insert flashings per manufacturer instructions

NOTE: Use Lag screw or structural fastener with a maximum diameter of 5/16"

- Attach sliders to rafters
- Verify proper row to row spacing for module size (Mod NS + 1")
- Ensure that Trimrail™roof attachments in each row have sufficiente engagement with slider dovetails for proper attachment.

INSTALL SLIDERS AND ROOF ATTACHMENTS:
Follow manufacturer instructions for flashing installation procedures

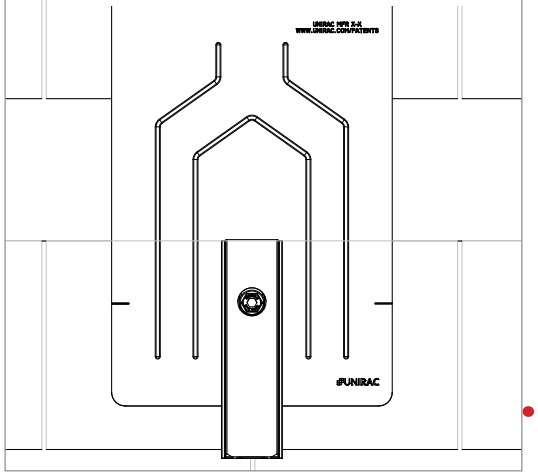

NOTE: If N-S module edge is within 1" of the shingle course above, you have the option to pivot / rotate slider at the attachment point to span the next course and cut shingles as required.

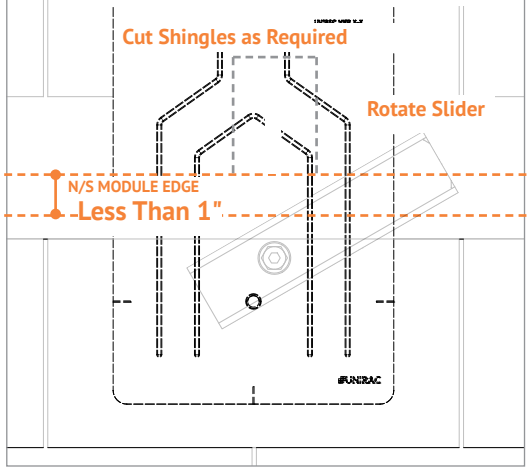

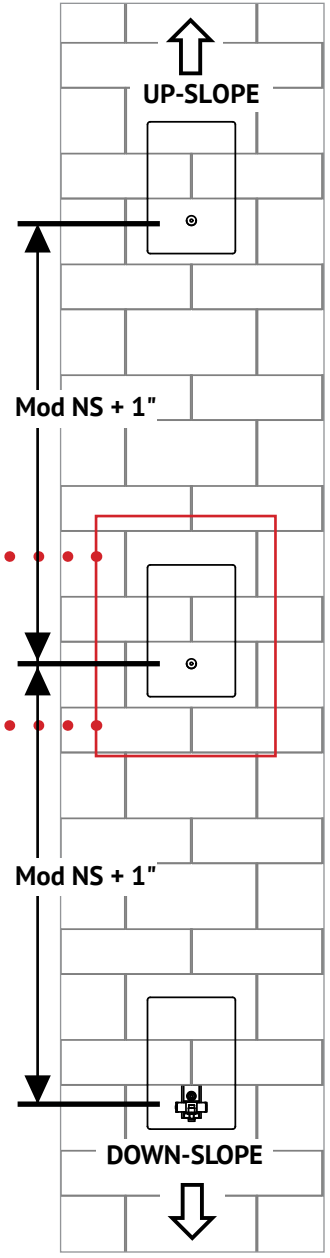

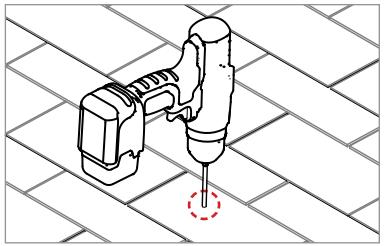

PRE-INSTALL:

Clean roof surface of dirt, debris, snow and ice. Locate rafters and mark attachment locations. Drill 7/32" pilot holes for structural screw.
Backfill all pilot holes with sealant.

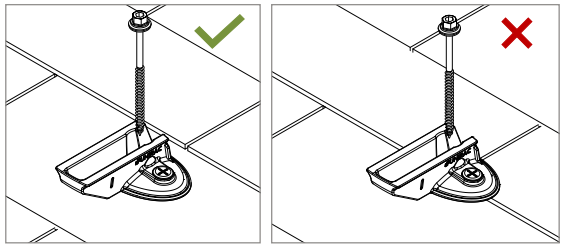

STEP 1: SECURE

Place FLASHLOC over backfilled pilot hole and drive structural screw until mount is held firmly in place. Attachment should be placed on the row below or on the row above the shingle but not between the two shingles. Height difference between N-S and E-W shingles should not be more than the 0.09 inches.

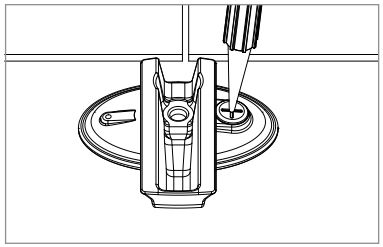

STEP 2: SEAL

Insert tip of UNIRAC approved sealant into port. Inject until sealant exits vent hole on the other side of the attachment base

Continue array installation, attaching each Flashloc Slider at the proper locations."

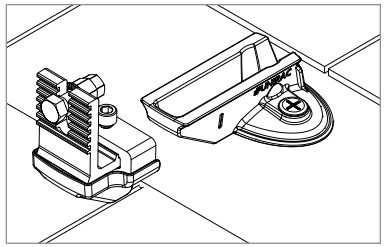

STEP 3: (only for attachment row with trim): install trim attachment

Attach the flashloc trim attachment onto flashloc slider kit and secure it to the place.
Torque socket head cap screw to 20 ft/lbs.

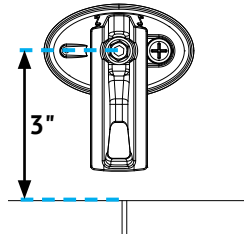

The position of the Flashloc Slider can be adjusted in the N-S direction to optimize installation.

However, the pilot hole MUST BE AT LEAST 3“ away from the bottom edge of the shingle course.

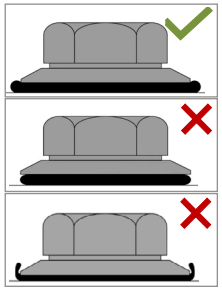

WARNING

Do not over-torque the structural screw. Only torque until the EPDM in the sealing washer expands slightly beyond the edge of the metal washer.

NOTE:
- **When FLASHLOC is installed over gap between shingle tabs or vertical joints, fill gap/joint with sealant between mount and upslope edge of shingle course.**
- **When installing included rail attachment hardware, torque nut to 20 ft/lbs.**
- **USE ONLY UNIRAC-APPROVED SEALANTS**

NOTE: If N-S module edge is within 1 " of the upper shingle coarse rotate FlashLoc Slider upslope as shown below.

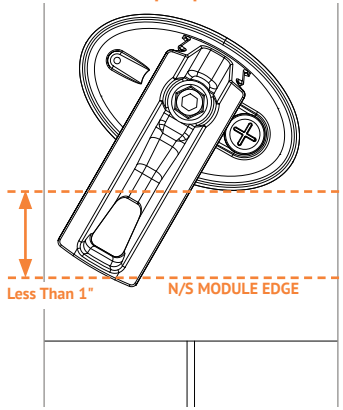

IMPORTANT:
CUT SHINGLES WHEN NECESSARY. DO NOT INSTALL THE FLASHLOC SLIDER ACROSS THICKNESS VARIATIONS GREATER THAN 1/8" SUCH AS THOSE FOUND IN HIGH DEFINITION SHINGLES.

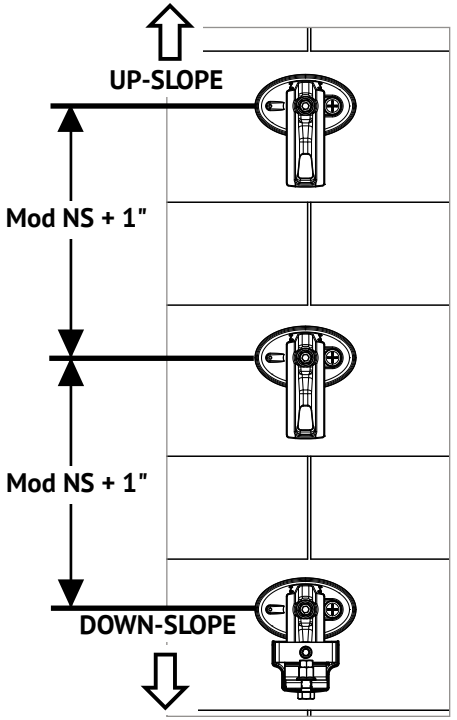

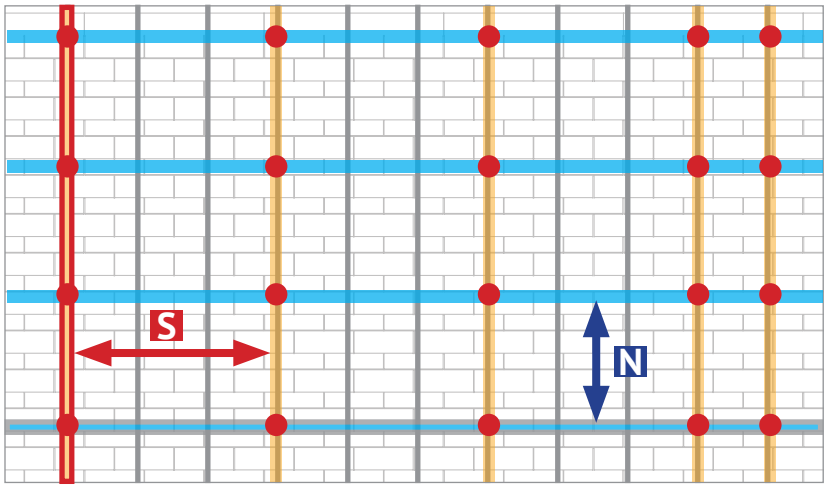

MARK ARRAY LOCATION:

Clean roof surface of dirt, debris, snow, and ice. Mark array location and determine roof attachment locations based on array layout. Snap chalk lines to mark each row of roof attachment points. Locate rafters and mark at intersection of attachment lines. Attachment spacing determined per Design and Engineering Guide or project specific U-Builder Engineering Report .

Please refer page 6 for array layout details.

⚠ WARNING

- **To maintain butyl flashing performance, Unirac does not recommend installing when ambient and/or roof temperatures are below 5°F or above 180°F.**
- **SFM DTD Butyl must be installed on a clean, dry surface to ensure flashing integrity.**

NOTE:

- **SFM DTD Butyl attachment is designed for use on Asphalt Shingle, Rolled Comp, EPDM, TPO, Polyethylene, Polypropylene, ABS, and steel/painted roofs.**
- **Pilot holes are not necessary to be drilled for self-drilling screws. But if holes are drilled to identify the rafter, they should be backfilled with sealant before installing the attachment.**
- **SFM DTD Butyl attachment is UL 2703A Certified.**

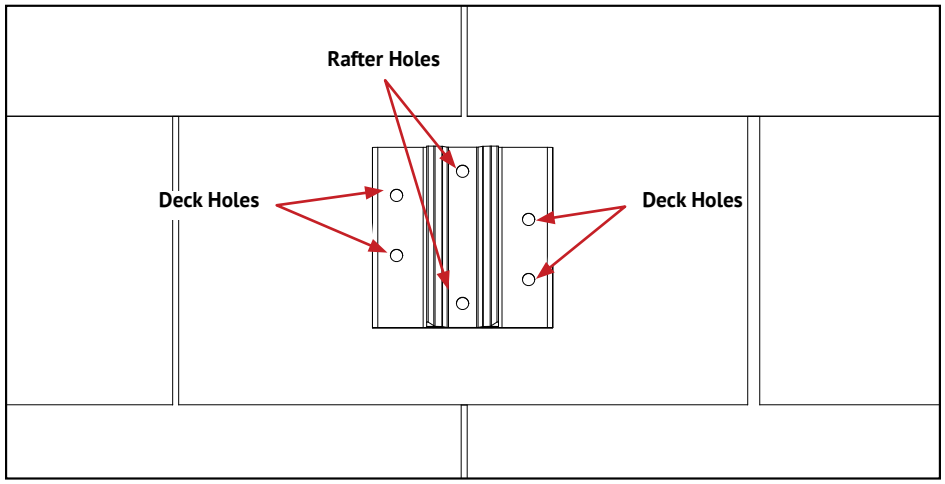

PLACING SFM DTD BUTYL ATTACHMENT :

Identify the position of the attachment to install before peeling the release paper. Ensure that the attachment lands on a flat Surface. If the surface at the location of the attachment is uneven, add butyl patches to flatten the surface.

Note:

- **Attachment should be oriented with the slope as shown with the deformed corners on the downslope side.**
- **Attachment should be installed on the rafter using rafter holes and on the deck using all six holes.**
- **See page 12 for instructions on placing extra butyl pads or contact Unirac team for further information.**

⚠ CAUTION

Do not peel the release paper from the butyl on the attachment until it is ready to install.

⚠ WARNING

Installing attachments on uneven surfaces without adding the extra butyl patches creates a high risk for water leakage due to the gap created between the adhesive and the roof.

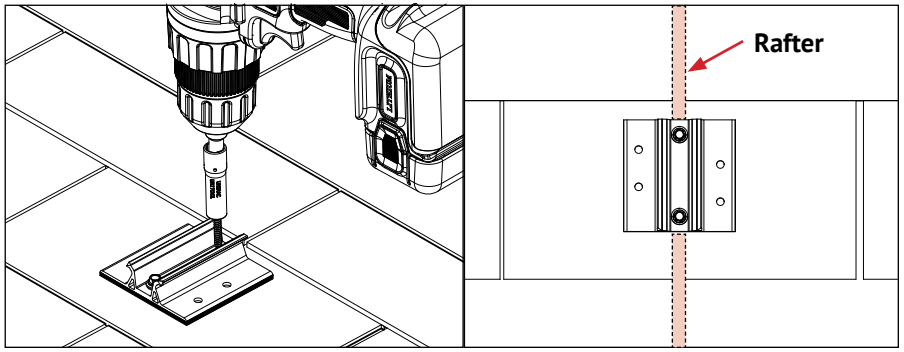

INSTALLING DTD BUTYL ATTACHMENT TO RAFTER:
Peel-off the release paper from the underside of the attachment and place attachment over marked location. Secure the attachment to the rafter with the two rafter screws provided.

Note:
Ensure to use drill extension or deep socket tool for installing rafter screws.

⚠ CAUTION

- **To determine if the screw is engaging the rafter, there should be resistance to driving the screw through the entire length. If the screws do not properly engage the rafter, install the 4 additional deck screws.**
- **It is recommended to begin installation with the screws on the upslope side of the attachment and continue installing the screws on the downslope side of the attachment for best fit.**

⚠ WARNING

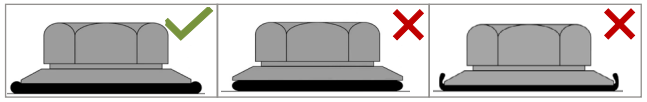

Do not over-torque the structural screw. Only torque until the EPDM in the sealing washer expands slightly beyond the edge of the metal washer as shown in figure.

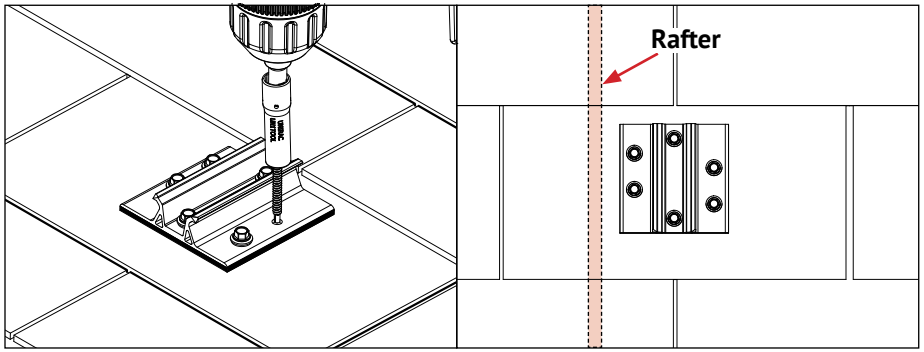

INSTALLING DTD BUTYL ATTACHMENT TO DECK:
When installing the attachment to the deck instead of the rafter (direct-to-deck), install 4 additional screws on the remaining screw holes on the attachment

Note:
- **Additional deck screws are NOT included in the KIT. Must be purchased separately.**
- **Pre-stock with additional screws in case of going direct-to-deck.**

⚠ CAUTION

- **Allowable attachment spans may change for direct-to-deck applications.**
- **Unirac recommended spans are only valid with Unirac supplied screws.**

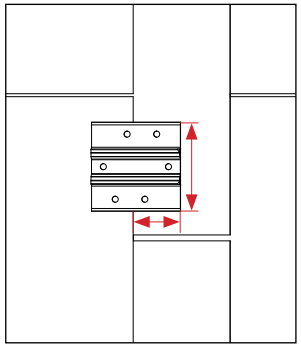
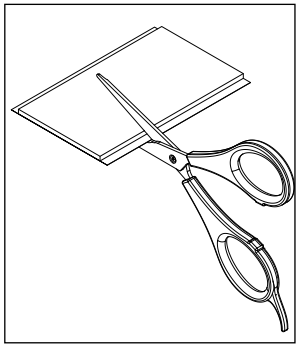
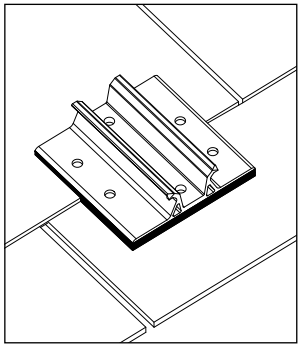
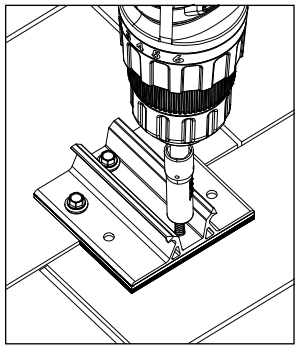
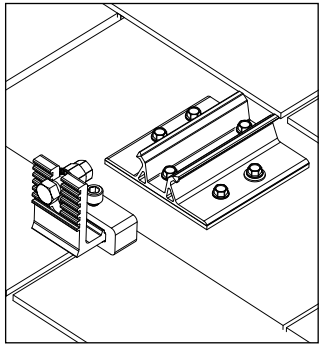
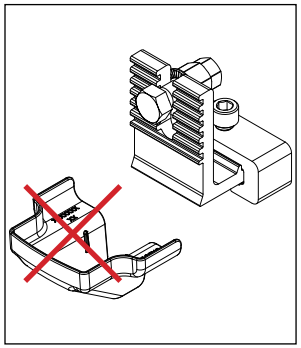

INSTALLING SFM DTD BUTYL ATTACHMENT OVER SHINGLE OVERLAP OR GAP

If the attachment falls over a shingle overlap, level the surface by following below steps:

A. Measure the attachment overhang.
B. Cut the butyl pads to required size.
C. Stack extra butyl pad layers as necessary to level the roof and place the attachment.
D. Begin installation with the screws on the upslope side of the attachment and continue to install the screws on the downslope side of the attachment.

Note:

- **Extra butyl pads are NOT included in the KIT.**
- **Pre-stock with extra butyl pads from Unirac Kits in case installation is required over overlap or gap.**

⚠ CAUTION

It is recommended to begin installation with the screws on the upslope side of the attachment and continue installing the screws on the downslope side of the attachment for best fit.

INSTALL TRIM ATTACHMENT
(only for attachment row with trim):

A. Attach the flashloc trim attachment onto the SFM DTD Butyl attachment kit and secure it to the place.
B. Torque the socket head cap screw to **20 ft/lbs.**

NOTE:
Do not use the cap for the Flashloc Trim attachment while it is mounted onto the SFM DTD Butyl attachment kit.

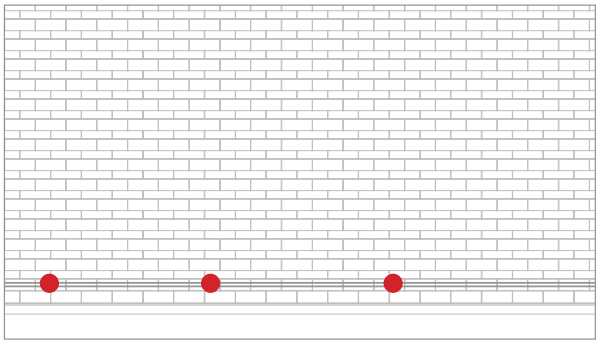

ALIGN FRONT ROW:
Align front row Trimrail™ roof attachments with string line

TIP: Pull String-line across back (smooth) edge of attachments

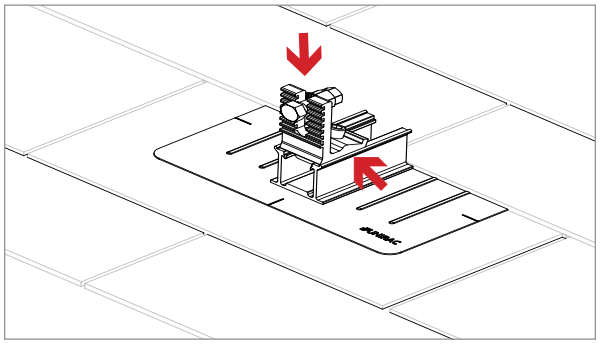

TIGHTEN SLIDER:
Tighten front row lag screw and TrimrailT™ roof attachment channel clamp socket head cap screw.

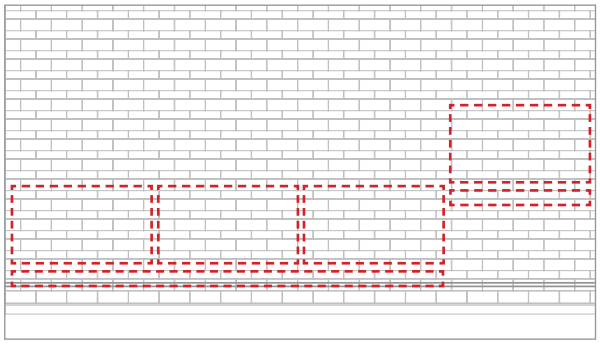

TRIMRAIL PREPARATION:
Determine overall length of Trimrail™ for front row. Determine splice locations (if any) and Trimrail™ lengths required. When 2 or less attachment points are available at front of module edge, a Floating Trim Clamp may be required, see page 17 for details.

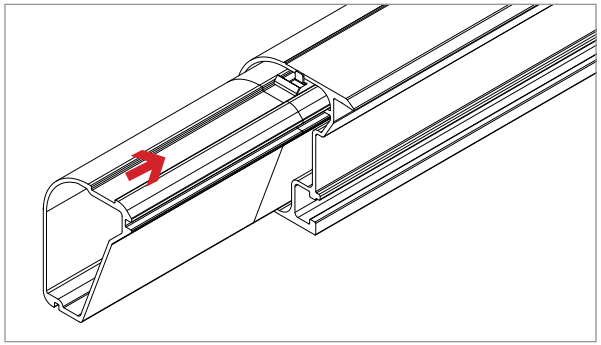

INSTALL TRIMRAIL SPLICE:
Place Trimrail™ with front side up and firmly insert splice into Trimrail™, until it contacts vertical stop tab of steel bonding clip.

NOTE: Do not over-insert splice

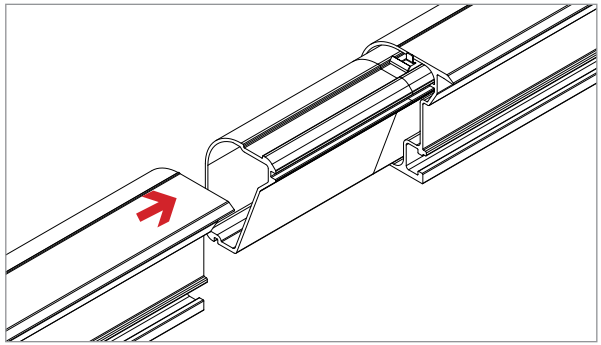

JOIN TRIMRAIL SECTIONS AT SPLICE:
While holding Trimrail™ sections in alignment, join sections together with splice centered at joint and vertical stop tab in contact with both trimrail sections.

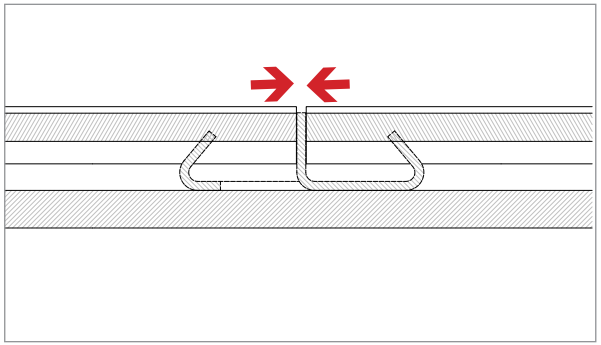

VERIFY SPLICE INSTALLATION:
Verify full engagement of splice clip at top of trim rail. Bonding between trim sections occurs through the splice.

See the Design and Engineering Guide for details on regional max spans and overhang.

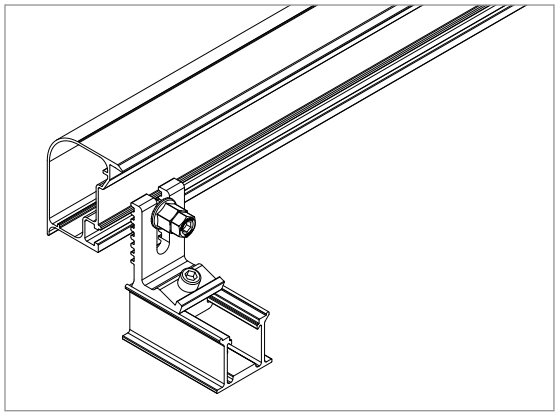

ATTACH TRIMRAIL TO ROOF ATTACHMENT:
Attach rail using 3/8" hex bolt & Tri-drive or serrated flange nuts. Make sure Trimrail™ is level across all Trimrail™ roof attachments. After rail is level, tighten channel clamp bolts to secure Trimrail™ roof attachments to channels.

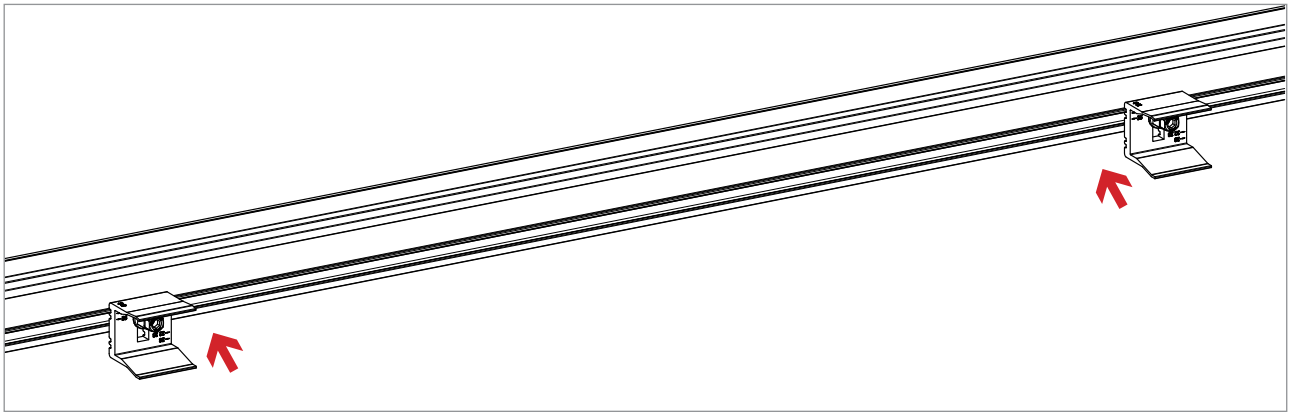

INSTALL MODULE CLIPS ON TRIMRAIL:
Attach module clips to Trimrail using 3/8" T-bolts and Tri-drive or serrated flange nuts. A minimum of two clips are required per module. Refer to SFM D&E guide and U-builder for required position and quantity of module clips.

NOTE: module clips may be pre-installed on trimrail prior to attaching trimrail to roof attachments

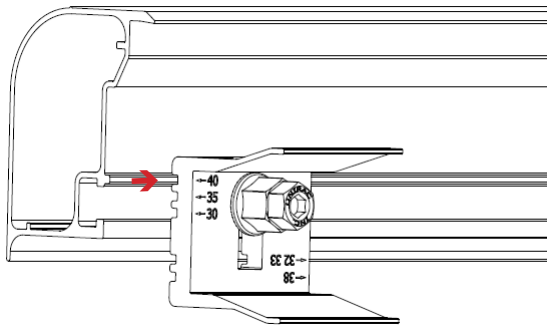

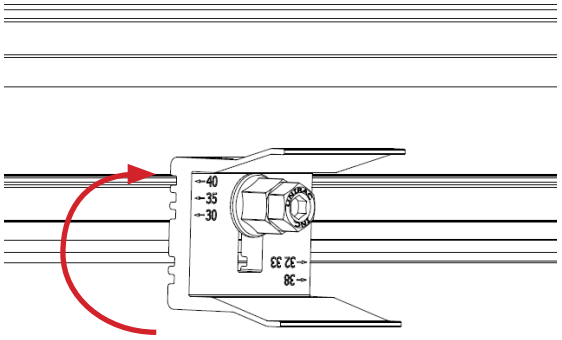

POSITION MODULE CLIPS ACCORDING TO MODULE THICKNESS:
Align notch in module clip with trimrail rib according to module thickness (identified in mm on faces of module clips). Rotate clip to position at required location.

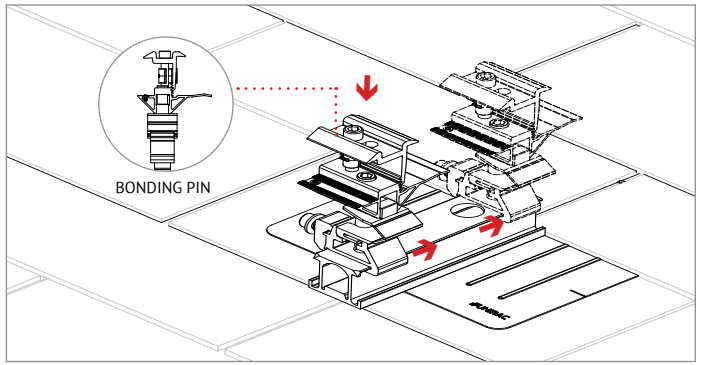

NOTE: Bonding pin on Microrails should be positioned downslope.

INSTALL MICRORAILS:
Install Microrail™ at marked attachment points. Click Microrail™ into sliders and push Microrail™ to top of slider. Ensure that cap remains in upper most (40mm) position.

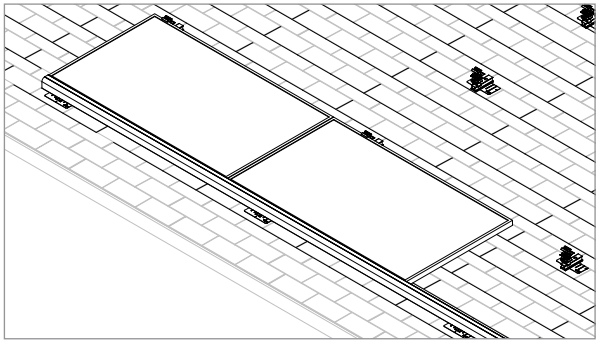

LAY IN MODULE(S):
Install first two (2) modules on bottom row. Install downhill end of module into the Trimrail™ and module clips first and then position uphill 2" microrails to support modules.

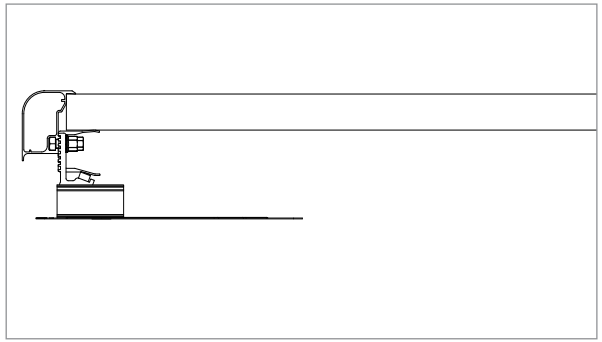

LAY IN MODULE(S):
Module should slide into catch features of the Trimrail™ and module clips.

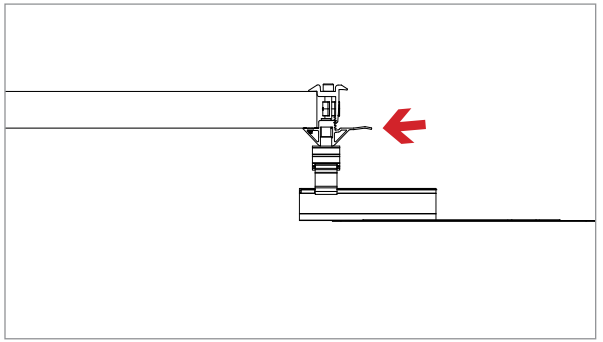

SEAT MODULE(S):
Ensure that modules are properly seated in cap and base.

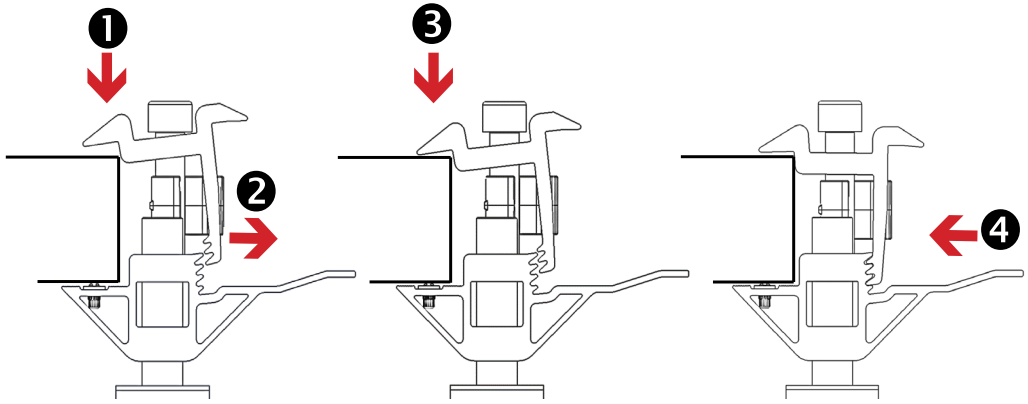

ADJUST MICRORAIL CAP DOWN TO ENGAGE WITH MODULE:
With microrail pressed against module **1.** Apply downward pressure to module side of cap which will **2.** separate cap from base on capture side and allow cap to **3.** contact module and **4.** simultaneously re-engage to base at corresponding module height location.

IMPORTANT: Microrail caps and splices must be installed with at least 2" engagement with module.

VERIFY CORRECT POSITION OF CAP:
Check position and verify cap on down-slope side is tight with no gap between cap and module after tightening bolt

NOTE: For 30mm modules, 30mm Microrails, Splices, and Attached splices must be used.

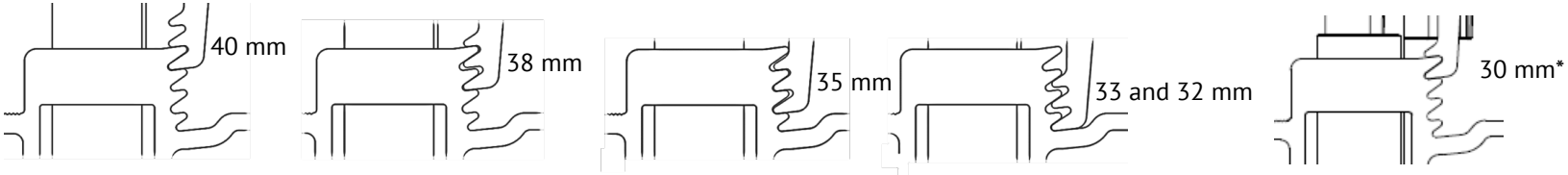

Wire management is performed after each row of modules is installed. Refer to wire management section pages 18 & 19 for detailed instructions.

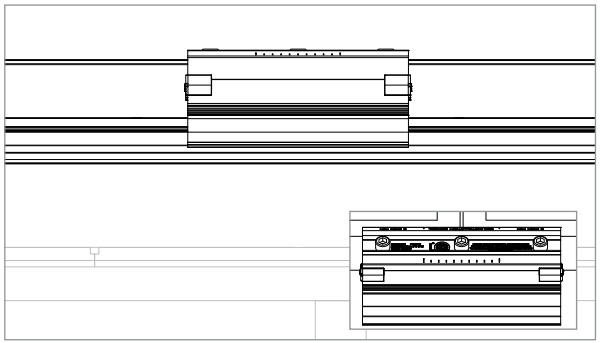

ATTACH SPLICE:
Attach splice at intersection of two (2) modules.

- Use attached splice if required per SFM D&E Guide.
- Ensure minimum module engagement using indicator marks.

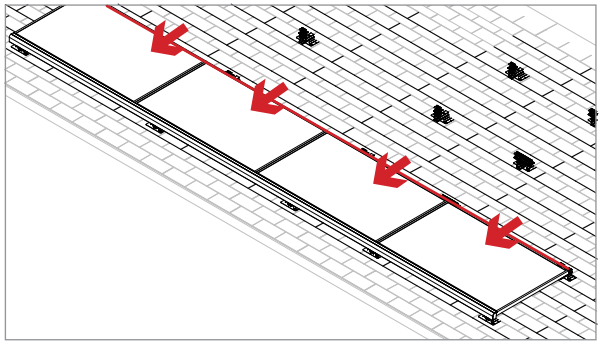

FASTEN MODULES:
Finish installing modules along row and tighten fastening bolts on microrails and splices to 20 ft. lbs after entire row is installed.

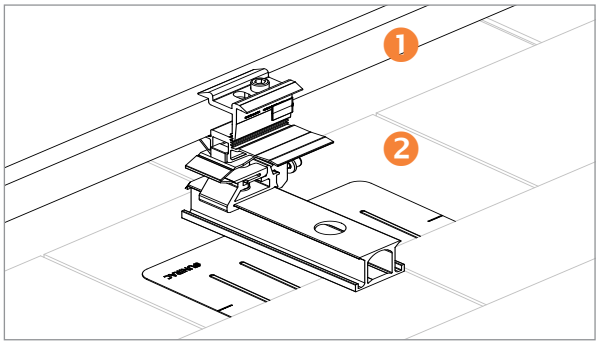

TIGHTEN FASTENERS:
Tighten fasteners to 20 ft lbs.

NOTE: Tighten components in following order:
❶ Module clamp socket head cap screw then
❷ Dovetail socket head cap screw

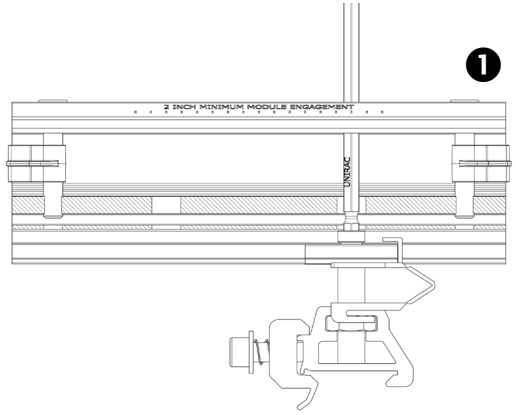

ATTACHED SPLICE ADJUSTMENT:
Tower and height adjustment feature may be located to alternate position as required to achieve minimum module engagement.

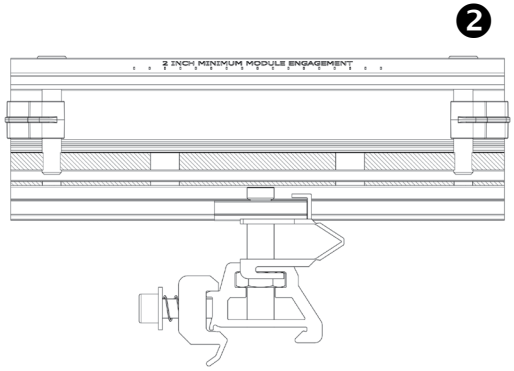

1. With 1/4" hex drive tool, rotate height adjustment feature clockwise until head clears thru-hole in base. 2. slide tower to alternate position and align. height adjustment feature head with clearance hole.

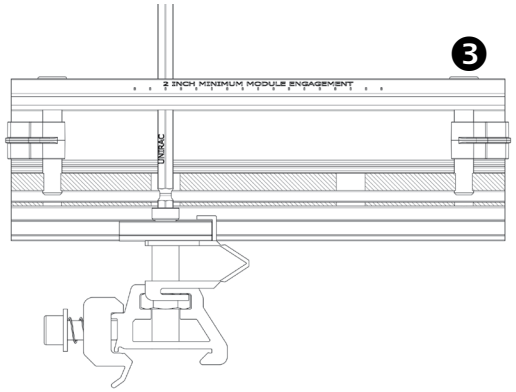

3. Rotate height adjustment feature counter-clockwise until head enters clearance hole.

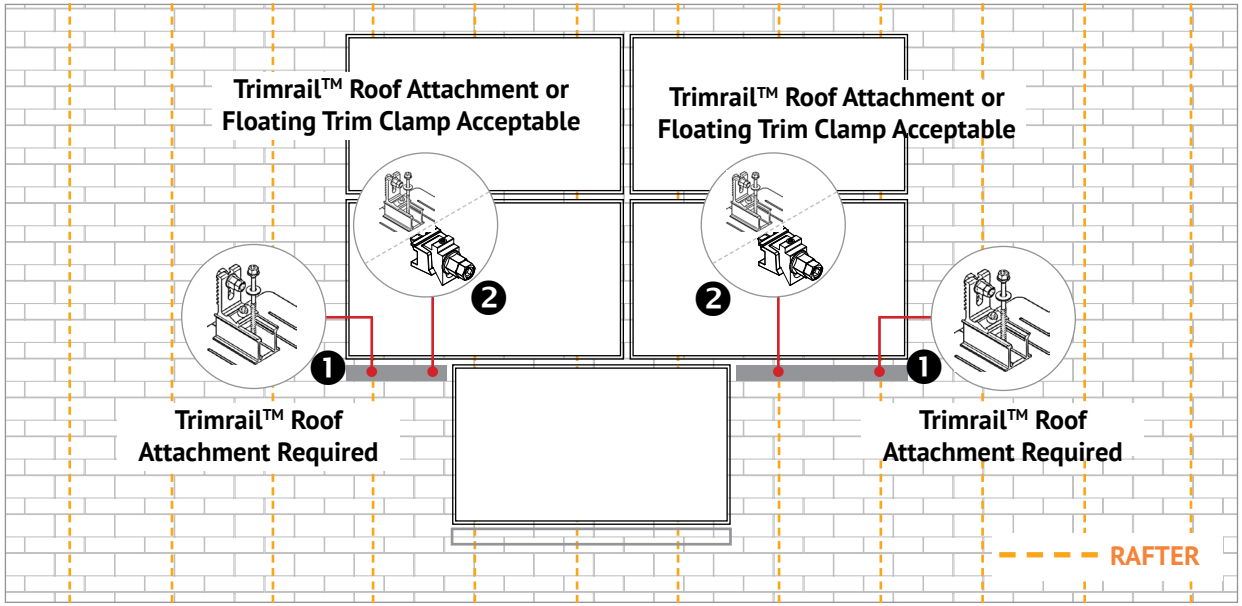

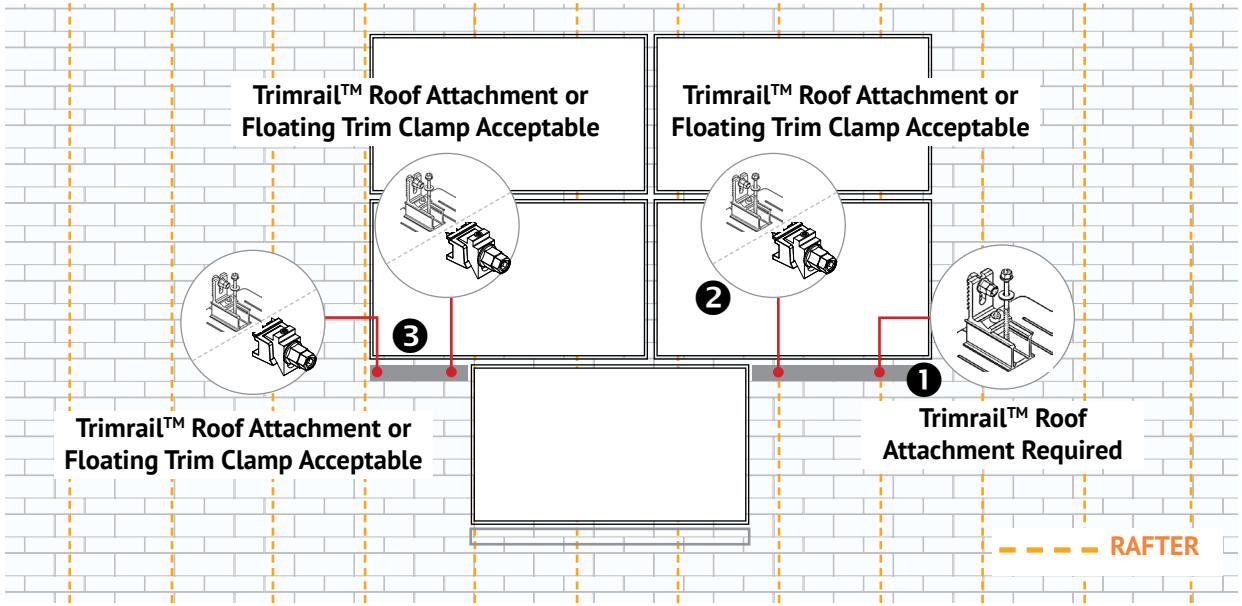

REQUIREMENTS FOR TRIMRAIL™ ROOF ATTACHMENTS & FLOATING TRIM CLAMP:

1. Trimrail™ Flashkit Roof Attachments shall be used at rafters nearest to and under outside edges of array (unless noted per item 3).

2. Use Floating Trim Clamp or Trimrail™ Flashkit Roof Attachment attached to deck without rafter support on the longest "free" side if only one (1) Trimrail™ Roof Attachment is utilized.

3. Use of 2 Floating Trim Clamps or 2 Trimrail™ Flashkit Roof Attachments attached to deck without rafter support is acceptable if the section of Trimrail™ being mounted is less than 24"

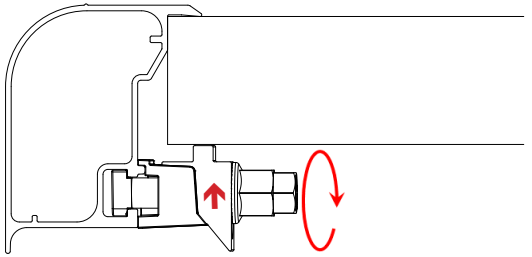

SECURING TRIMRAIL™ WITH FLOATING TRIM CLAMPS:
Installation of floating trim sections may occur before module is secured. Floating Trim Clamp captures module flange when nut is tightened to 20 ft-lbs as shown above.

NOTE: THE FLOATING TRIM CLIP WILL PROVIDE AN ELECTRICAL BOND BETWEEN THE MODULE AND THE TRIM RAIL. IF AT LEAST ONE FLOATING TRIM CLIP IS NOT ATTACHED TO A RAIL SECTION, A WIRE BONDING CLIP OR OTHER APPROVED BONDING DEVICE MUST BE INSTALLED.

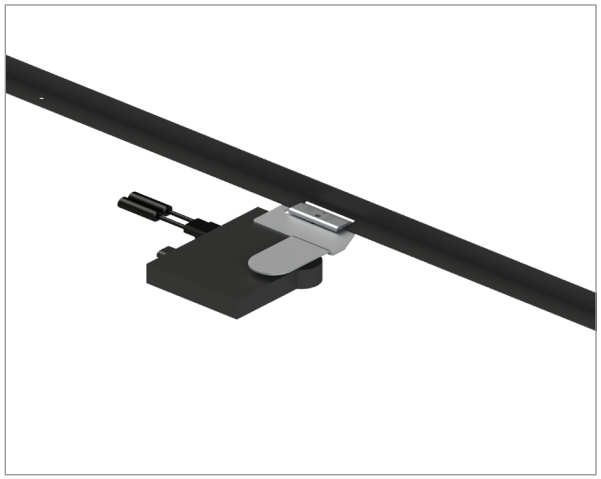



PRE-INSTALL MLPE:
Install MLPE in a location on the module that will not interfere with microrails or grounding lugs.
To use trunk cable most efficiently, install MLPE components in the same locations on all modules in the same row.
TORQUE VALUE: 20 ft-lbs

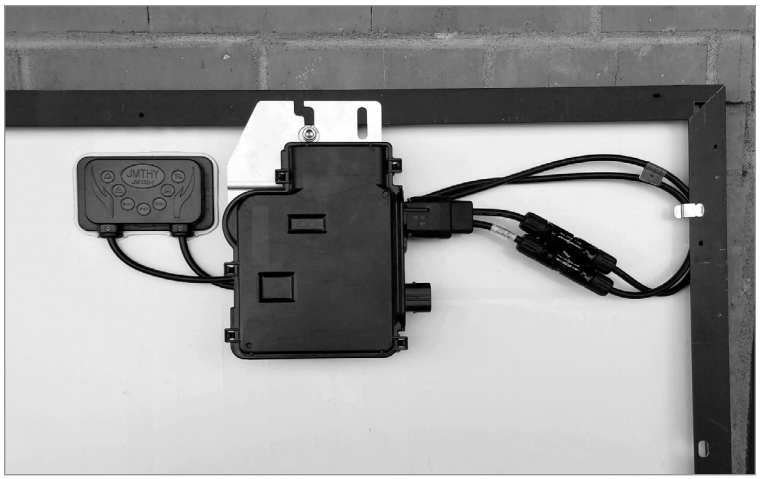



MLPE MOUNTING LOCATION & WIRE MANAGEMENT:
Install the MLPE Mount on the short side of the module when mounting in landscape orientation. Install MLPE Mount on the long side of module when mounting in portrait orientation.

ABOVE IMAGE: MLPE mount with microinverter & wire management
BELOW IMAGE: MLPE mount with power optimizer & wire mgnt.





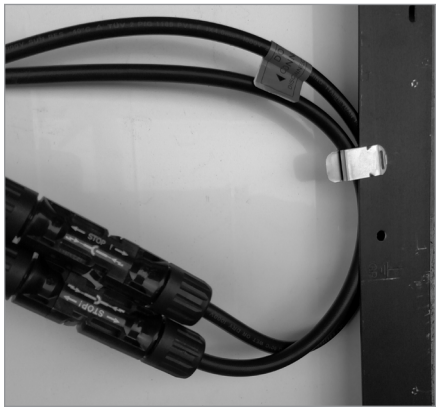

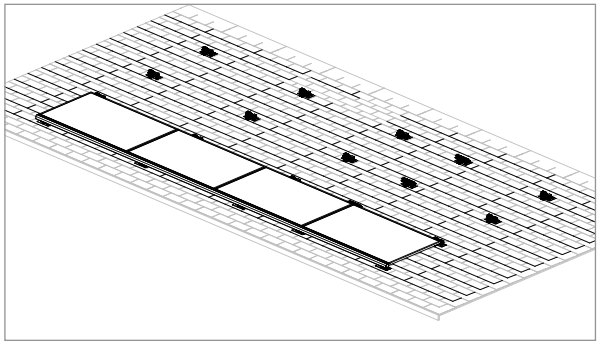

MICROINVERTER:
Before installing a row of modules place microinverter trunk cable.

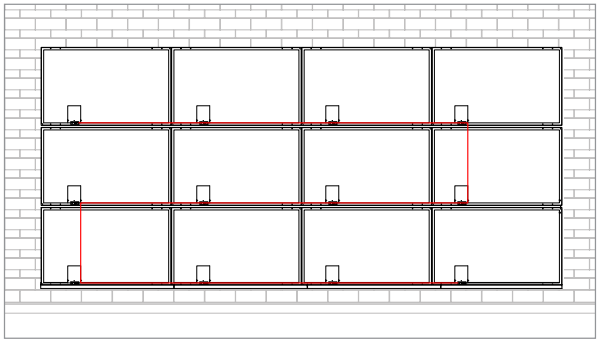

WIRE MANAGEMENT:
Verify wire management is complete after each row is installed.

EXAMPLES:

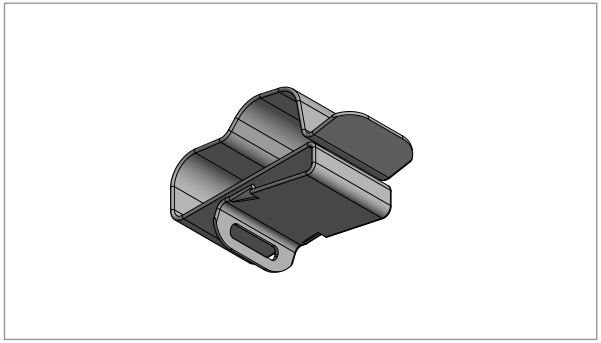

MICROINVERTER TRUNK CABLE:
The trunk cable can be managed securely by using stainless steel wire management clips attached to the module frame.

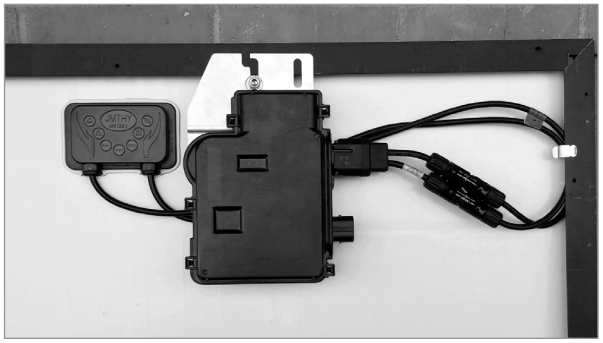

TIPS & TRICKS:
Twisting the PV module wires and/or tying a loose knot can also help manage these wires.

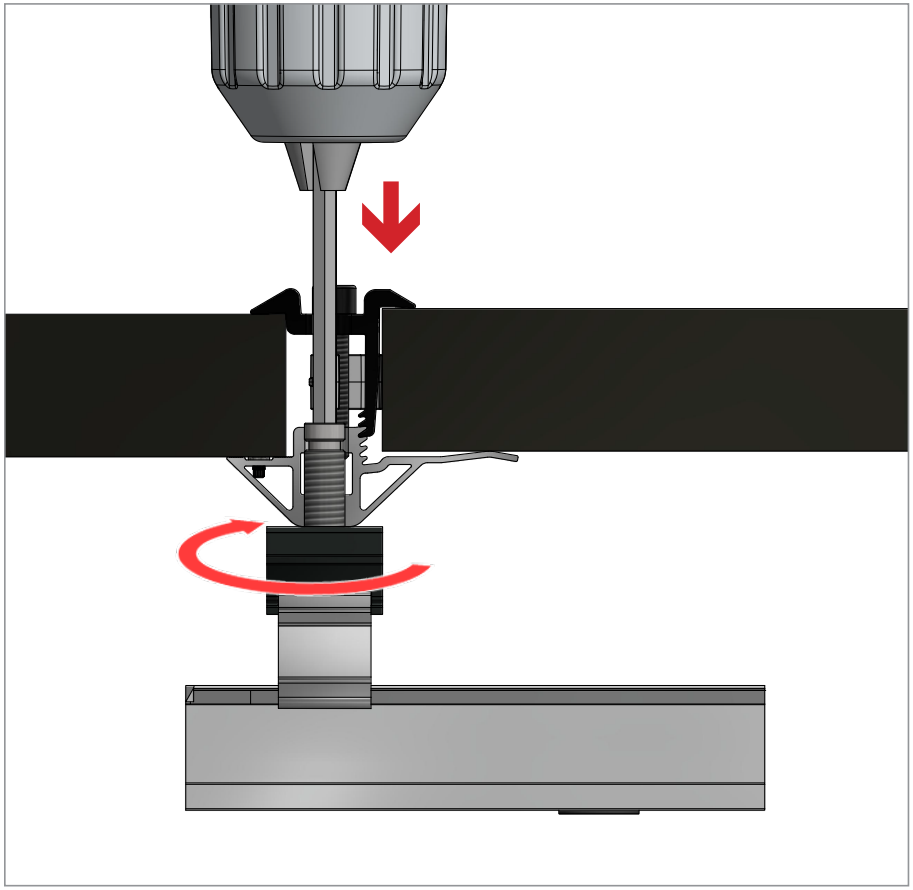

POST INSTALL HEIGHT ADJUSTMENT:
Height adjustment of each attached Microrail™ assembly can be performed by rotating the height adjustment feature with a ¼" hex drive tool. Clockwise rotation will adjust the Microrail™ upward. Counter clockwise rotation will adjust the Microrail™ downward. Insert hex drive tool through holes in caps to access the height adjustment feature.

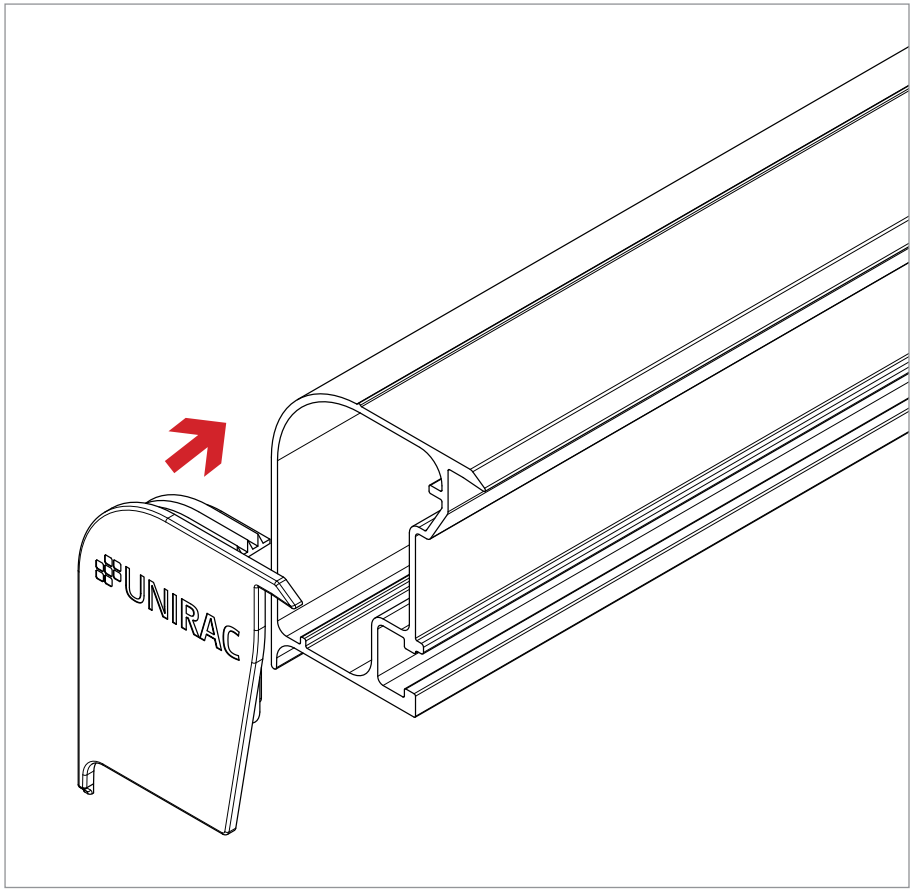

INSTALL END CAPS:
Install end caps at ends of exposed trimrail sections. Align end cap with trimrail and apply pressure until fully seated.

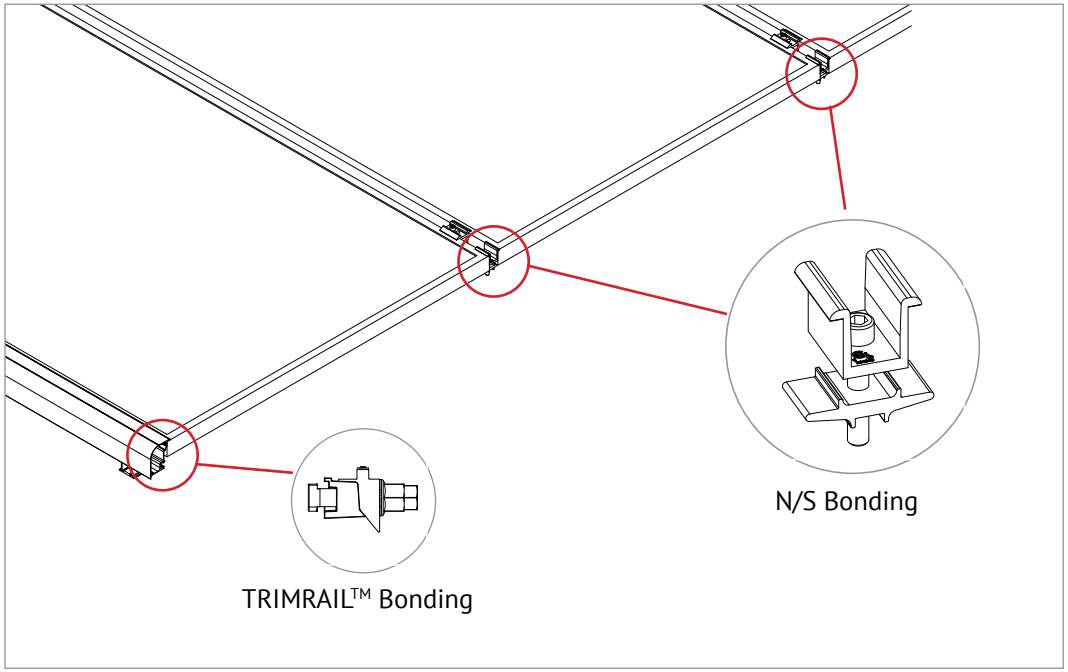

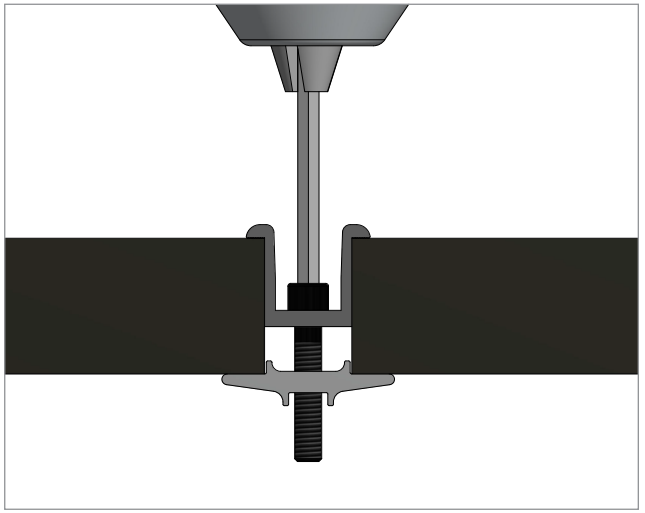

N/S Bonding Clamp:
Insert clamp between modules.
Torque to 20 ft.-lbs.

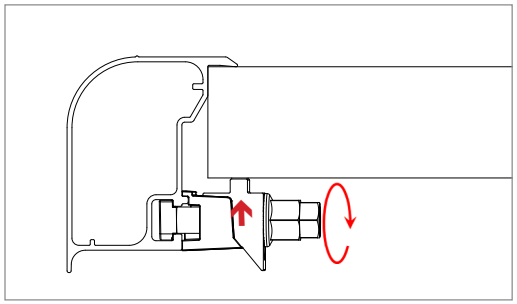

TRIMRAIL™ Bonding:
Insert clamp and T-bolt into trimrail slot. Tighten tri-drive nut until bonding pin contacts module.
Torque to 20 ft. lbs.

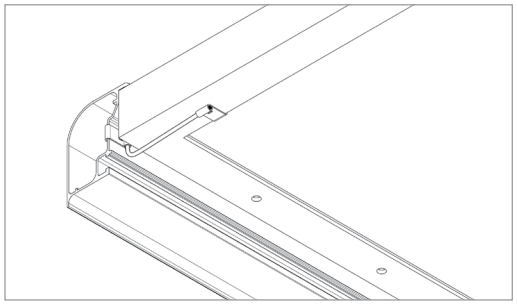

Trimrail Bonding Alternate Method:
Attach a bonding clip from the Trimrail™ to an adjacent module. Fully seat bonding clip until radius portion is in contact with Trimrail™ mating surface and module flange.

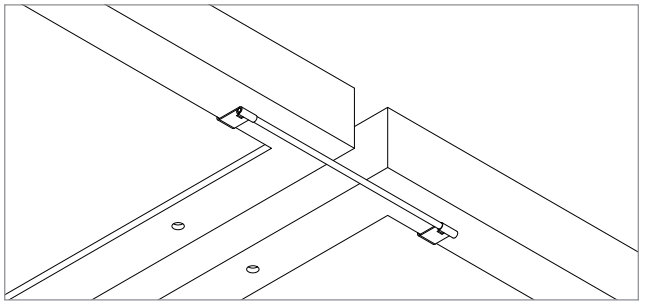

N/S Bonding Alternate Method:
Fully seat bonding clip on each module flange to provide bond across N/S module gap.

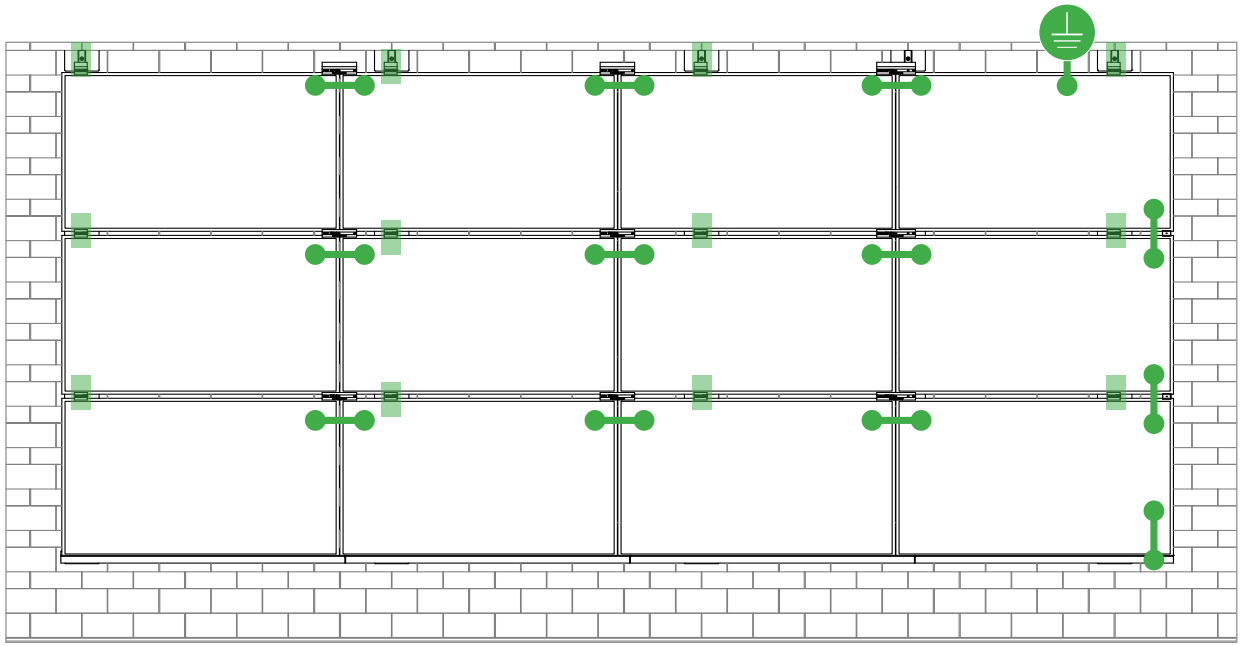

Star Washer is Single Use Only



TERMINAL TORQUE, Install Conductor and torque to the following:
4-6 AWG: 35in-lbs
8 AWG: 25 in-lbs
10-14 AWG: 20 in-lbs

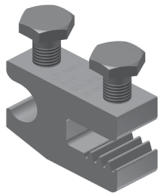

TERMINAL TORQUE, Install Conductor and torque to the following:
4-14 AWG: 35in-lbs

WEEBLUG Single Use Only

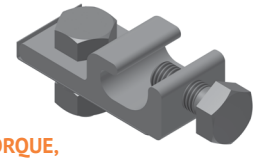

TERMINAL TORQUE, Install Conductor and torque to the following:
6-14 AWG: 7ft-lbs

LUG DETAIL & TORQUE INFO

Ilsco Lay-In Lug (GBL-4DBT)

- 10-32 mounting hardware
- Torque = 5 ft-lb
- AWG 4-14 - Solid or Stranded

LUG DETAIL & TORQUE INFO

Ilsco Flange Lug (SGB-4)

- 1/4" mounting hardware
- Torque = 75 in-lb
- AWG 4-14 - Solid or Stranded

LUG DETAIL & TORQUE INFO

Wiley WEEBLug (6.7)

- 1/4" mounting hardware
- Torque = 10 ft-lb
- AWG 6-14 - Solid or Stranded

NOTE: ISOLATE COPPER FROM ALUMINUM CONTACT TO PREVENT CORROSION

System bonding is accomplished through modules. System grounding accomplished by attaching a ground lug to any module at a location on the module specified by the module manufacturer.

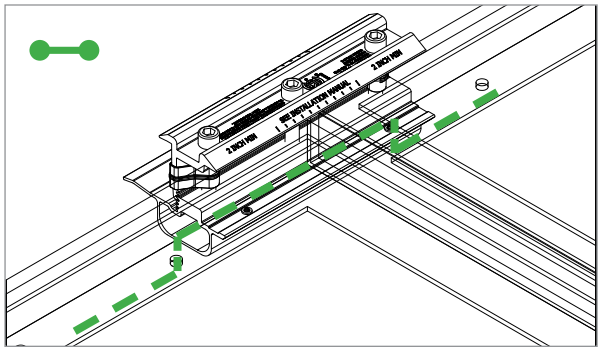

E-W BONDING PATH:
E-W module to module bonding is accomplished with 2 pre-installed bonding pins which engage on the secure side of the MicrorailTM and splice.

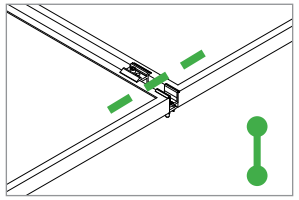

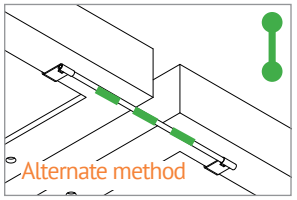

N-S BONDING PATH:
N-S module to module bonding is accomplished with bonding clamp with 2 integral bonding pins. **(refer also to alternate method)**

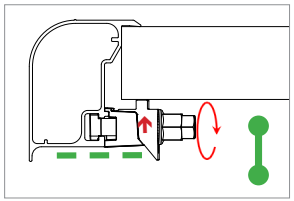

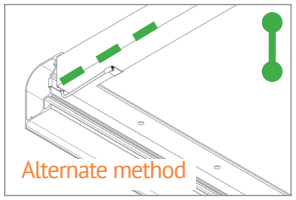

TRIMRAIL BONDING PATH:
Trimrail to module bonding is accomplished with bonding clamp with integral bonding pin and bonding T-bolt. **(refer also to alternate method)**

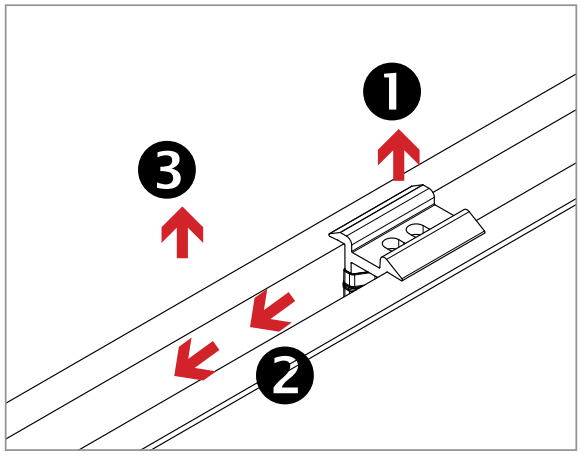

REMOVE 2" CAPS:

1. Remove capbolt
2. Separate cap from base by moving east/west
3. Remove cap

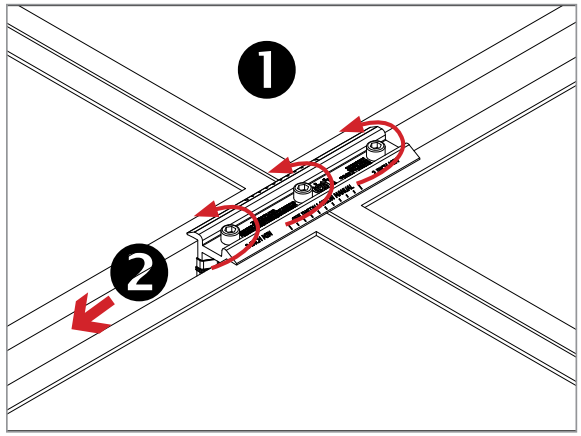

SLIDE FLOATING SPLICE:

1. Loosen (3) cap bolts approx. 3 turns.
2. Slide entire floating splice away from module being removed.

⚠ CAUTION

DO NOT FULLY REMOVE FASTENERS

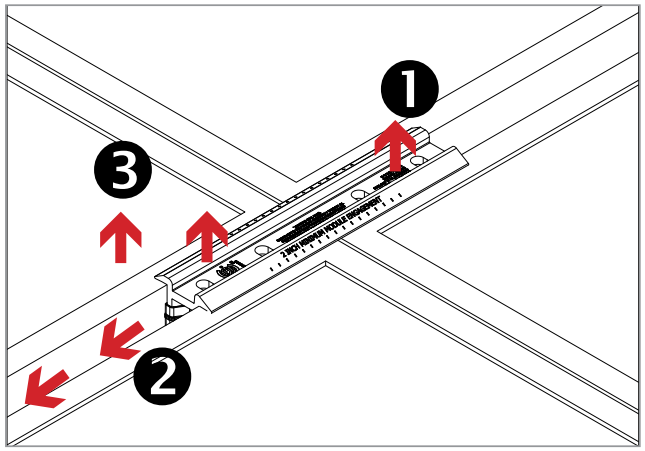

REMOVE 8" CAPS:

1. Remove (2) cap bolts.
2. Separate cap from base by moving east/west.
3. Remove cap.

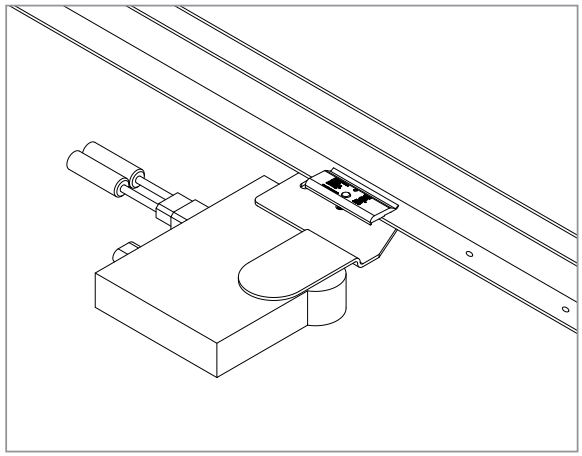

LIFT MODULE AND DISCONNECT MLPE CABLES

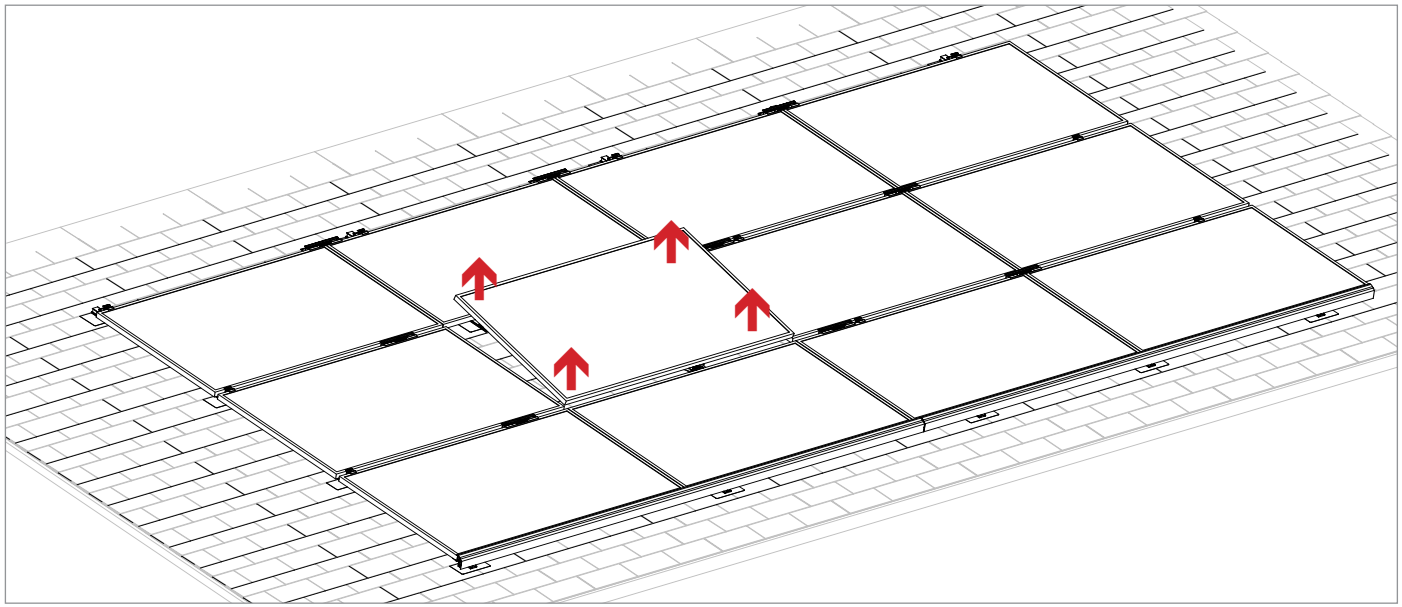

REMOVE MODULE. REVERSE STEPS TO REPLACE MODULE REMOVED

Bonding note: If both sides of array are bonded with NS Bonding Clips, as recommended, then no additional bonding is required for module maintenance.

If necessary, on the row of modules containing the module being removed, one additional bonding clip can be added to the edge of the array opposite of the edge with bonding clips already installed. This is only necessary when the module removal would break the bonding path.

⚠ CAUTION

- **Module removal may disrupt the bonding path and could introduce the risk of electric shock. Additional steps may be required to maintain the bonding path.**
- **Modules should only be removed by qualified persons in compliance with the instructions in this manual.**
- **When removing a module from the interior of a single row of modules, the adjacent modules must be bonded to maintain the bonding path. See Lug Detail & Torque Info on the System Bonding & Grounding page**

ELECTRICAL CONSIDERATIONS

SUNFRAME Microrail is intended to be used with PV modules that have a system voltage less than or equal to that allowable by the NEC. A minimum 10AWG, 105°C copper grounding conductor should be used to ground a system, according to the National Electric Code (NEC). It is the installer's responsibility to check local codes, which may vary.

INTERCONNECTION INFORMATION

There is no size constraint beyond structural thermal expansion limits on how many SUNFRAME Microrails & PV modules can be mechanically interconnected for any given configuration, provided that the installation meets the requirements of applicable building and fire codes.

GROUNDING NOTES

The installation must be conducted in accordance with the National Electric Code (NEC) and the authority having jurisdiction. Please refer to these resources in your location for required grounding lug quantities specific to your project. The grounding / bonding components may overhang parts of the array so care must be taken when walking around the array to avoid damage. Conductor fastener torque values depend on conductor size. This racking system may be used to ground and/or mount a PV module complying with UL 1703 only when the specific module has been evaluated for grounding and/or mounting in compliance with the included instruction

PERIODIC INSPECTION

Conduct periodic inspections for loose components, loose fasteners or any corrosion, immediately replace any affected components.

SYSTEM LEVEL FIRE CLASSIFICATION

The system fire class rating requires installation in the manner specified in the SUNFRAME MICRORAIL (SFM) Installation Guide. SFM has been classified to the system level fire portion of UL 1703. This UL 1703 classification has been incorporated into the UL 2703 product certification. SFM has achieved Class A, B & C system level performance for low slope & steep sloped roofs when used in conjunction with Type 1, Type 2, Type 29, Type 30, and Type 38 modules. Class A, B & C system level fire performance is inherent in the SFM design, and no additional mitigation measures are required. The fire classification rating is valid for any roof pitch. There is no required minimum or maximum height limitation above the roof deck to maintain the Class A, B & C fire rating for SFM. SUNFRAME MICRORAIL™ components shall be mounted over a fire resistant roof covering rated for the application.

Module Type	Roof Slope	System Level Fire Rating	Microrail Direction	Module Orientation	Mitigation Required
Type 1, Type 2, Type 29, Type 30, and Type 38	Steep Slope & Low Slope	Class A, B & C	East-West	Landscape OR Portrait	None Required

UL2703 TEST MODULES

See pages 28 and 29 for a list of modules that were electrically and mechanically tested or qualified with the SUNFRAME MICRORAIL (SFM) components outlined within this Installation Guide.

- Maximum Area of Module = 27.76 sqft
- UL2703 Design Load Ratings:
  a) Downward Pressure – 75 PSF / 3600 Pa
  b) Upward Pressure – 33 PSF / 1600 Pa
  c) Down-Slope Load – 22.2 PSF / 1062 Pa
- Tested Loads:
  a) Downward Pressure – 113 PSF / 5400 Pa
  b) Upward Pressure – 50 PSF / 2400 Pa
  c) Down-Slope Load – 33.3 PSF / 1600 Pa
- Maximum Span = 6ft
- Use with a maximum over current protection device OCPD of 30A
- System conforms to UL Std 2703, certified to LTR AE-001-2012
- Rated for a design load of 1600 Pa / 3600 Pa with 24 inch span
- PV modules may have a reduced load rating, independent of the SFM load rating. Please consult the PV module manufacturer's installation guide for more information
- Down-Slope design load rating of 30 PSF/ 1400 Pa for module areas of 22.3 sq ft or less

LABEL MARKINGS

- System fire class rating: See installation instructions for installation requirements to achieve a specified system fire class rating with Unirac.
- Unirac SUNFRAME MICRORAIL™ is listed to UL 2703.
- All splices within a system are shipped with marking indicating date and location of manufacture.

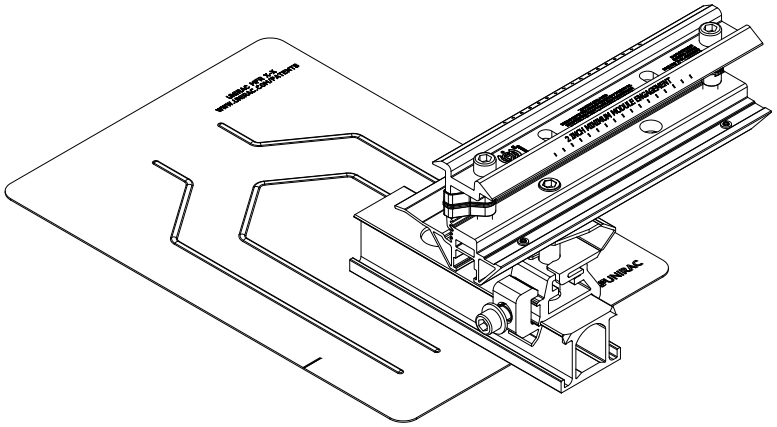

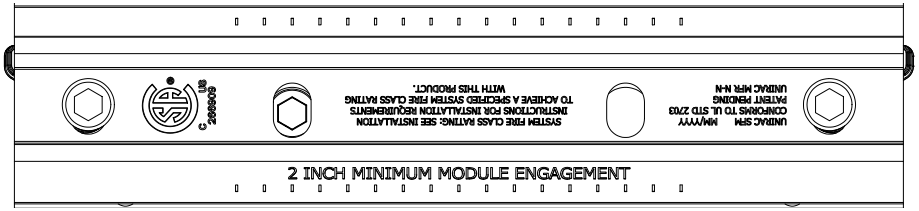

Electrical Bonding and Grounding Test Modules

The list below is not exhaustive of compliant modules but shows those that have been evaluated and found to be electrically compatible with the SFM system.

Manufacture	Module Model / Series
Aleo	P-Series
AMPS	AMPS-xxxN-108BB AMPS-xxxP-54BB
Aptos	DNA-108-(BF/MF)10-400W DNA-120-(BF/MF)10-440W, DNA-120-(BF/MF)26, DNA-144-(BF/MF)26 DNA-144-BF10-xxxW-DG
APTOS SOLAR	DNA-108-MFN10-xxxW
Astronergy	CHSM6612P, CHSM6612P/HV, CHSM6612M, CHSM6612M/HV, CHSM6610M (BL)(BF)/(HF), CHSM72M-HC CHSM72M(DG)/F-BH CHSM72N(DG)/F-BH
Auxin	AXN10Mxxx AXN6M610T AXN6M612T AXN6P610T AXN6P612T AXNG1M SERIES
Axitec	AC-xxxMBT/144V AC-xxxTGB/144TS AXIblackpremium 60 (35mm), AXIpower 60 (35mm), AXIpower 72 (40mm), AXIpremium 60 (35mm), AXIpremium 72 (40mm). AC-xxxTGB/144WS-US AC-xxxTGB/96BB AC-xxxTGB/108BB
Bila Solar	AA550US-6x24GG

Manufacture	Module Model / Series
Boviet	BVM6610, BVM6610M-xxxS-H-HC BVM6610M-xxxS-H-HC-BF BVM6612 BVM7612M-H-HC-BF-DG
BYD	P6K & MHK-36 Series
Canadian Solar	CS1(H/K/U/Y)-MS CS3(K/L/U), CS3K-MB-AG, CS3K-(MS/P) CS3N-MS, CS3U-MB-AG, CS3U-(MS/P), CS3W CS5A-M, CS6(K/U), CS6K-(M/P), CS6K-MS CS6.1-54TM-H CS6.2-48TM-xxxH CS6.2-66TB-xxxHR CS6P-(M/P), CS6U-(M/P), CS6V-M, CS6X-P
Centrosolar America	C-Series & E-Series
CertainTeed	CT2xxMxx-01 CT2xxPxx-01 CT54M10XXX-N07 CT72M10XXX-N07 CTTCxxxHC12-08 CTxxxHC11-04 CTxxxM-03 CTxxxMxx-02 CTxxxMxx-04
Dehui	DH-60M
Eco Solargy	Orion 1000 & Apollo 1000
EMMVEE	ExxxHCBG144-T ExxxHCBT144-T
Energy America	ZLK-xxx
Es Foundry	ES-DN8-H54B-xxx

Manufacture	Module Model / Series
Es Foundry (Cont.)	ES-DN8-H72-xxx ES-DP8-H54B-xxx ES-DP8-H72-xxx
ET Solar	ET-M672BHxxxTW ET-N772TBHxxxGL
Fellow Energy	FE72-18X(ND)
Freedom Forever	FF-MP1-BBB-xxx FF-MP-BBB-370 FF-MP-BBB-xxx,
FreeVolt	Mono PERC
GCL	GCL-P6 & GCL-M6 Series
Gstar Solar	GSD7S54T-xxxBT GSP7G54M(H)
Hansol	TD-AN3, TD-AN4, UB-AN1, UD-AN1
Heliene	132HC M10 SL Monofacial 144HC M10 NTYP SL Bifacial Module 144HC M10 SL Bifacial 144HC M6 Monofacial/ Bifacial Series, 156HC M10 NTYP SL Bifacial Module 36M, 60M, 60P, 72M & 72P Series,
HT-SAAE	HT72-18X(ND)-F
HT Solar	HT60-156(M) (NDV) (-F), HT 72-156(M/P)
Hyundai	KG, MG, TG, RI, RG, TI, MI, HI & KI Series HiA-SxxxHG HiN-TxxxNF(BK) HiN-TxxxNI HiN-TxxxNJ HiS-SxxxOJ

- Unless otherwise noted, all modules listed above include all wattages and specific models within that series. Variable wattages are represented as "xxx"
- Items in parenthesis are those that may or may not be present in a compatible module's model ID
- Slashes "/" between one or more items indicates that either of those items may be the one that is present in a module's model ID
- Please see the SFM UL2703 Construction Data Report at unirac.com to ensure the exact solar module selected is approved for use with SFM
- SFM Infinity is not compatible with module frame height of less than 30mm and more than 40mm. See Module Mounting section, page 15 for further information

Electrical Bonding and Grounding Test Modules

The list below is not exhaustive of compliant modules but shows those that have been evaluated and found to be electrically compatible with the SFM system.

Manufacture	Module Model / Series
Hyundai (Cont.)	HiS-SxxxYH(BK)
INDEPWR Solar	iPWR-M10-54BX2S-xxxW iPWR-M10-60BX2S-xxxW
ITEK	iT, iT-HE & iT-SE Series
Japan Solar	JPS-60 & JPS-72 Series
JA Solar	JAP72SYY-xxx/ZZ, JAP6(k)-60-xxx/4BB, JAP60SYY-xxx/ZZ, JAM6(k)-72-xxx/ZZ, JAM72SYY-xxx/ZZ, JAM6(k)-60-xxx/ZZ, JAM60SYY-xxx/ZZ. i. YY: 01, 02, 03, 09, 10 ii. ZZ: SC, PR, BP, HiT, IB, MW, MR JAM54D41-xxx/MB JAM54S31 xxx/MR JAM6(K)-60/xxx JAM6-60-xxx/SI JAM66D45 LB JAM72D10 xxx/MB JAM72D40 xxx/MB JAM72S30 /MR JAP6(k)-72-xxx/4BB JAP6 60-xxx
Jinko Solar	Eagle JKMxxxM JKM & JKMS Series JKMxxxM-6RL3-B JKMxxxM-72HL-V JKMxxxM-7RL3-TV JKMxxxN-72HL4-BDV (30mm &35mm Frame Height) JKMxxxN-72HL4-BDX
Kyocera	KU Series
LA Solar	LSxxxBF (530-550 watt range) LSxxxBL (410 watt) LSxxxBL (430-450 watt range)

Manufacture	Module Model / Series
LA Solar (Cont.)	LSxxxBL (530-550 watt range) LSxxxHC (430-450 watt range)
LG Electronics	LGxxxN2T-A4 LGxxx(A1C/E1C/E1K/N1C/N1K/N2T/N2W/Q1C/Q1K/S1C/S2W)-A5 LGxxxN2T-B5 LGxxxN1K-B6 LGxxx(A1C/M1C/M1K/N1C/N1K/Q1C/Q1K/QAC/QAK)-A6 LGxxx(N1C/N1K/N2T/N2W)-E6 LGxxx(N1C/N1K/N2W/S1C/S2W)-G4 LGxxxN2T-J5 LGxxx(N1K/N1W/N2T/N2W)-L5 LGxxx(N1C/Q1C/Q1K)-N5 LGxxx (N1C/N1K/N2W/Q1C/Q1K)-V5
LONGi	LR4-60(HIB/HIH/HPB/HPH)-xxxM LR4-72(HIH/HPH)-xxxM LR4-72HBD xxxM LR5-54-HPB-xxxM LR5-54HTB xxxM LR6-60(BK)(PE)(HPB)(HPH)-xxxM (35mm) LR6-60(BK)(PE)(PB)(PH)-xxxM (40mm) LR6-60(BP/HBD/HIBD)-xxxM (30mm) LR6-72(BK)(HV)(PE)(PB)(PH)-xxxM (40mm) LR6-72(BP)(HBD)(HIBD)-xxxM (30mm) LR6-72(HV)(BK)(PE)(PH)(PB)(HPH)-xxxM (35mm) LR8-54HGBB
Maxeon	SPR-MAX6-xxx SPR-MAX6-xxx-BLK
Meyer Burger	Meyer Burger Black Meyer Burger White
Mission Solar Energy	MSExxxSX5K

Manufacture	Module Model / Series
Mission Solar Energy(-Cont.)	MSE Series MSExxxHT0B MSExxxSX5T MSExxxSX9R MSExxxSX9Z MSH10-xxxHN4G MSH10-xxxHN4G-DC11 MSH10-xxxHT4T MSI10-xxxHN4G MSI10-xxxHT4G MSI10-xxxHT4T MSN10xxxHT4T MSX10-xxxHN0B
Mitsubishi	MJE & MLE Series
mSolar	TXI10-xxx108BB
NE SOLAR	NESE xxx-66THB-G12R
Neo Solar Power Co.	D6M & D6P Series
Optivolt	OPT10MxxxB
Panasonic	EVPVxxx (H/K/PK), EVPVxxxHK EVPVxxxHK2 VBHNxxxKA01 & KA03 & KA04, VBHNxxxSA15 & SA16 VBHNxxxSA17(E/G) & SA18E, VBHNxxxSA17 & SA18, VBHNxxxZA01 VBHNxxxZA02, VBHNxxxZA03 VBHNxxxZA04
Peimar	SGxxxM (FB/BF)
Philadelphia Solar	PS-M144(HCBF)-xxxW PS-MNB108(HCBF)-xxxW

- Unless otherwise noted, all modules listed above include all wattages and specific models within that series. Variable wattages are represented as "xxx"
- Items in parenthesis are those that may or may not be present in a compatible module's model ID
- Slashes "/" between one or more items indicates that either of those items may be the one that is present in a module's model ID
- Please see the SFM UL2703 Construction Data Report at unirac.com to ensure the exact solar module selected is approved for use with SFM
- SFM Infinity is not compatible with module frame height of less than 30mm and more than 40mm. See Module Mounting section, page 15 for further information

Electrical Bonding and Grounding Test Modules

The list below is not exhaustive of compliant modules but shows those that have been evaluated and found to be electrically compatible with the SFM system.

Manufacture	Module Model / Series
Philadelphia Solar (Cont.)	PS-MNB144(HCBF)-xxxW PS-MNB156(HCBF)-xxxW
Phono Solar	PS-60, PS-72 PSxxxM8GFH-24TNH
Prism Solar	P72 Series
Q.Cells	Plus, Pro, Peak, G3, G4, G5, G6(+), G7, G8(+) Pro, Peak L-G2, L-G4, L-G5, L-G6, L-G7 Q.PEAK DUO (BLK)-G8(+) Q.PEAK DUO (BLK) ML-G10(+) Q.PEAK DUO (BLK) ML-G9(+) Q.PEAK DUO BLK-G6+ Q.PEAK DUO BLK-G6+/TS Q.PEAK DUO BLK ML-G10+ Q.PEAK DUO BLK ML-G10.a+ Q.PEAK DUO BLK ML-G10+/AC Q.PEAK DUO BLK ML-G10.B+ Q.PEAK DUO BLK ML-G10.C+ Q.PEAK DUO BLK ML-G10.C1+/AC Q.PEAK DUO BLK ML-G10+ / t Q.PEAK DUO BLK ML-G10.XY+/AC QPEAK DUO G10.C1+ AC Q.PEAK DUO L-G8.3/BFF Q.PEAK DUO XL-G(10/10.2/10.3/10.c/10.d) Q.PEAK DUO XL-G9/G9.2/G9.3 Q.TRON BLK M-G2+ Q.TRON BLK M-G2(.H1)(.F1)(.C1)+/AC Q.TRON BLK M-G2+ AC Q.TRON BLK M-G2.F+ Q.TRON BLK M-G2.F1+/AC Q.TRON BLK M-G2.H+ Q.TRON BLK M-G2.H1+/AC Q.TRON BLK M-G2+ SERIES

Manufacture	Module Model / Series
Q.Cells (Cont.)	(where “X” = any letter between A to W, where “Y” = any number between 1 to 9.) Q.PEAK DUO BLK ML-G10.D+ Q.PEAK DUO BLK ML-G10.D1+/AC Q.PEAK DUO XL-G11S.3 / BFG Q.PEAK DUO XL-G11S.B3 / BFG Q.PEAK DUO XL-G11S.L3 / BFG Q.TRON BLK M-G2.C+ Q.TRON BLK M-G2.C1+/AC Q.TRON BLK M-G2.C3+/AC Q.TRON BLK M-G2.C4+/AC Q.TRON BLK M-G2.D+ Q.TRON BLK M-G2.D1+/AC Q.TRON BLK M-G2.D2+/AC Q.TRON BLK M-G2.Y+
REC	Alpha (72) (Black) (Pure) N-Peak (Black) N-Peak 2 (Black) PEAK Energy 72 Series PEAK Energy BLK2 Series PEAK Energy Series RECxxxAA (PURE-R) (Pure-RX) RECxxxAA Pro M RECxxxAA Pure-RX RECxxxAA PURE-RX-DC RECxxxNP3 Black TP4 (Black) TwinPeak 2 BLK2 Series TwinPeak 2S(M)72(XV) TwinPeak 2 Series TwinPeak 3 Series (38mm) TwinPeak Series

Manufacture	Module Model / Series
Regitec Solar	RMHT54/xxxAB2
Renesola	RS6-xxxNBG-E3 Vitrus2 Series & 156 Series
Risen	RSM72-6 (MDG) (M), RSM60-6
Runergy	HY-DH132N11 HY-DH96N11B
SEG Solar	SEG-xxx-BMD-HV SEG-xxx-BMD-TB SEG-xxx-BTA-BG SEG-xxx-BTB-BG SEG-xxx-BTD-BG
S-Energy	SL40-60MAI/MBI/MCI-xxxV SN72 & SN60 Series (40mm)
Seraphim	SEG-6 & SRP-6 Series SRP-xxx-BTA-BG SRP-xxx-BTB-BG SRP-xxx-BTC-BG SRP-xxx-BTD-BG SRP-xxx-BTE-BG SRP-xxx-BMD-HV
Sharp	NU-SA & NU-SC Series
Silfab	SLA, SLG, BC Series & SILxxx(BL/NL/NT/HL/ML/BK/NX/NU/HC/QM) SIL-xxx QD SIL-xxx XL SIL-xxx XM SIL-xxx XM+
Sirius	ELNSM54M-HC-BF Series ELNSM54M-HC Series
Sirius PV	ELNSM54M-HC-N
Solarever USA	SE-166*83-xxxM-120N

- Unless otherwise noted, all modules listed above include all wattages and specific models within that series. Variable wattages are represented as "xxx"
- Items in parenthesis are those that may or may not be present in a compatible module's model ID
- Slashes "/" between one or more items indicates that either of those items may be the one that is present in a module's model ID
- Please see the SFM UL2703 Construction Data Report at unirac.com to ensure the exact solar module selected is approved for use with SFM
- SFM Infinity is not compatible with module frame height of less than 30mm and more than 40mm. See Module Mounting section, page 15 for further information

Electrical Bonding and Grounding Test Modules

The list below is not exhaustive of compliant modules but shows those that have been evaluated and found to be electrically compatible with the SFM system.

Manufacture	Module Model / Series
Solaria	PowerXT-xxxR-(AC/PD/BD)
Solaria (Cont.)	PowerXT-xxxC-PD PowerXT-xxxR-PM (AC)
Solar Space	SS8-54HD-xxx-N SS8-72HD-xxx-M SS8-78HD-xxx-M SSA-48HDB-xxx-N SSA-48HD-xxx-N SSA-54HDB-xxx-N SSA-54HD-xxx-N SSA-66HD-xxx-N
SolarWorld	Sunmodule Protect, Sunmodule Plus
Sonali	SS-M-360 to 390 Series, SS-M-390 to 400 Series, SS-M-440 to 460 Series, SS-M-430 to 460 BiFacial Series, SS 230 - 265
SunEdison	F-Series, R-Series & FLEX FXS Series
Suniva	MV Series & Optimus Series
Sunket Solar	SKT580M10-144S2
SunPlus Optimum	SR4-54HTB-xxxM
SunPower	A-Series A400-BLK , SPR-MAX3-XXX-R, X-Series, E-Series & P-Series, Axxx-BLK-G-AC, SPR-Mxxx-H-AC SPR-Mxxx-BLK-H-AC
Sunpro Power	SPDGxxx-120M12 SPDGxxx-N108M10 SPDGxxx-N144M10
Suntech	STP, STPXXXS - B60/Wnhb

Manufacture	Module Model / Series
Talesun	TP572, TP596, TP654, TP660,
Talesun (Cont.)	TP672, Hipor M, Smart TM3G48M TM3G54M TM3G66M TM7G60M TM7G72M TP6F72M TP6F72M(H)
Tesla	SC, SC B, SC B1, SC B2 Tesla Solar Panel TSP-415/TSP-420 TxxxH, TxxxS
Thornova	TS-BBT54(xxx) TS-BGT72(xxx)
TP Solar	TPxxxVG12R16NB
Trina Solar	PA05, PD05, DD05, DE06, DD06, PE06, PD14, PE14, DD14, DE09.05, DE14, DE15, PE15H TSM-DE15H(II) TSM-NE09RH.05 TSM-NEG19RC.20 TSM-NEG9RH.25
United Renewable Energy (URE)	D7(M/K)xxxH8A D7MxxxH7A FAKxxx(C8G/E8G) FAMxxxE7G-BB FAMxxxE8G(-BB) FBMxxxMFG-BB

Manufacture	Module Model / Series
Universal Solar	UNIxxx-108M-BB UNIxxx-120M-BB UNIxxx-120MH
Upsolar	UP-MxxxP(-B),
Upsolar (Cont.)	UP-MxxxM(-B)
URECO	F6MxxxE7G-BB
Vikram	Eldora, Solivo, Somera
VSUN	VSUNxxx-(108/120)M-BB VSUNxxx-108BMH VSUNxxx-108MH VSUNxxx-120BMH VSUNxxxN-108BMH-BB VSUNxxxN-108BMH-BB (SoftPaw) VSUNxxxN-108BMH-DG-BB VSUNxxxN-120BMH-BB (SoftPaw) VSUNxxxN-132BMHR VSUNxxxN-144BMH-DG
Waaree	AC & Adiya Series Bi-55-xxx BiN-08-xxx
Winaico	WST & WSP Series
Yingli	YGE & YLM Series
ZN Shine	ZXM6-72, ZXM6-NH144-166_2094 ZXM7-UHLDD108

- Unless otherwise noted, all modules listed above include all wattages and specific models within that series. Variable wattages are represented as "xxx"
- Items in parenthesis are those that may or may not be present in a compatible module's model ID
- Slashes "/" between one or more items indicates that either of those items may be the one that is present in a module's model ID
- Please see the SFM UL2703 Construction Data Report at unirac.com to ensure the exact solar module selected is approved for use with SFM
- SFM Infinity is not compatible with module frame height of less than 30mm and more than 40mm. See Module Mounting section, page 15 for further information