PART # TABLE	
P/N - US	DESCRIPTION
NUS5N-MI-US	NXT S-5-N MINI ASSY

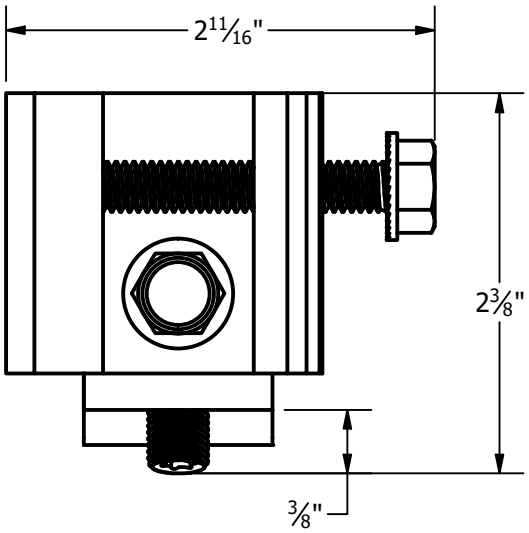

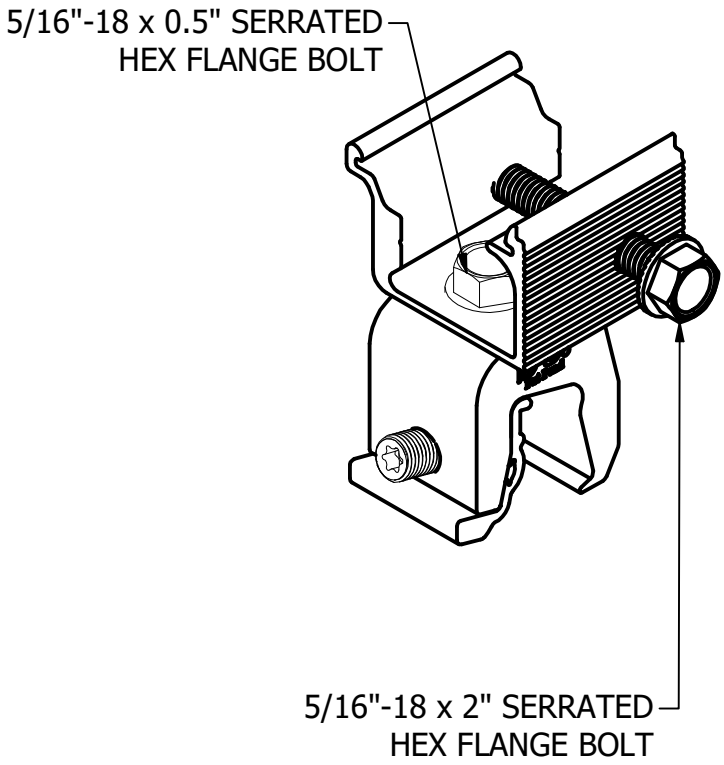

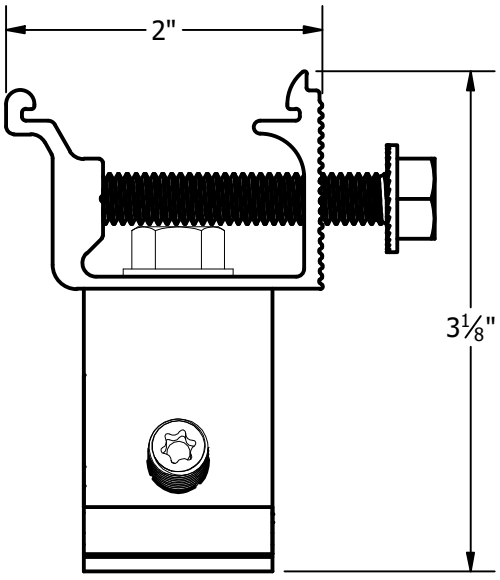

UNIRAC

1411 BROADWAY BLVD. NE
ALBUQUERQUE, NM 87102 USA
PHONE: 505.242.6411
WWW.UNIRAC.COM

PRODUCT LINE:	NXT UMOUNT
DRAWING TYPE:	PARTS ASSEMBLY
DESCRIPTION:	NXT S-5-N MINI ASSEMBLY
REVISION DATE:	6/12/2026

DRAWING NOT TO SCALE
ALL DIMENSIONS ARE NOMINAL

PRODUCT PROTECTED BY ONE OR MORE US PATENTS

LEGAL NOTICE

NUS5-A01

SHEET