GRIDFLEX 10D INSTALLATION GUIDE

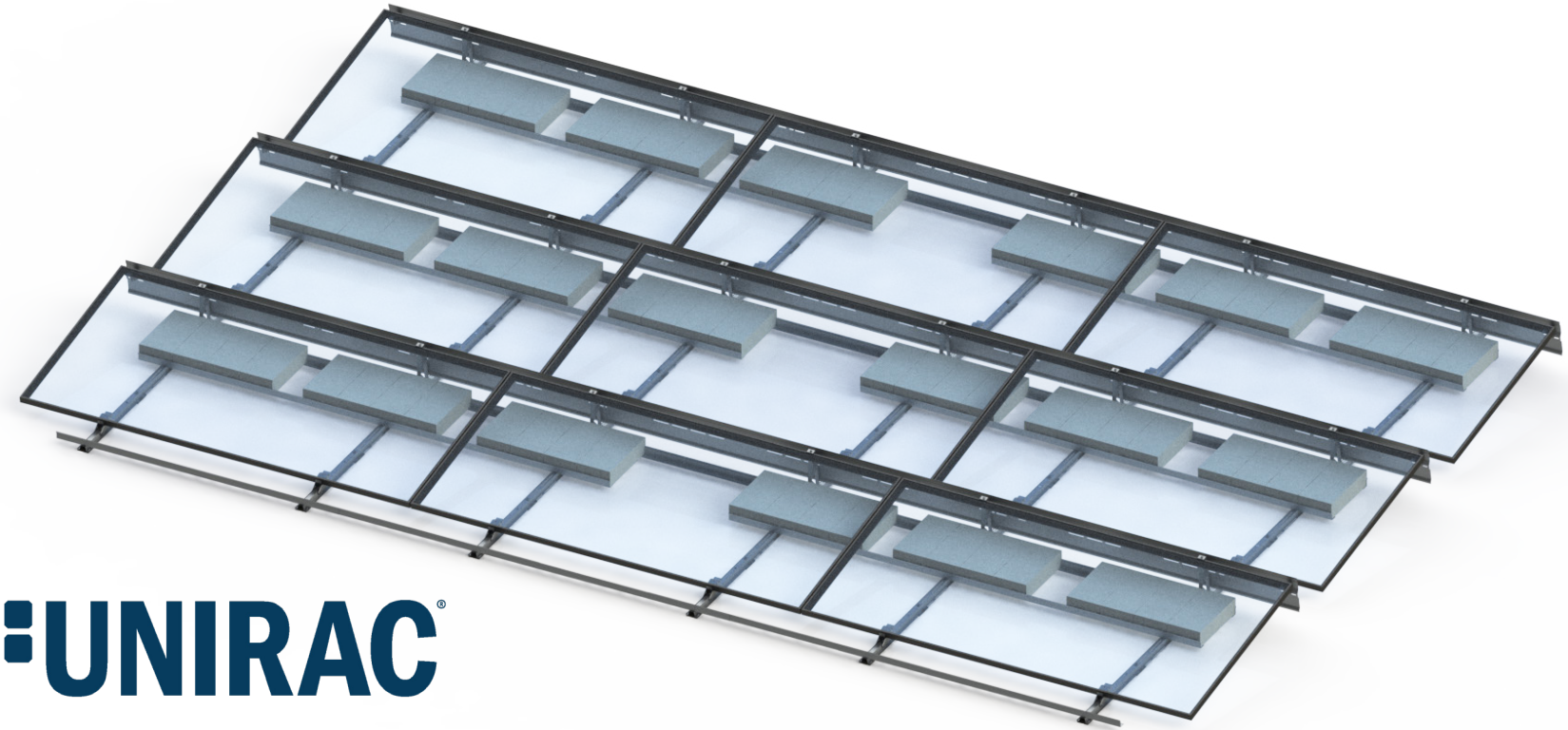

UNIRAC

UNIRAC Code-Compliant Installation Manual

© 2024 by Unirac, Inc. All rights reserved.

UNIRAC welcomes input concerning the accuracy and user-friendliness of this publication. Please write to publications@unirac.com.

PUB2026OCT13

GRIDFLEX 10D INSTALLATION GUIDE

TABLE OF CONTENTS

TOOLS AND SPECIFICATIONS 1
SYSTEM COMPONENTS 2-6
INSTALLATION STEPS 7-21
MODULE REPLACEMENT 22
WIRE MANAGEMENT 23-24
bonding and grounding 25-26
FIRE CODE COMPLIANCE 27
CODE COMPLIANCE NOTES 28
MECHANICAL LOAD TESTING 29
COMPATIBLE MODULES 30-36

TECHNICAL SPECIFICATIONS:

Maximum System Voltage: 1500V

Allowable Module Length Dimensions: 65" to 100"

Allowable Module Width Dimensions: 39" to 52"

Hardware: Stainless steel

TOOLS REQUIRED OR RECOMMEND FOR LAYOUT, ATTACHMENTS, AND INSTALLATION:

- Drill (Do Not Use an Impact Driver)
- 3/8" Socket
- Torque Wrench
- Tape Measure
- Chalk Reel
- Optional L1 and L2 Span Spacers

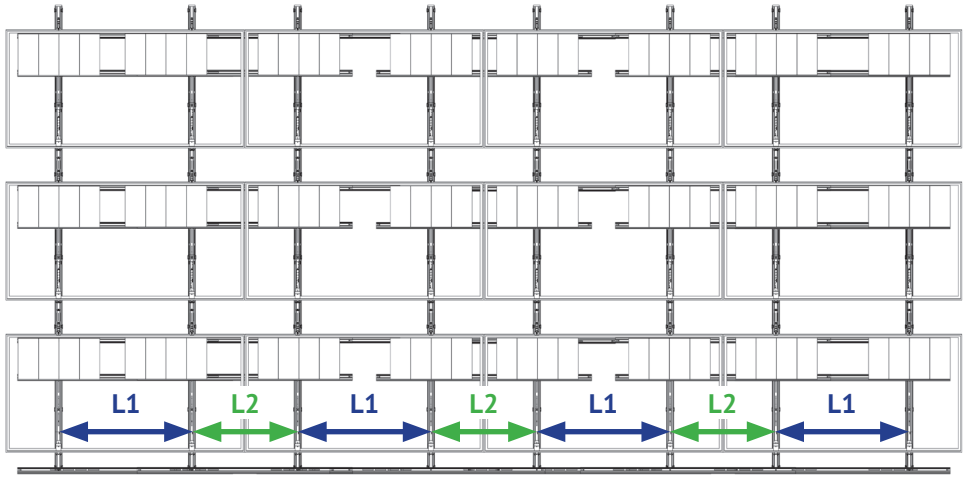

- ***Refer to construction drawing for L1 and L2 spans.***
- ***L1 and L2 spans are measured from rail center to rail center***

IMPORTANT

All applicable OSHA safety guidelines should be observed when working on a PV installation job site. The installation and handling of PV solar modules, electrical installation and PV racking systems involves handling components with potentially sharp metal edges. Rules regarding the use of gloves and other personal protective equipment should be observed.

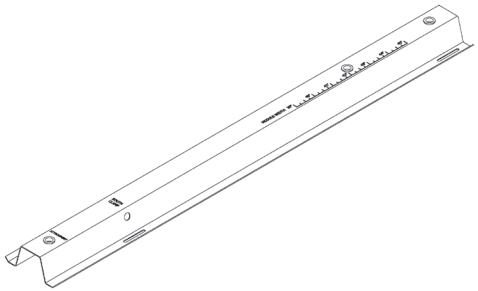

SOUTH RAIL (P/N: 380012/380022)
The rail is made of structural steel, pre-assembled with 1/4" SS Riv-Hex nuts. Module width scale is marked on rail, for overlap alignment.

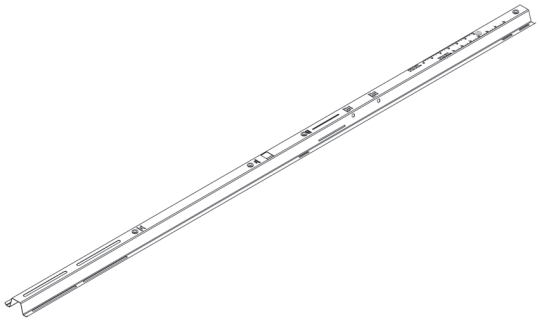

MID RAIL (P/N: 380101/380111/380121/ 380131)
The rail is made of structural steel, pre-assembled with 1/4" SS Riv-Hex nuts.

NOTE:
Mid rails 380101 & 380111 have a provision to adjust the row to row spacing (10" or 13"). Two module-width scales, each corresponding 10" and 13" row spacing are printed on rail, so that rails are overlapped to achieve accurate module width connection.

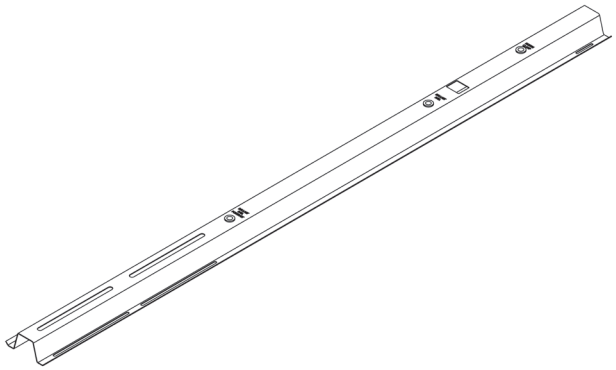

NORTH RAIL (P/N: 380201)
The rail is made of structural steel, pre-assembled with 1/4" SS Riv-Hex nut .

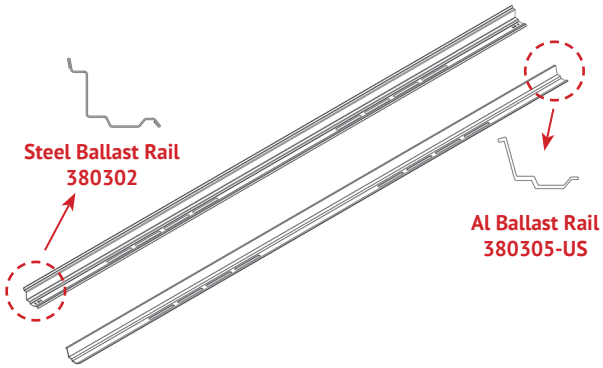

BALLAST RAILS (P/N: 380302/ 380305-US)
Ballast rails are made of structural steel or Aluminum and can hold up to 8 standard 4"x8"x16" solid concrete cap blocks

P/N stands for Part Number

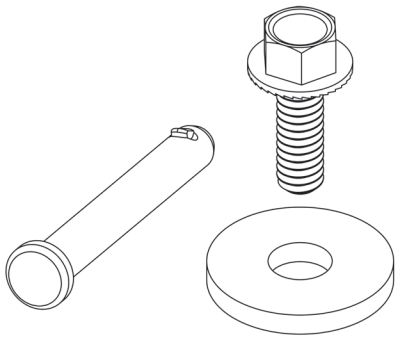

HARDWARE KIT (P/N: 380930)
This Kit is consists of

- Serrated Flange Hex Head Bolt, 0.25-20 x 0.75 *(Qty: 100)*
- Flat Washer 11-32 x 1 x 1.25 *(Qty: 40)*
- Self-Locking Clevis Pin, 0.25 x 1.925 *(Qty: 20)*

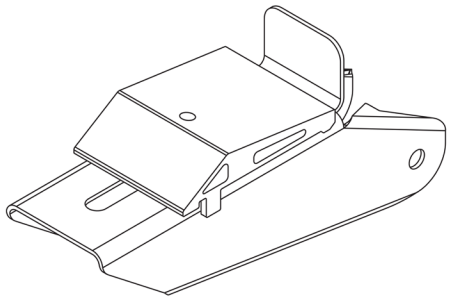

SOUTH CLAMP (P/N: 380701)
The south clamp assembly is made of a structural steel and engages the return flange underneath the module to secure the module.

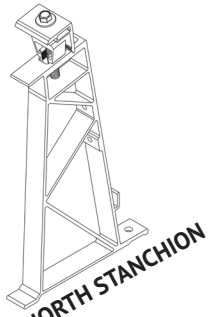

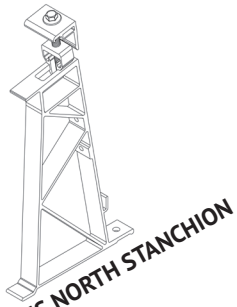

NORTH STANCHION (P/N: 380601),
US NORTH STANCHION (P/N: 380601-US)
The north stanchion assembly is made of a mill finish Aluminum and secures the module.

Rated for Multi Use

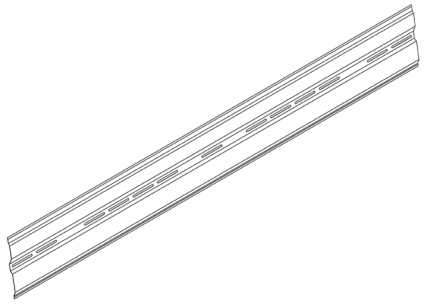

WIND DEFLECTORS
(P/N: 380400/ 380410/380420/ 380430/ 380440/ 380450/380401 380402)
Wind deflectors are made of steel. Multiple lengths are available to accommodate different module lengths

IMPORTANT: WIND DEFLECTORS ARE REQUIRED ON ALL MODULES

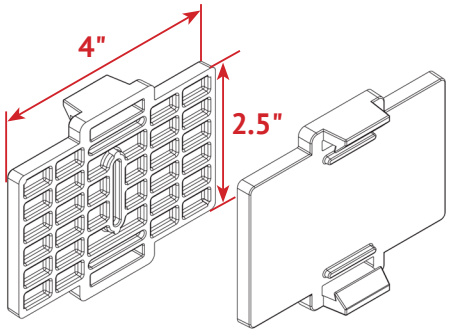

CLIP-ON ROOF PAD (P/N: 380802)
Roof Pad provides a protective interface between the rails and roofing material to protect the roof membrane.

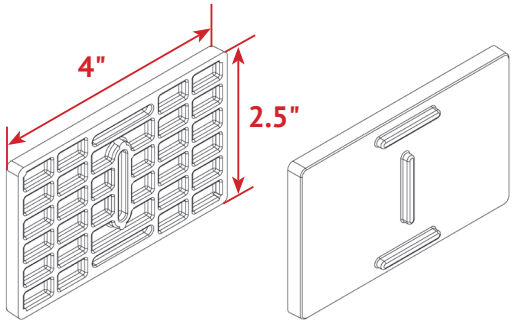

ROOF PAD STACK (P/N: 380800)
Roof Pad Stack is placed beneath the Clip-on-Roof Pad to level the array at uneven surfaces.

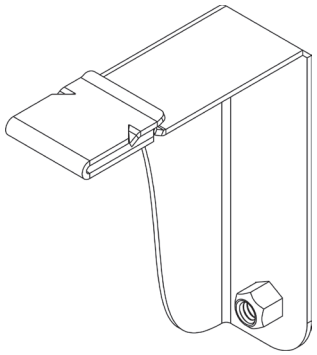

WIND DEFLECTOR BRACKET (P/N: 380405)
The wind deflector end bracket is made of steel and reinforces the cantilever of the wind deflector at the edges of array.

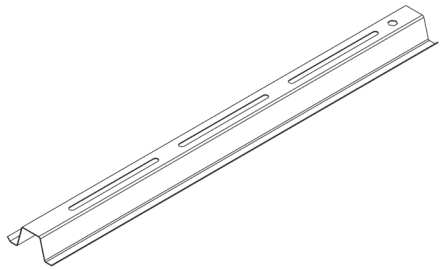

SOUTH RAIL STIFFENER (P/N: 380050/380051)
The south rail stiffener is made of steel and reinforces the mid rail to south rail connection.

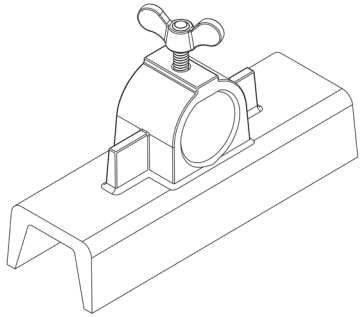

GRIDFLEX SPACER ASSEMBLY (P/N: GFSPACE1)
The GridFlex Spacer Assembly is a durable plastic component designed to attach securely to standard conduit. Serving as a guide jig, it ensures precise alignment and consistent spacing when laying base rails on the roof, making installation faster, easier, and more accurate.

WIRE MANAGEMENT ACCESSORIES (OPTIONAL)

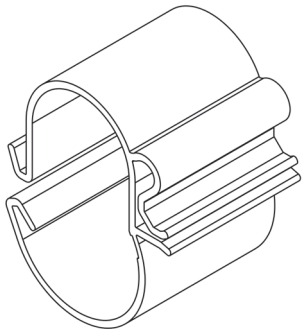

WIRE MANAGEMENT CLIP, (P/N: 380902)
The wire management clip is made of PVC, ***f1 rated for outdoor use per UL 746C***, and is used to route wires in the east-west direction along the ballast rail

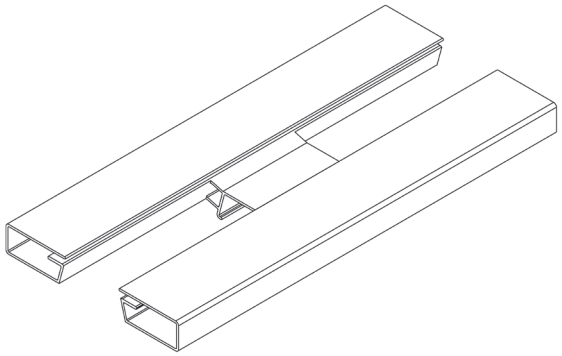

HOMERUN WIRE MANAGEMENT COVER (P/N: 380922/ 380942)
The homerun wire management cover is made of PVC, ***f1 rated for outdoor use per UL 746C***, and is used to route and protect homerun bundles running north-south direction between modules rows.

NOTE: Use the appropriate Homerun Wire Management Cover based on row spacing:
- **380922 — For 13 in. row spacing**
- **380942 — For 17 in. row spacing**

NOTE
The following ratings apply to the Wire Management Clip and Homerun Wire Management cover components:
- **Maximum wire fill:**
  - **12 x #10AWG**
  - **8 x #8AWG**
  - **5 x #6AWG**
- **Maximum Operating Temperature: 80°C**
- **Not rated for mechanical strength.**

Made in USA Components Part Number Data

PART NUMBER	DESCRIPTION
380302-US	GF10 BALLAST RAIL
380305-US	GF10 AL BALLAST RAIL
380101-US	GF10 MR, MW 39-45", RS 10/13"
380121-US	GF10 MR, MW 39-45", RS 17"
380111-US	GF10 MR, MW 45-52", RS 10/13"
380131-US	GF10 MR, MW 45-52", RS 17"
380201-US	GF10 NR
380012-US	GF10 SR, MW 39-45"
380022-US	GF10 SR, MW 45-52"
380400-US	GF10 WIND DEFLECTOR <69"
380401-US	GF10 WIND DEFLECTOR 69-73"
380402-US	GF10 WIND DEFLECTOR 73-77"
380410-US	GF10 WIND DEFLECTOR 77-82"
380420-US	GF10 WIND DEFLECTOR 82-87"
380430-US	GF10 WIND DEFLECTOR 87-92"
380440-US	GF10 WIND DEFLECTOR 92-97"
380450-US	GF10 WIND DEFLECTOR 97-100"
380802-US	CLIP-ON ROOF PAD
380800-US	ROOF PAD STACK
380050-US	GF10 RAIL STIFFENER, MW 39-45"
380601-US	GF10 US NORTH STANCHION ASSY
380051-US	GF10 RAIL STIFFENER, MW 45-52"
GFSPACE1	GRIDFLEX SPACER ASSEMBLY
380930	GFXD HARDWARE KIT

PART NUMBER	DESCRIPTION
380922/380942	HOMERUN COVER ASSEMBLY
380902	BALLAST RAIL CLIP

AL - Aluminum
MR - Mid Rail
NR - North Rail
SR - South Rail
MW - Module Width
RS - Row Spacing

SETTING UP GRIDFLEX SPACER JIG

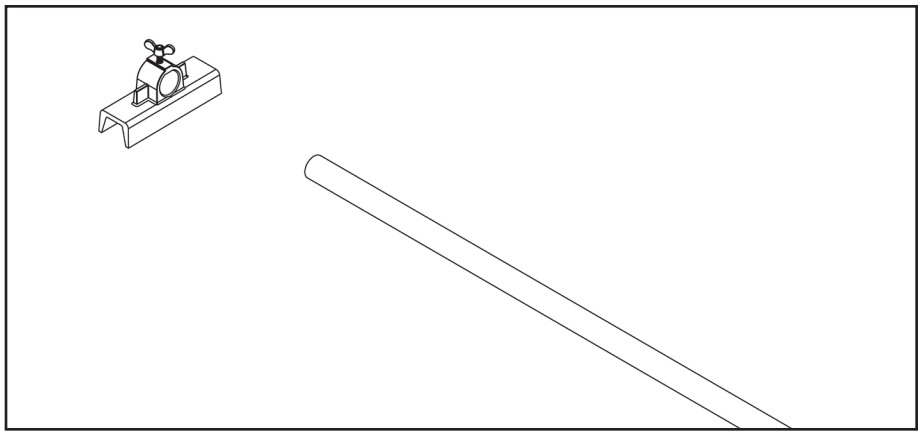

STEP 1

- Take a standard metallic conduit pipe with a length equal to a few inches longer than one module length.
- Place a GridFlex Spacer onto one end of the conduit pipe.

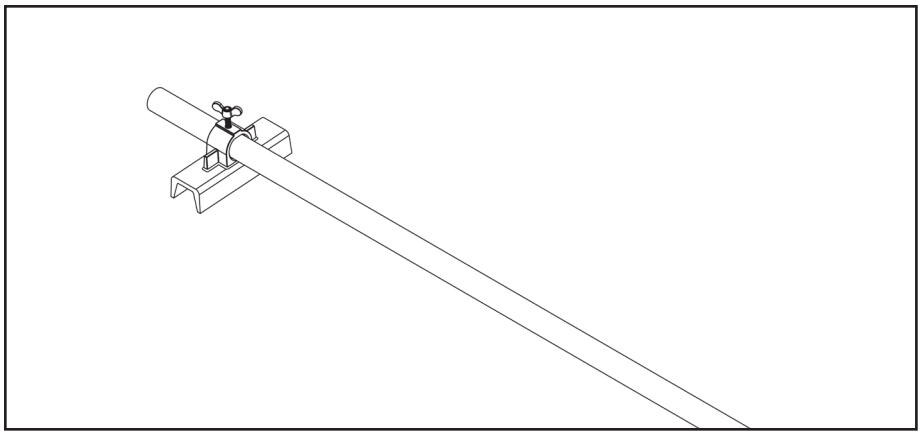

STEP 2

- Tighten the wing bolt to secure the GridFlex Spacer to the conduit pipe.

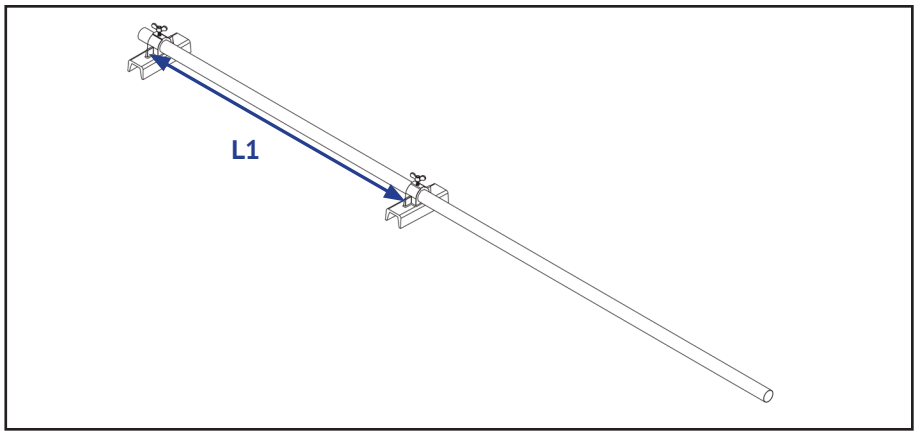

STEP 3

- Measure the L1 span distance from the first GridFlex Spacer and attach the second GridFlex Spacer.

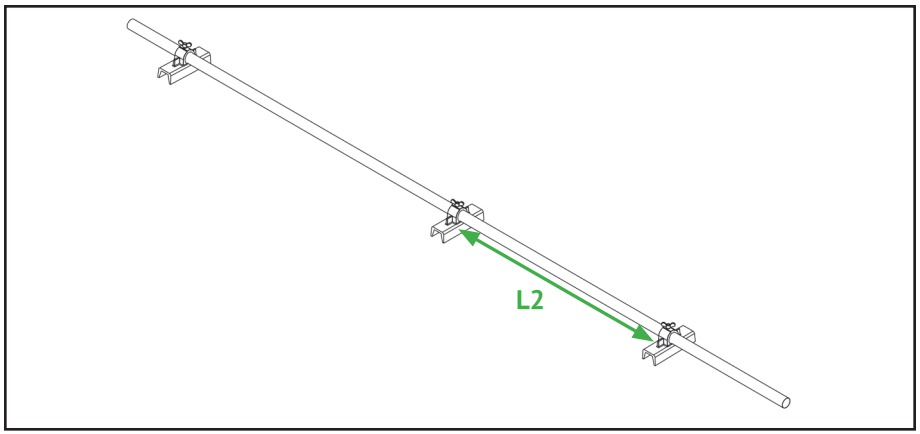

STEP 4

- Measure the L2 span distance from the second GridFlex Spacer and attach the third GridFlex Spacer.

INSTALL ROOF PADS ON RAILS

Attach roof pads to all pre-punched slots in rails. Install a roof pad under every north stanchion, rail overlap, and south clamp located at the south edge of the array.

⚠ CAUTION

Ensure there is no direct contact between metal parts and the roof membrane to prevent damage and potential leaks.

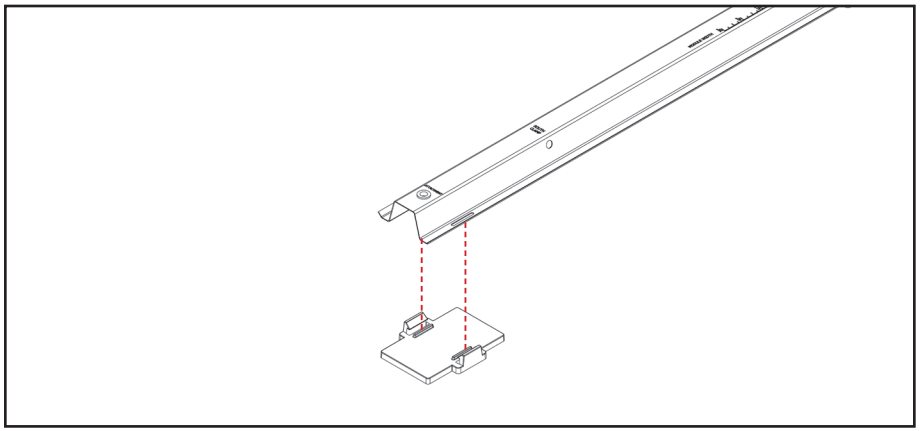

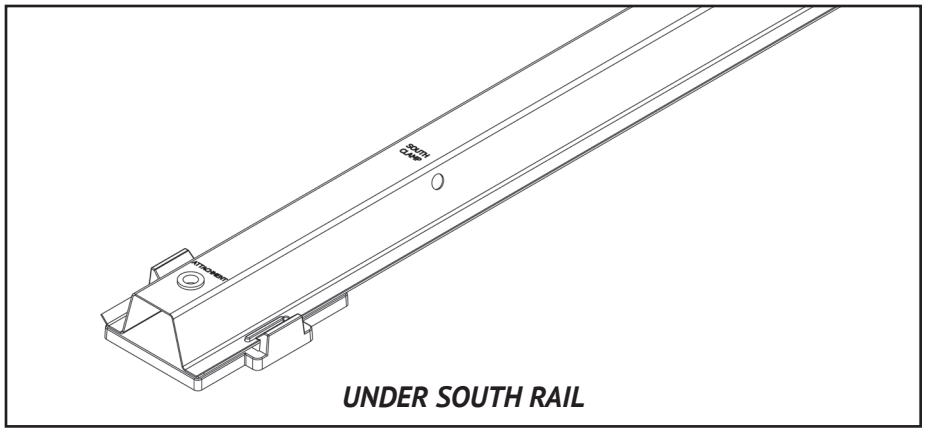

UNDER SOUTH RAIL

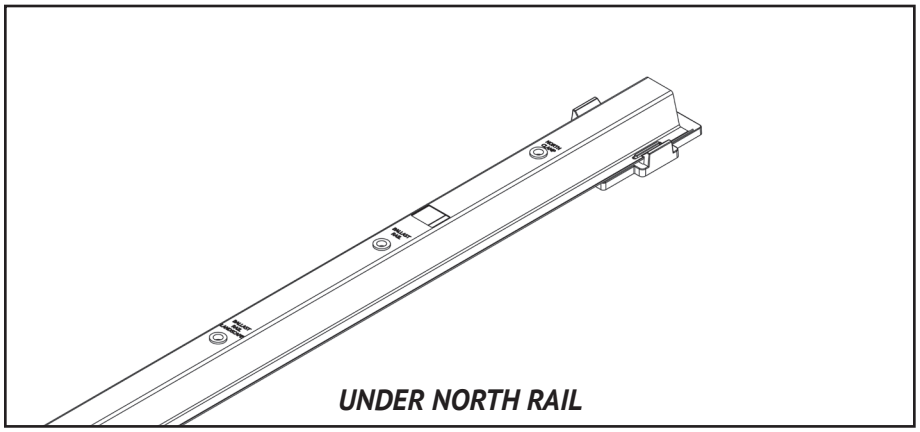

UNDER NORTH RAIL

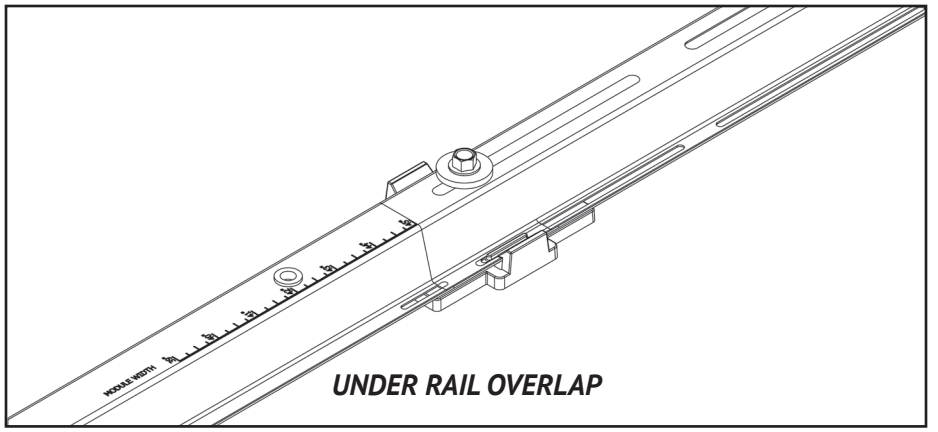

UNDER RAIL OVERLAP

ROOF PADS INSTALLATION AT ROOF UNDULATIONS

- When roof undulations occur at Base Rail locations, place a stack of Roof Pads beneath the Base Rail to provide support.
- Do not stack more than three (3) Roof Pads at any location.

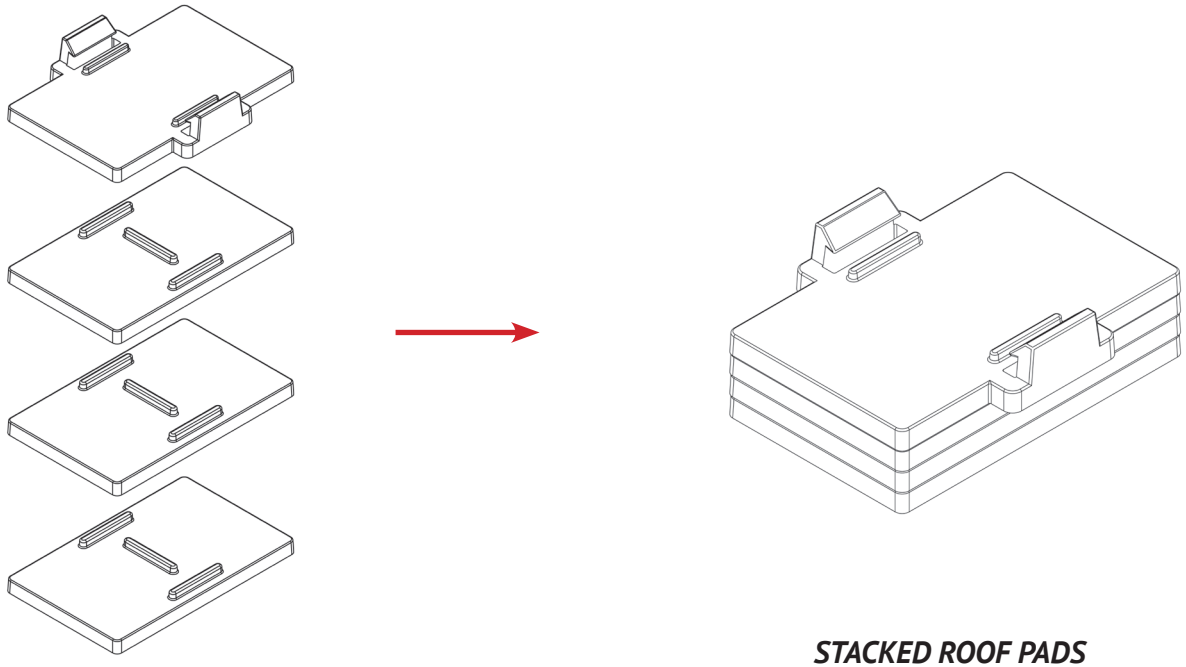

STACKED ROOF PADS

STEP 6: ATTACH SOUTH CLAMP

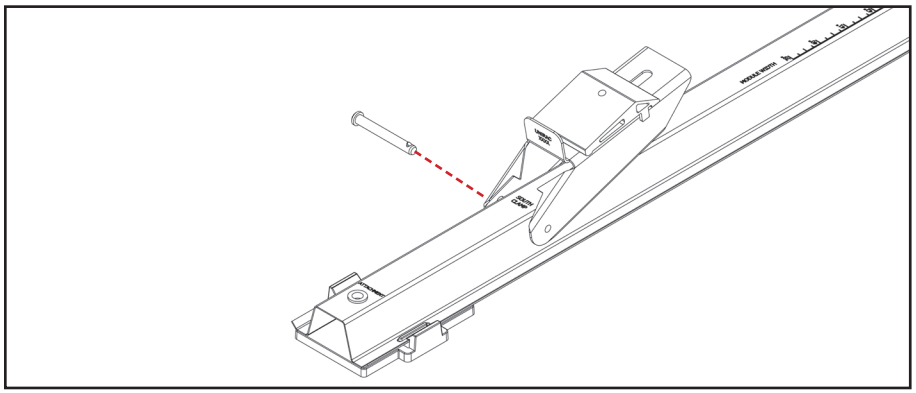

- Place the south clamp at the specified location on the base rail.
- Align holes in the south clamp with the side holes of rail and insert a clevis pin (from either direction).
- Rotate the south clamp to vertical.

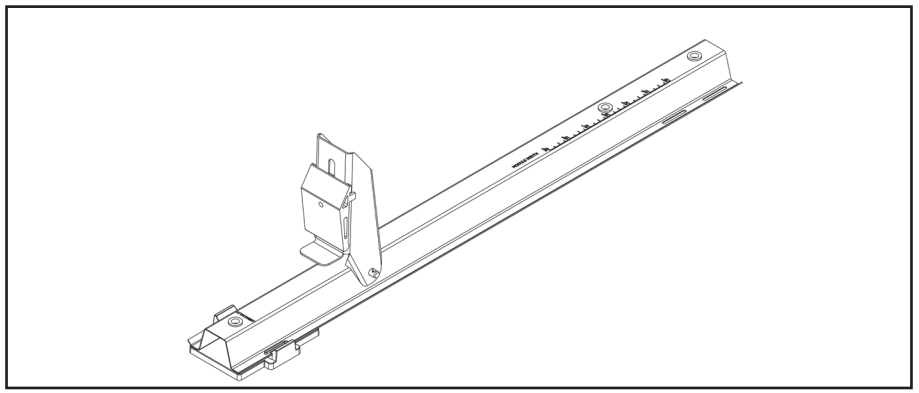

- Rotate the south clamp to vertical.

⚠ CAUTION

Ensure Clevis Pin is fully inserted.

STEP 7: ATTACH NORTH CLAMP:

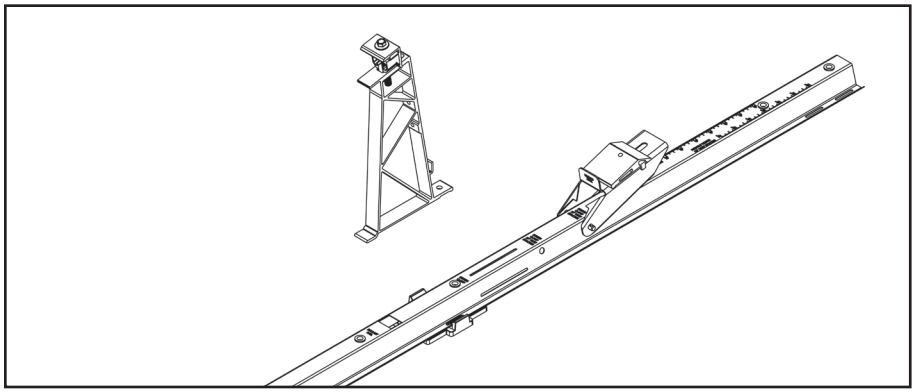

- Insert the front tab of the North Clamp into the slot on the base rail at the specified location.

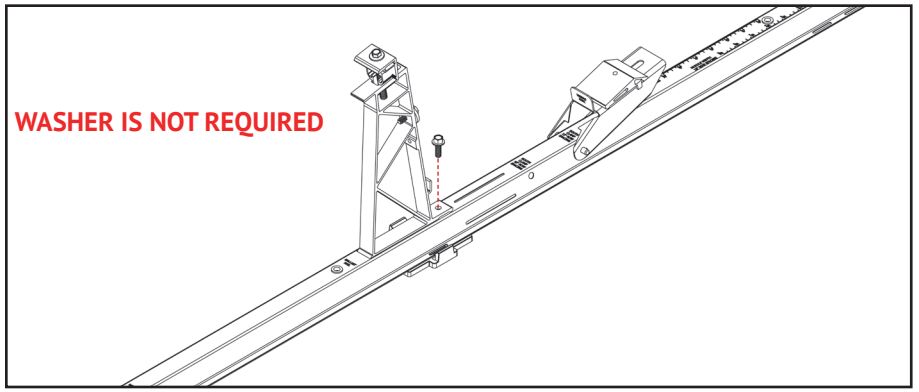

- Secure with a $^{1}/_{4}$-20 hex head bolt through the rear hole into the riv-nut

Torque value – 12 ft-lbs

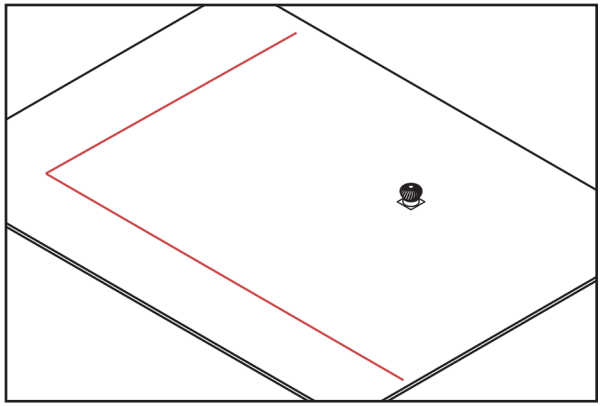

STEP 1: MARK ARRAY LAYOUT ON ROOF:

- Use chalk line to mark distances from roof edge as called out in construction documents.

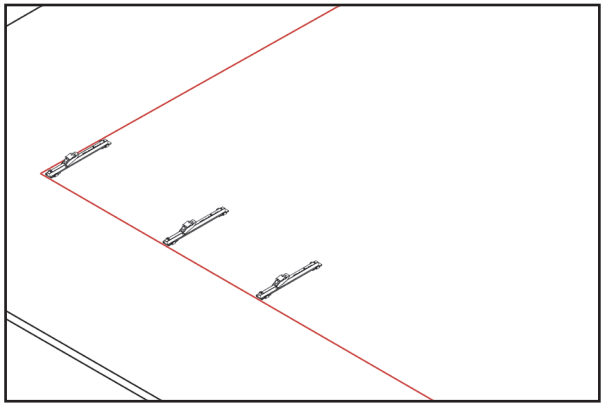

STEP 2: LOCATE ARRAY ON ROOF:

- Place south rails on previous chalk lines.

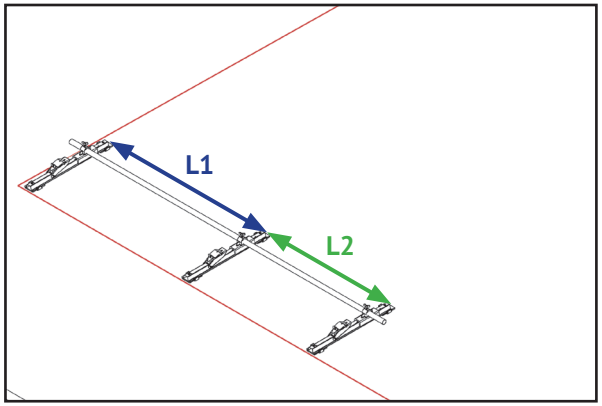

STEP 2: LOCATE ARRAY ON ROOF (CONT.):

- Place the south rails at the L1 and L2 rail spans using the GridFlex Spacer Jig.
- Continue the process to place all south rails in the array.

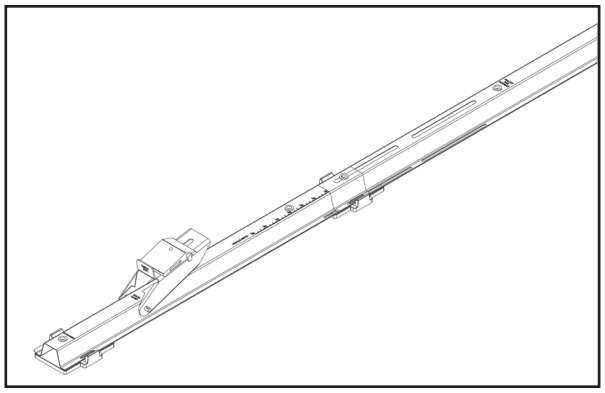

STEP 3: ATTACH MID RAIL TO SOUTH RAIL:
Overlap Mid-Rails on top of South Rails, use the measurement scale printed on the rail to determine the overlap length. Match the value on scale to the module width.

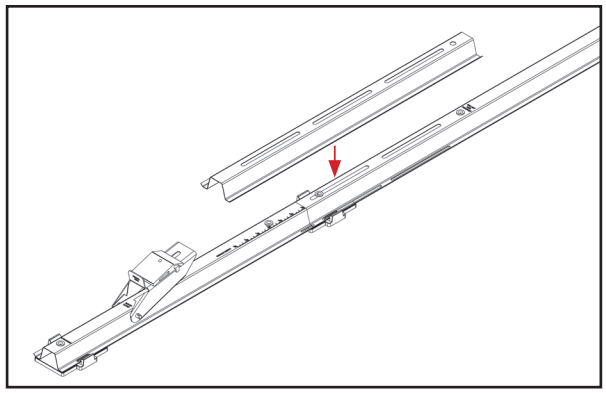

STEP 4: ATTACH STIFFENER TO MID RAIL & SOUTH RAIL ASSEMBLY:

- Place the stiffener over both the mid and south rails, ensuring the hole in the stiffener aligns with the hole in the mid rail labeled 'Ballast Rail Portrait.

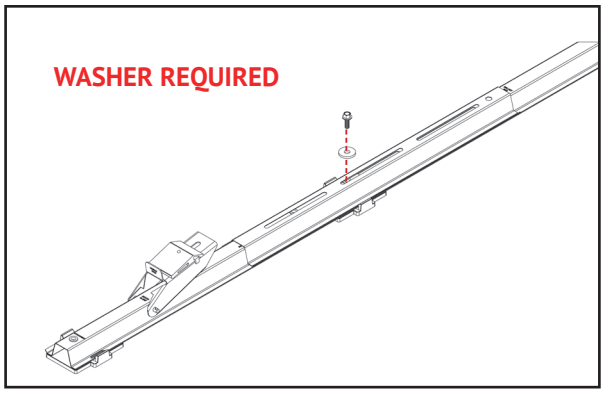

STEP 5: SECURE MID RAIL TO SOUTH RAIL:

- Insert a $^{1}/_{4}$-20 hex bolt with a flat washer through the slot in the stiffener and into the riv-nut on the south rail.

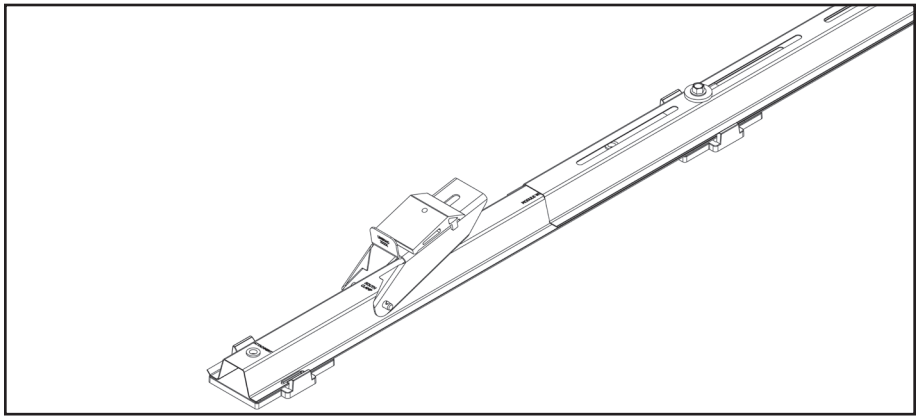

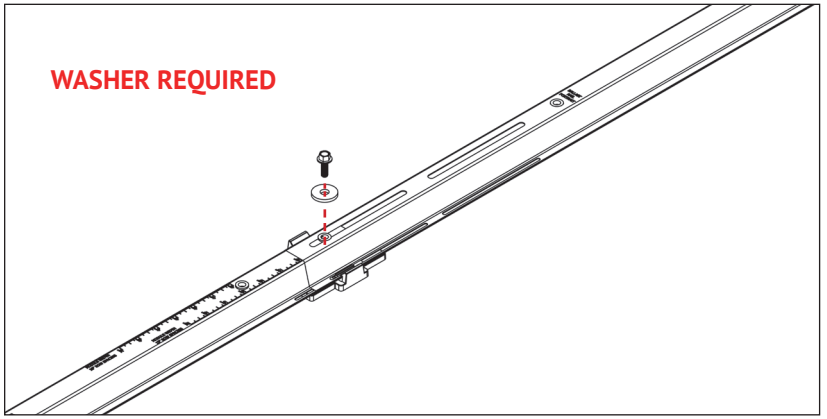

STEP 5: ATTACH MID RAIL TO SOUTH RAIL (CONT.):

Torque $^1/_4$-20 hex bolt to 12 ft-lbs

NOTE: Stiffener is not needed for base rails with mechanical attachments

STEP 6: ATTACH MID-RAIL TO MID-RAIL/ MID-RAIL TO NORTH-RAIL :

- Overlap next rail (Mid or North) on top of rail laid on roof, use the measurement scale **(10", 13" or 17" row spacing)** printed on the rail to determine the overlap length.
- Match the value on scale to the module width.
- Insert $^1/_4$-20 hex bolt with flat washer into riv-nut and secure the rails.

Torque value – 12 ft-lbs

NOTE: Different SKUs are available for 10"/13" and 17" row spacing.

In STEP 5 and STEP 6

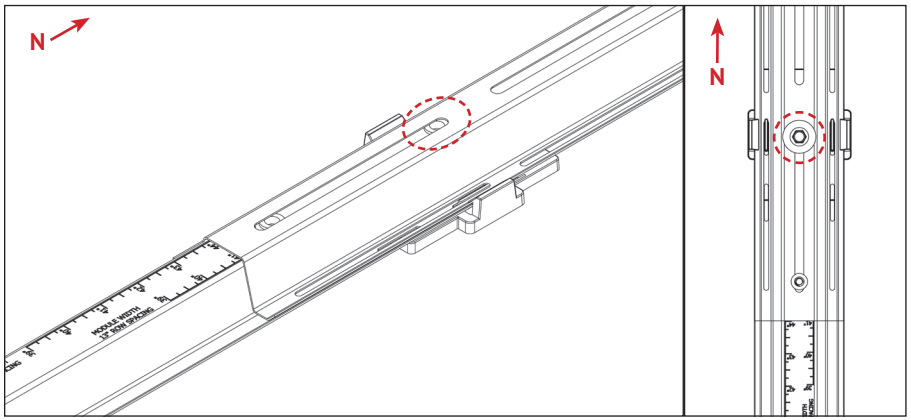

- If two riv-nuts are showing in the rail slots, secure the rails to the riv-nut that is closer to the North side.

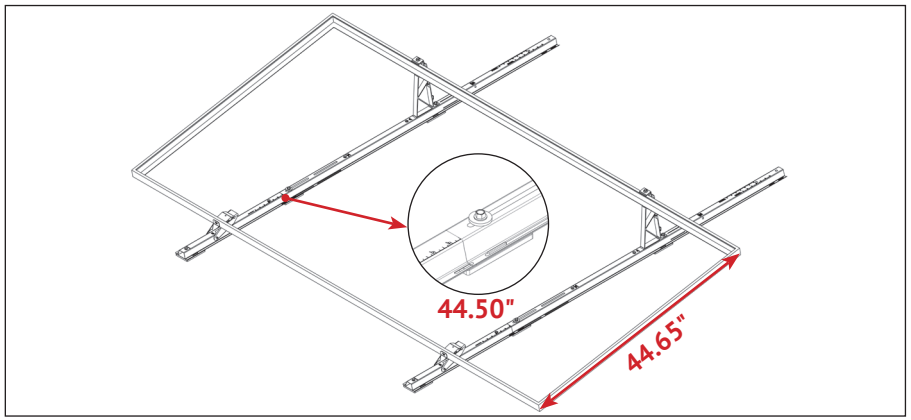

- For modules that do not measure to 1/4" increments, round down to the next 1/4" mark.
- For example, If module width is 44.65" overlap base rails at 44.50".

STEP 7: BALLAST RAILS INSTALLATION (NORTH-SIDE OF BALLAST BLOCK):

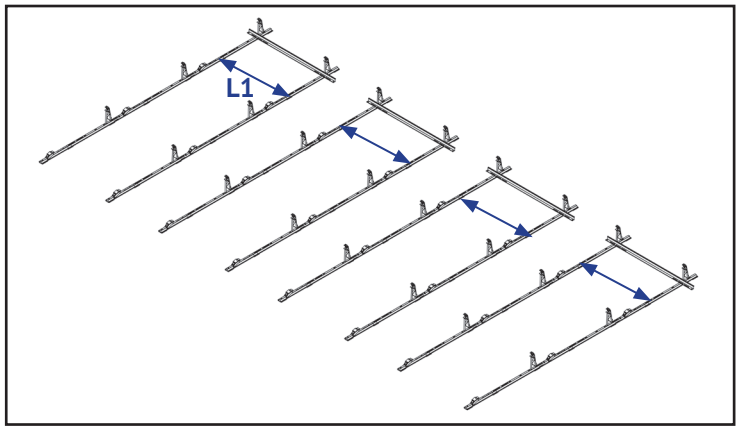

- Place the ballast rails at L1 span locations at array edges

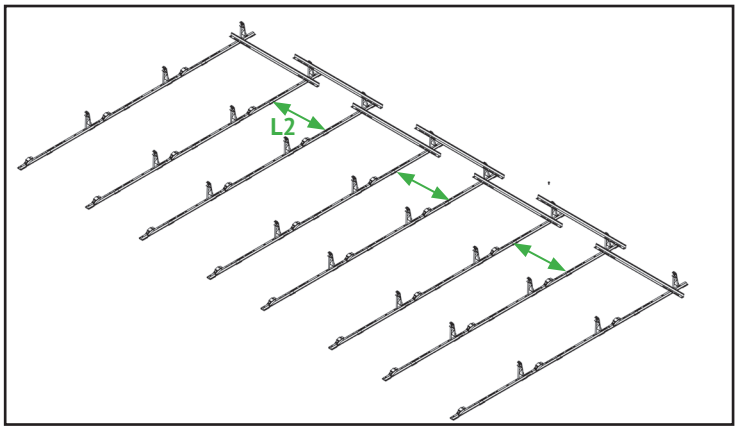

- Then place the ballast rails at L2 span locations.
- Align the slots in the ballast rails with the holes on the base rail.

IMPORTANT : Ensure L2 ballast rails are placed on top of L1 ballast rails.

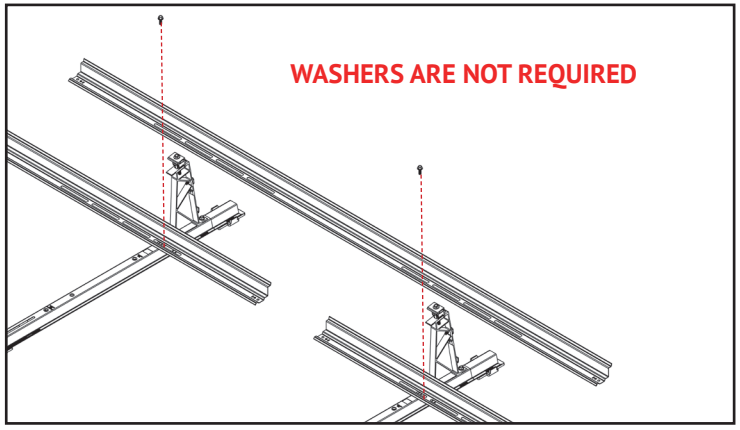

- Secure the ballast rail to the mid/north rails with a $^{1}/_{4}$-20 hex head bolt at a specified location to place ballast blocks in Portrait orientation.

Torque value – 12 ft-lbs

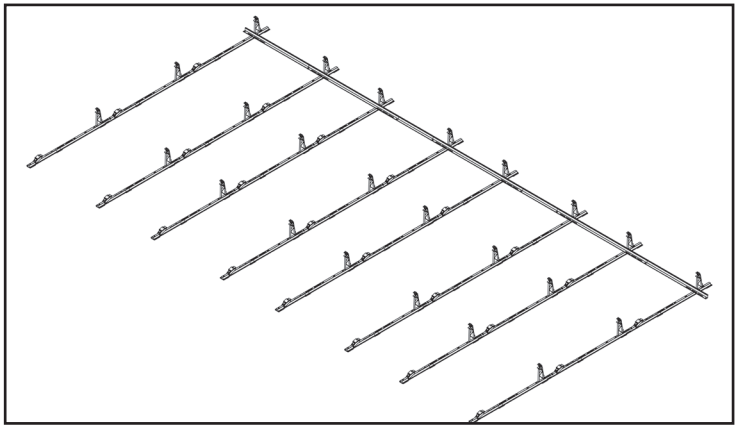

NOTE
Always install Steel Ballast Rails (380302-US) on the north side of the ballast block.

STEP 8: BALLAST RAILS INSTALLATION (SOUTH-SIDE OF BALLAST BLOCK):

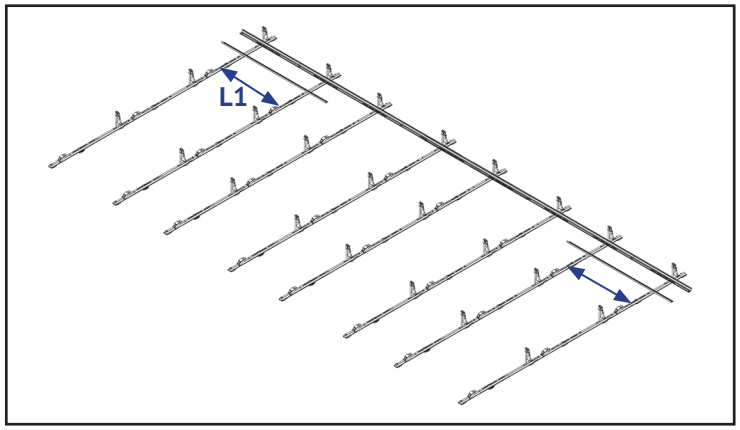

- Place the ballast rails at L1 span locations at array edges

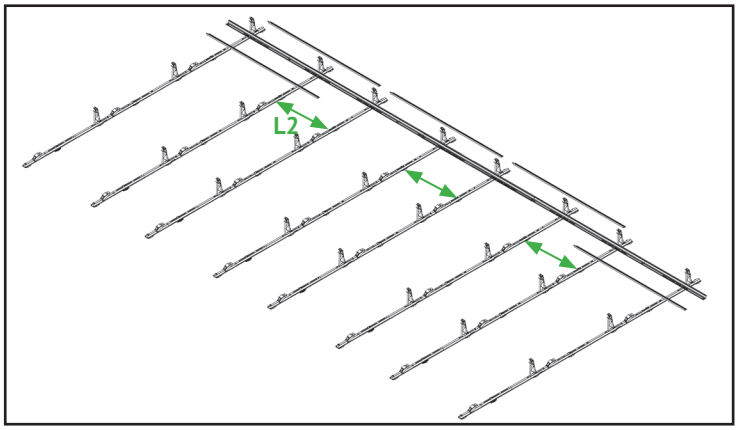

- Then place the ballast rails at L2 span locations.
- Align the slots in the ballast rails with the holes on the base rail.

IMPORTANT : Ensure L2 ballast rails are placed on top of L1 ballast rails.

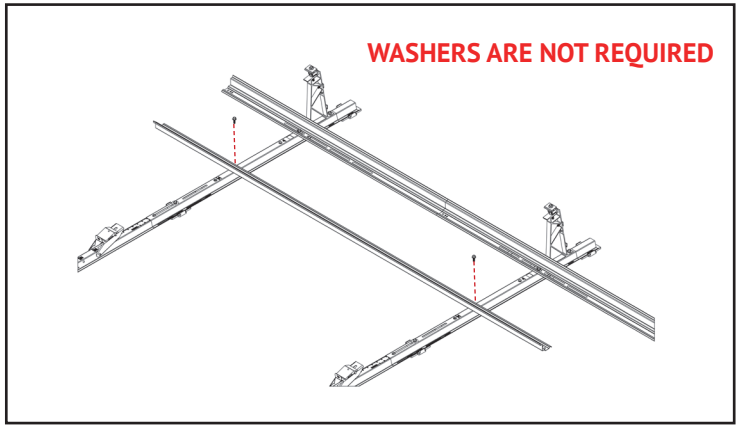

- Secure the ballast rail to the mid/north rails with a $^{1}/_{4}$-20 hex head bolt at a specified location to place ballast blocks in Portrait orientation.

Torque value – 12 ft-lbs

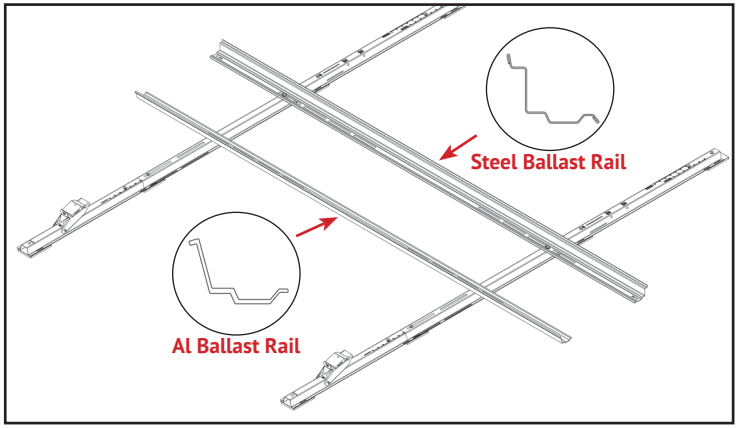

NOTE
If the construction drawings include the aluminum ballast rails (380305-US), install them at the south ballast rails position.

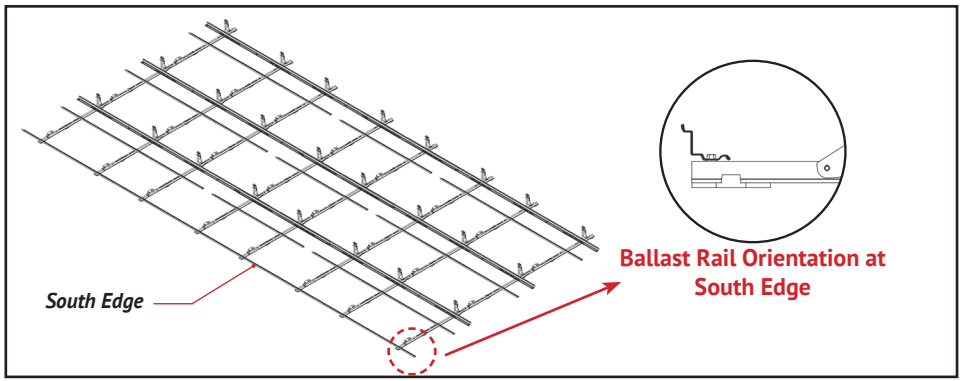

STEP 9: BALLAST RAILS INSTALLATION (SOUTH EDGE OF ARRAY):

- Follow **STEP 7** to install ballast rails on the south edge of the array.

Note:

Always use Steel ballast rails (380302-US) at the south edge of the array.

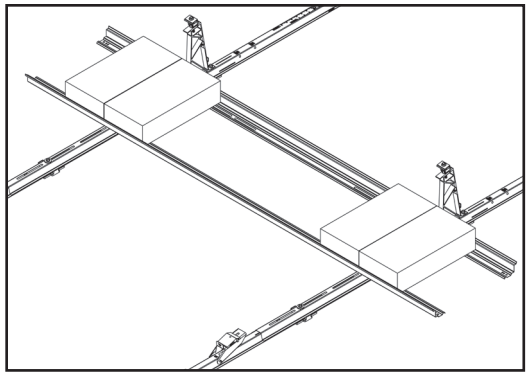

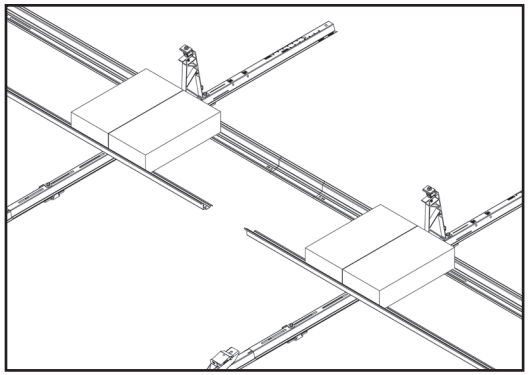

STEP 10: LAY BALLAST BLOCKS:

- Lay ballast blocks into ballast rails and quantity of blocks to be placed should be as per engineering report or U-Builder report.
- Ballast block placement for a given number of blocks - See pages ***16 & 17***

BALLAST BLOCKS CONFIGURATIONS AT EAST -WEST EDGES

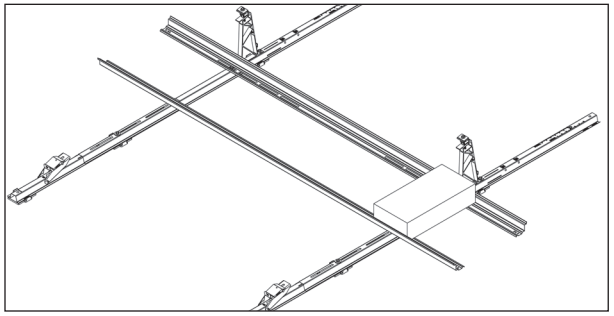

1-Block Configuration

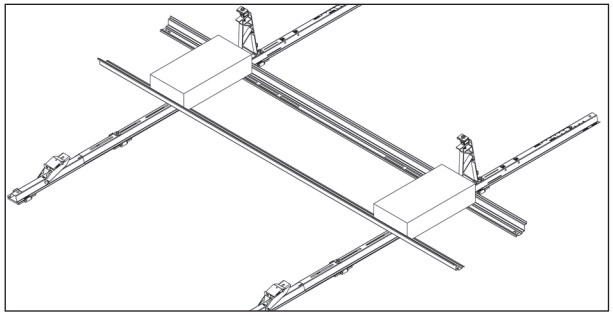

2-Block Configuration

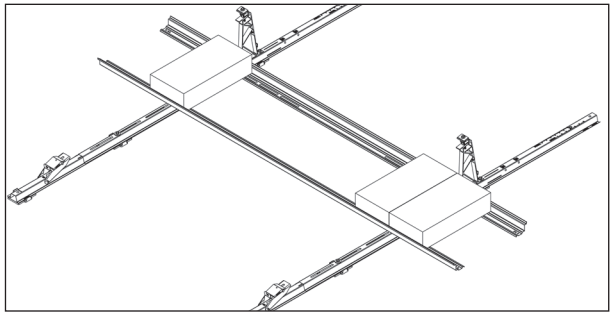

3-Block Configuration

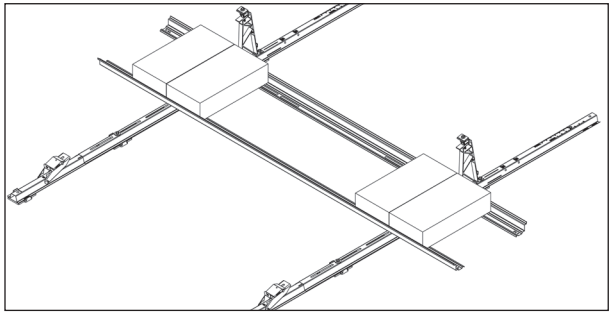

4-Block Configuration

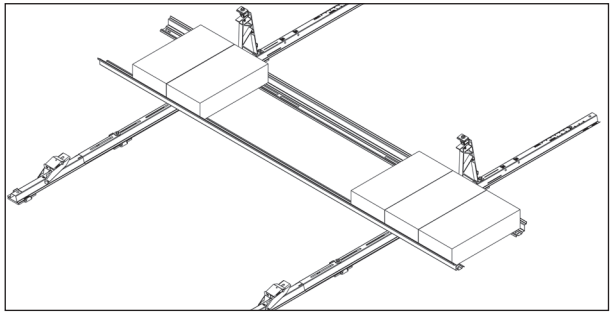

5-Block Configuration

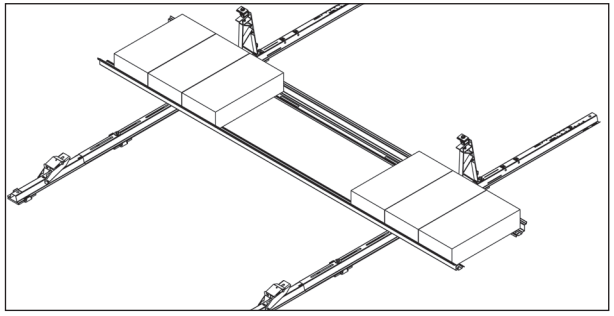

6-Block Configuration

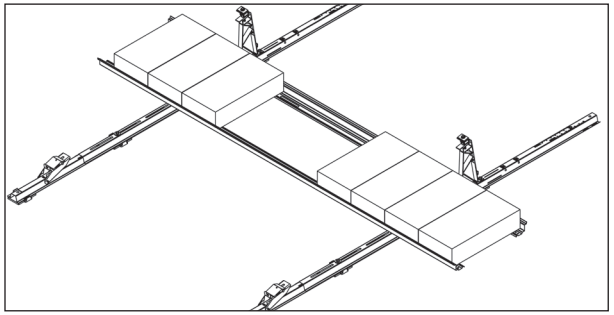

7-Block Configuration

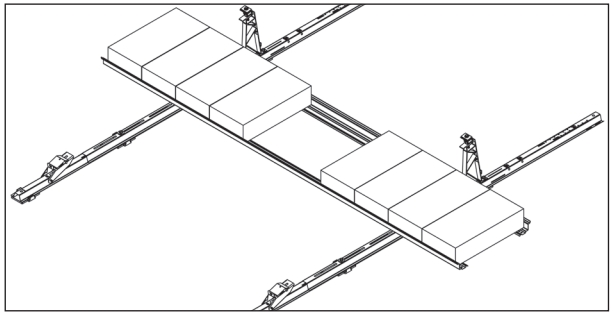

8-Block Configuration

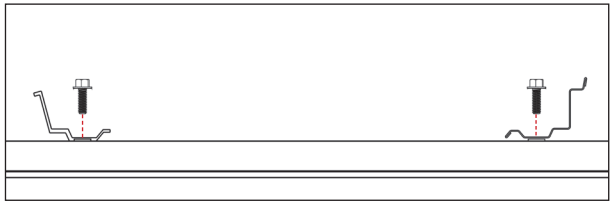

NOTE:
Ballast blocks are concentrated around the base rails. For an odd number of ballast blocks, place higher number of ballast blocks closer to array edge.

BALLAST BLOCKS CONFIGURATIONS AT L2 SPANS

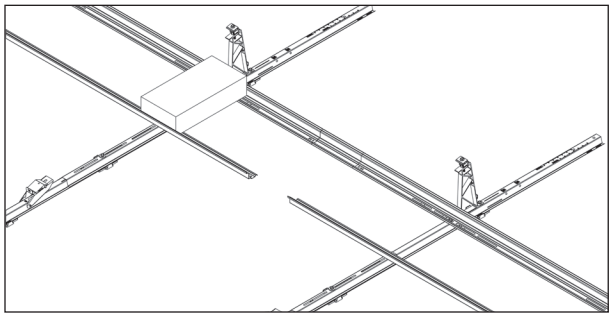

1-Block Configuration

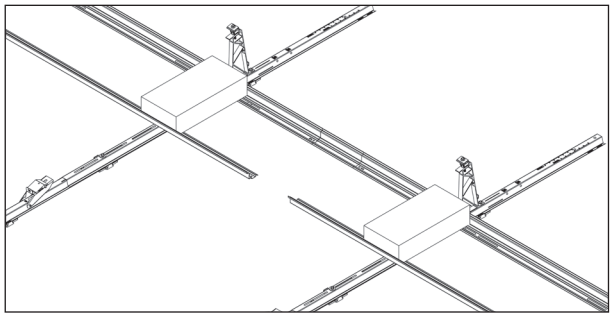

2-Block Configuration

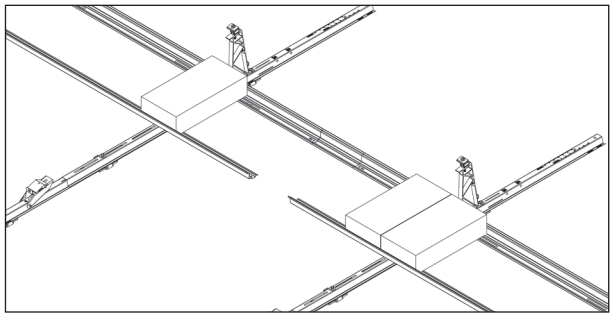

3-Block Configuration

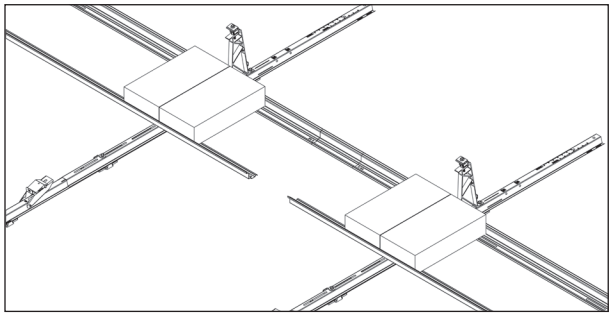

4-Block Configuration

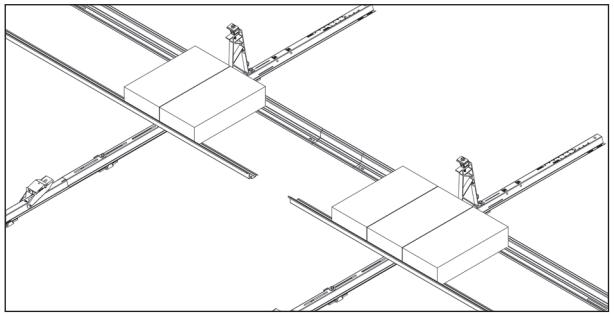

5-Block Configuration

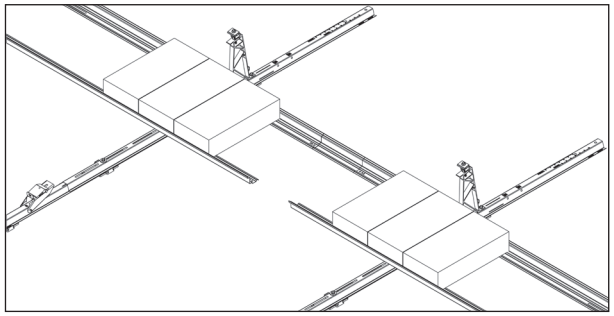

6-Block Configuration

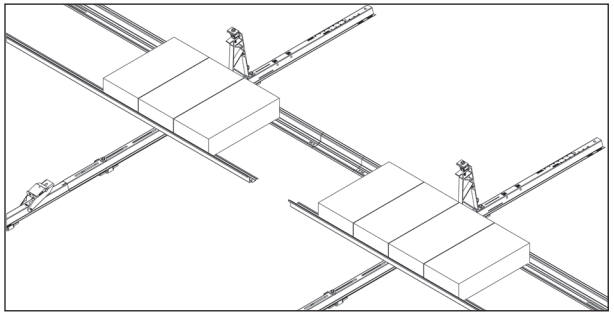

7-Block Configuration

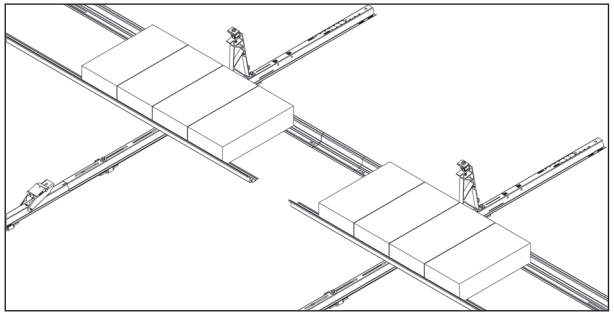

8-Block Configuration

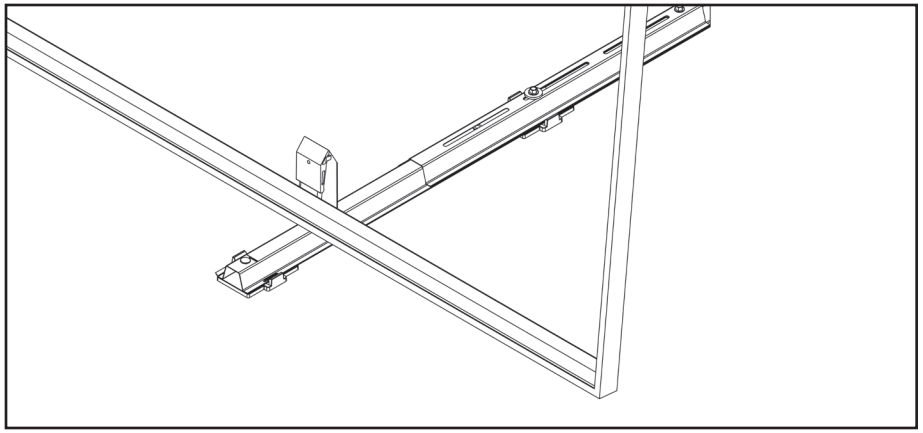

STEP 11:
Place module at South Clamps.

NOTE: To maintain the fire rating, orient the module J-Box away from the array east and west edges.

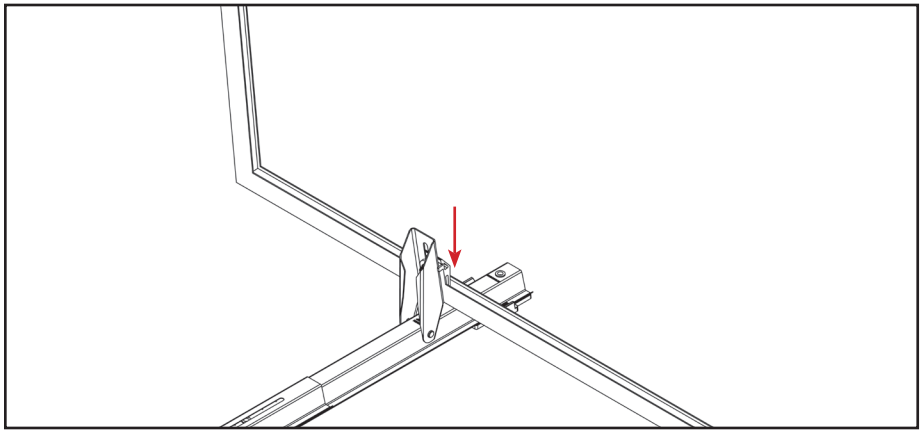

STEP 12:
Push sliders down to fully engage module flange and tighten the bolt.

Torque the bolt to 12 ft lbs

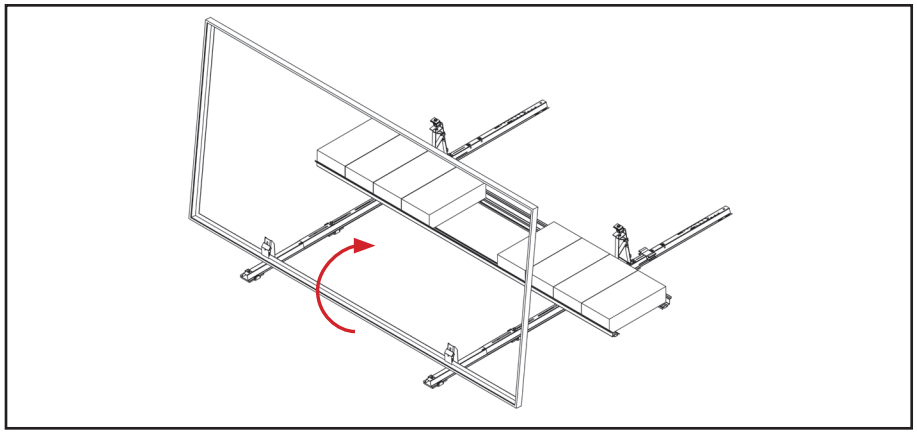

STEP 13:
Rotate the module downward and position it on the north stanchions.

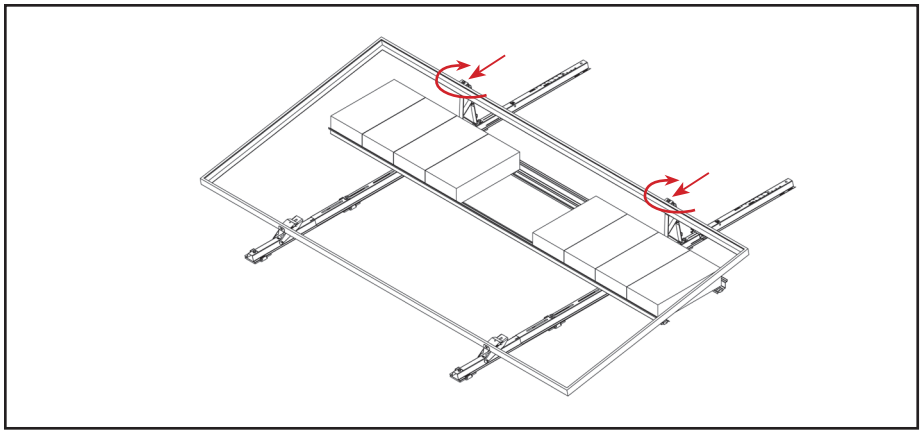

STEP 14:
Slide the north clamps onto the module and tighten the bolts.

Torque the bolt to 12 ft-lbs.

Complete modules installation by repeating STEP 12 to STEP 15.

NOTE: Ensure clamps are fully seated against the module.

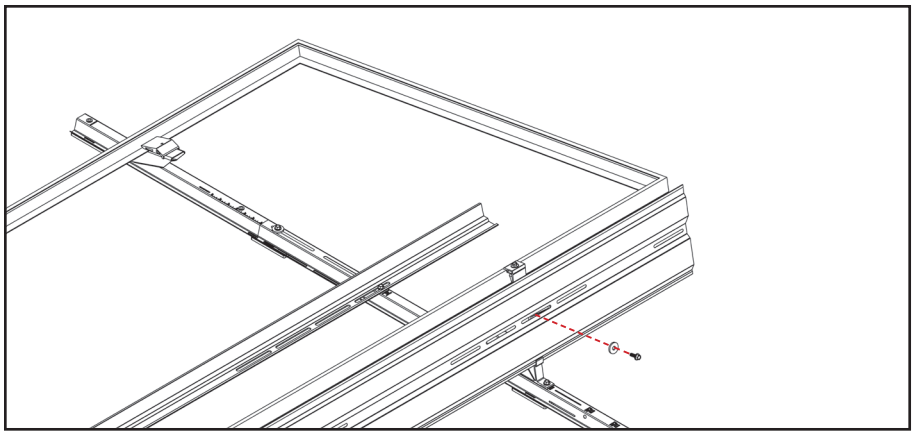

STEP 15: INSTALL WIND DEFLECTOR

- Position the wind deflector in the tab of the north stanchion.
- Align the wind deflector with the module end and slots of the north stanchion holes.

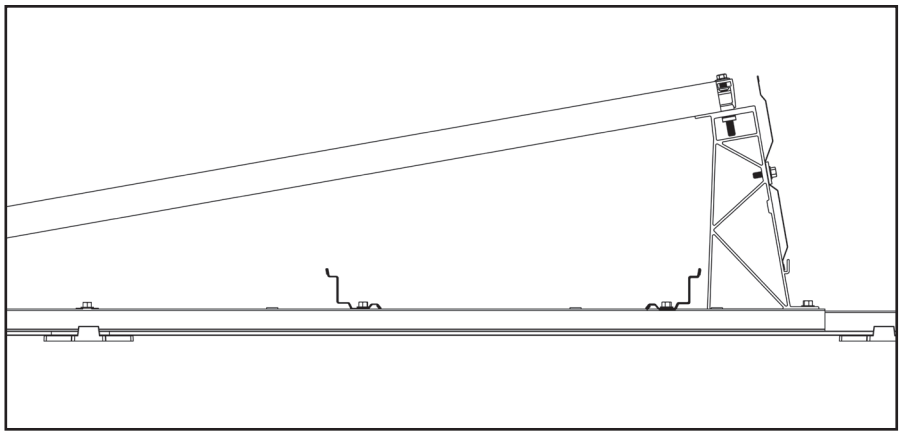

STEP 16:

Secure wind deflector to north stanchion with a $^{1}/_{4}$-20 hex head bolt and washer.

Torque the bolt to 12 ft-lbs.

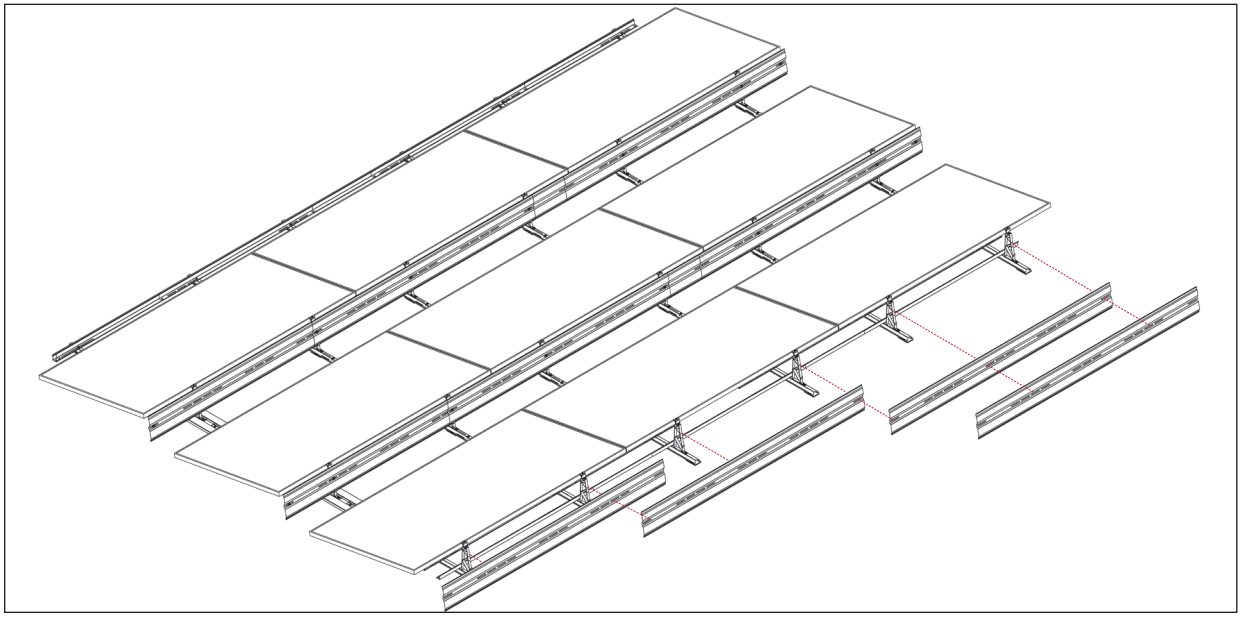

NOTE

A row of "n" modules requires "n+1" wind deflectors"

⚠ CAUTION

Ensure that each wind deflector is attached to three north stanchions, while the east and west edge wind deflectors are attached to only two north stanchions.

⚠ CAUTION

Install wind deflectors immediately after modules are installed. Failure to do so may result in system instability or damage during high wind conditions.

STEP 17: WIND DEFLECTOR BRACKET INSTALLATION

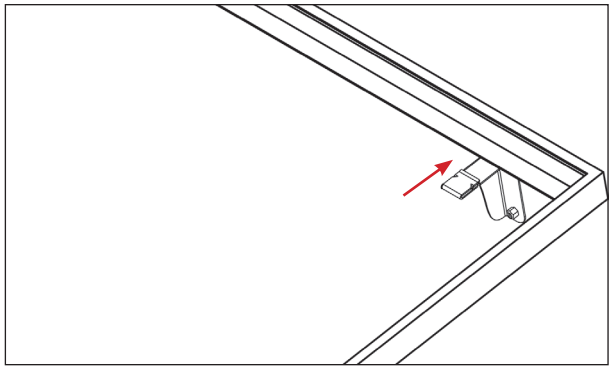

Position bracket within 3" of module edge and pull it to engage with module's return flange. .

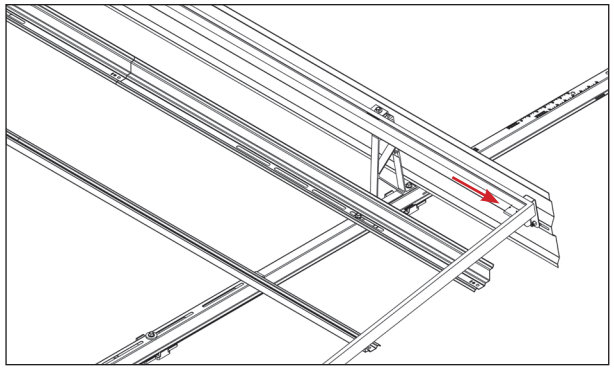

Secure the bracket to the wind deflector with a $^{1}/_{4}$-20 hex head bolt and washer.

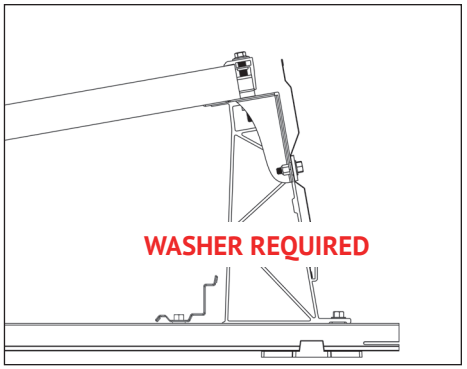

Torque the bolt to 12 ft-lbs.

NOTE: Wind deflector brackets are installed only at the east and west edges of the array.

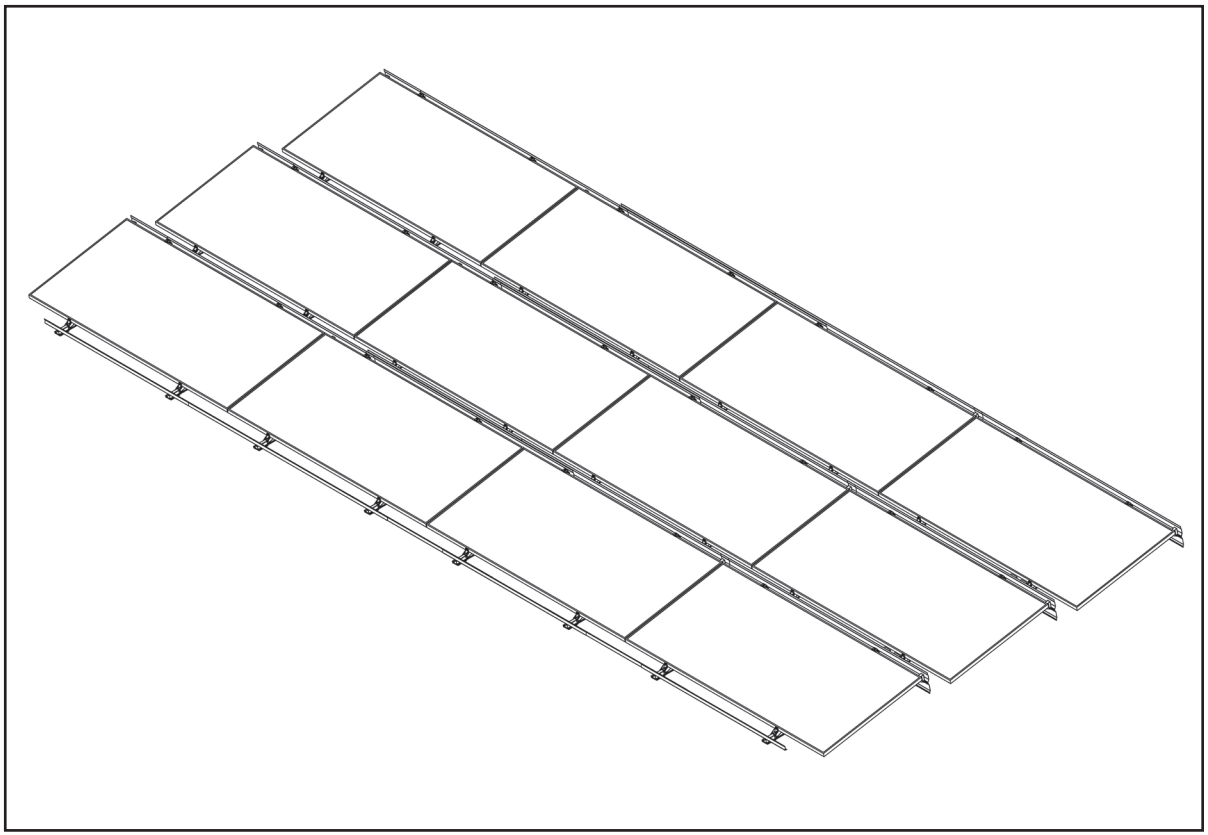

STEP 18:
Verify that all fasteners are tightened to the **12 ft-lbs** torque.

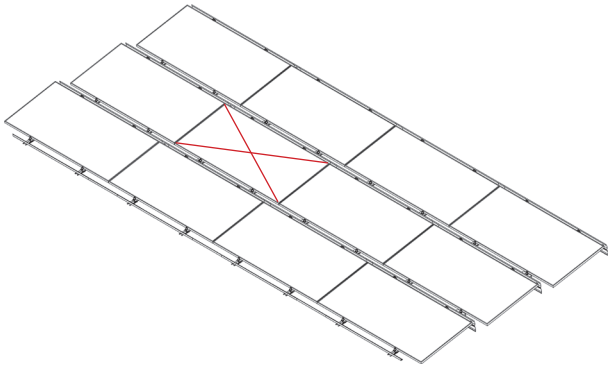

STEP 1: Locate the module to be replaced. Loosen the hexagonal bolt in both the north stanchion's clamp to which the module is connected.

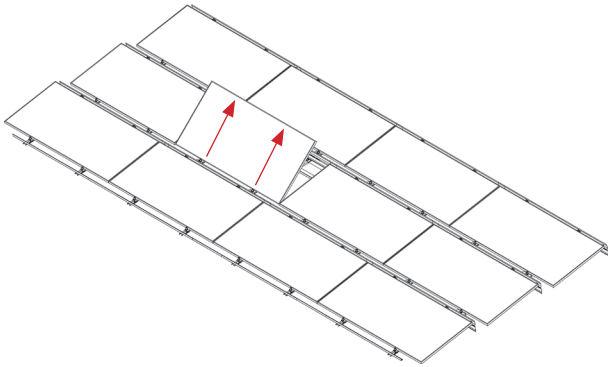

STEP 2: Now lift the module from north edge and rotate it to vertical towards the south.
Loosen the bolt in the south clamp.

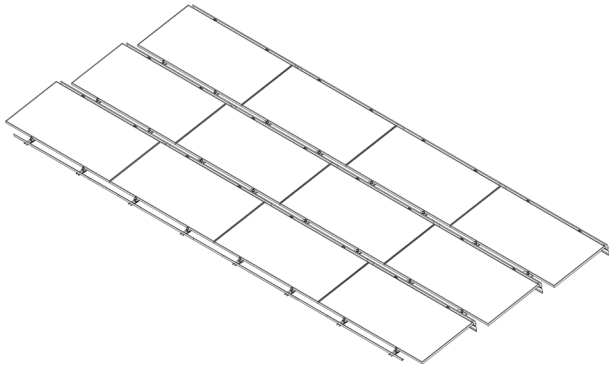

STEP 3: Remove the module and re install the new module by following steps mentioned on ***page 18***.

IMPORTANT:
Unirac recommends periodic re-inspection of the installation for loose components, loose fasteners, and any corrosion, such that if found, the affected components are to be immediately re-tightened or replaced.

INSTALL WIRE MANAGEMENT CLIP

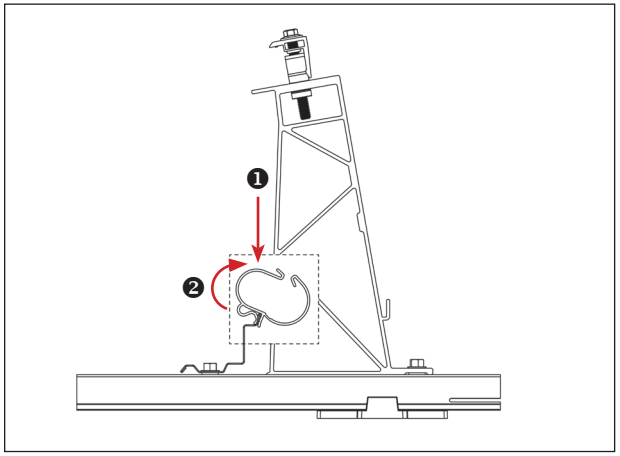

- Place the wire management clip on the ballast rail and press it to engage.

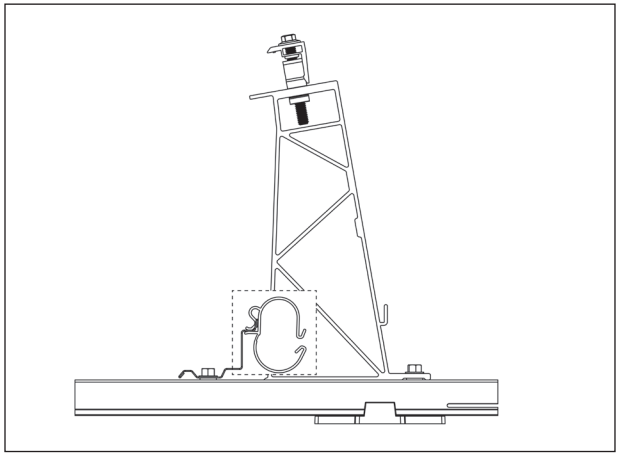

- Rotate the wire management clip to secure it to the ballast rail.

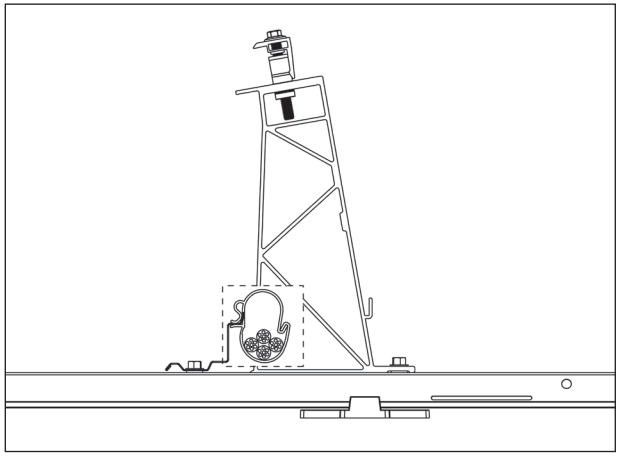

- Ensure the clip is fully locked after placing all wires into the clip.

INSTALL HOMERUN WIRE MANAGEMENT COVER

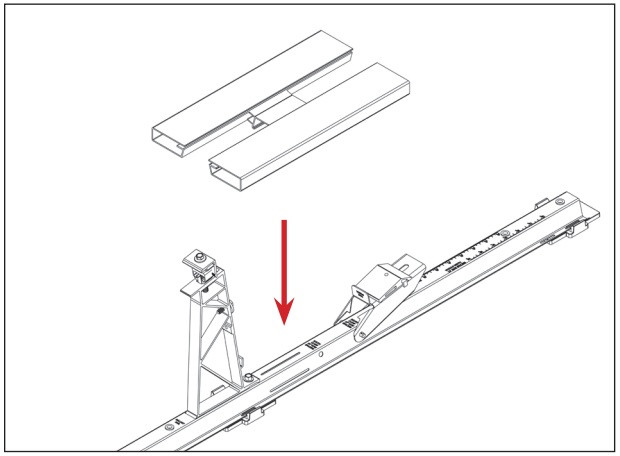

- Place the Homerun cover over the mid-rail.

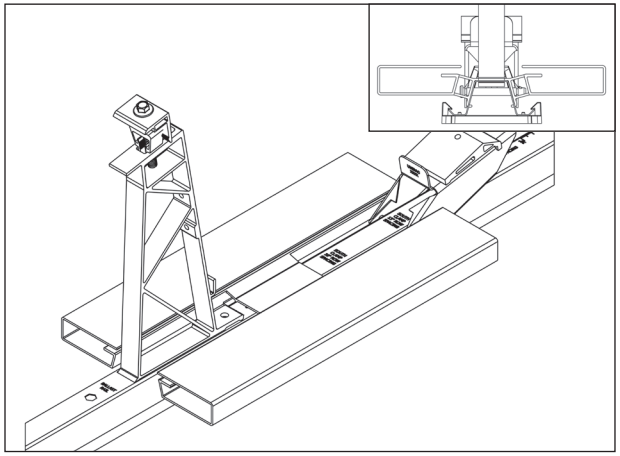

- Press down until the tabs engage with the side slots of the mid-rail.

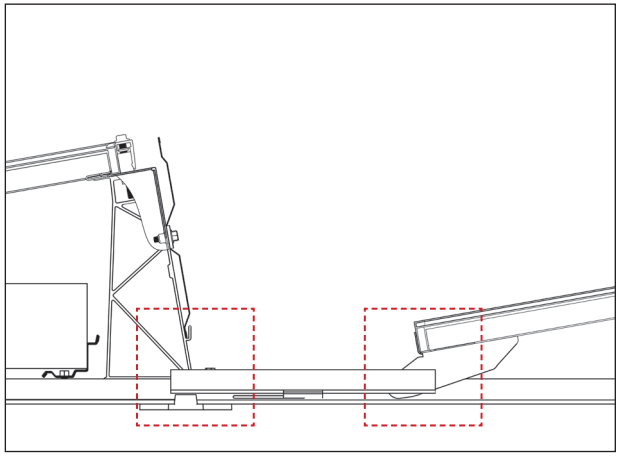

NOTE: Ensure the Homerun Wire Management Cover extends beneath the module edge on the north end and beneath the wind deflector on the south end.

⚠ CAUTION

- **Events such as high winds and seismic activity may cause array movement and displace wire management components. Inspect all wire management components after such events or at a minimum interval of 5 years and immediately reposition or replace any displaced or damaged components.**

GROUNDING LUG MOUNTING DETAILS AS REQUIRED BY CODE & ENGINEER OF RECORD: The Ilsco lug has a green colored set screw for grounding indication purposes. One lug is recommended per continuous array, not to exceed 150ft X 150ft.
Unirac GridFlex 10 is intended to be used with PV modules that have a system voltage less than or equal to that allowable by the National Electric Code (NEC). It is the installer's responsibility to check adherence to local codes.

NOTE: The installation must be conducted in accordance with the National Electric Code ANSI / NFPA 70.

GROUND LUG	BOLT SIZE	TORQUE VALUE
Ilsco Lug SGB-4	1/4" - 20	6.5ft-lbs (75 in-lbs)
Ilsco Lug GBL-4	#10 - 32	2.9ft-lbs (35 in-lbs)
Wiley 6.7	1/4" - 20	10ft-lbs (120 in-lbs)

NOTE: In order to prevent corrosion induced by dissimilar metals, it is important to verify that the bare copper wire does not come into contact with aluminum or galvanized steel. These metals must be kept separate.

Although conformance with UL2703 was demonstrated without the use of oxide inhibitor material, it is recommended by Ilsco.

Ilsco SGB.4 Solar Grounding & Bonding



TERMINAL TORQUE:
Install conductor and torque to the following: **4-14 AWG: 35 in-lbs**

Ilsco GBL-4 Solar Grounding & Bonding



TERMINAL TORQUE:
Install conductor and torque to the following: **4-6 AWG: 35 in-lbs, 8 AWG: 25 in-lbs**

Wiley WEWB-Lug 6.7 Solar Grounding & Bonding

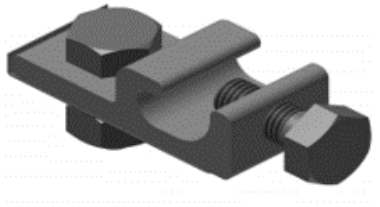

TERMINAL TORQUE:
Install conductor and torque to the following: **4-6 AWG: 10 ft-lbs, 6-14 AWG: 7 ft-lbs**

All Lugs in this page are rated for Single Use Only.

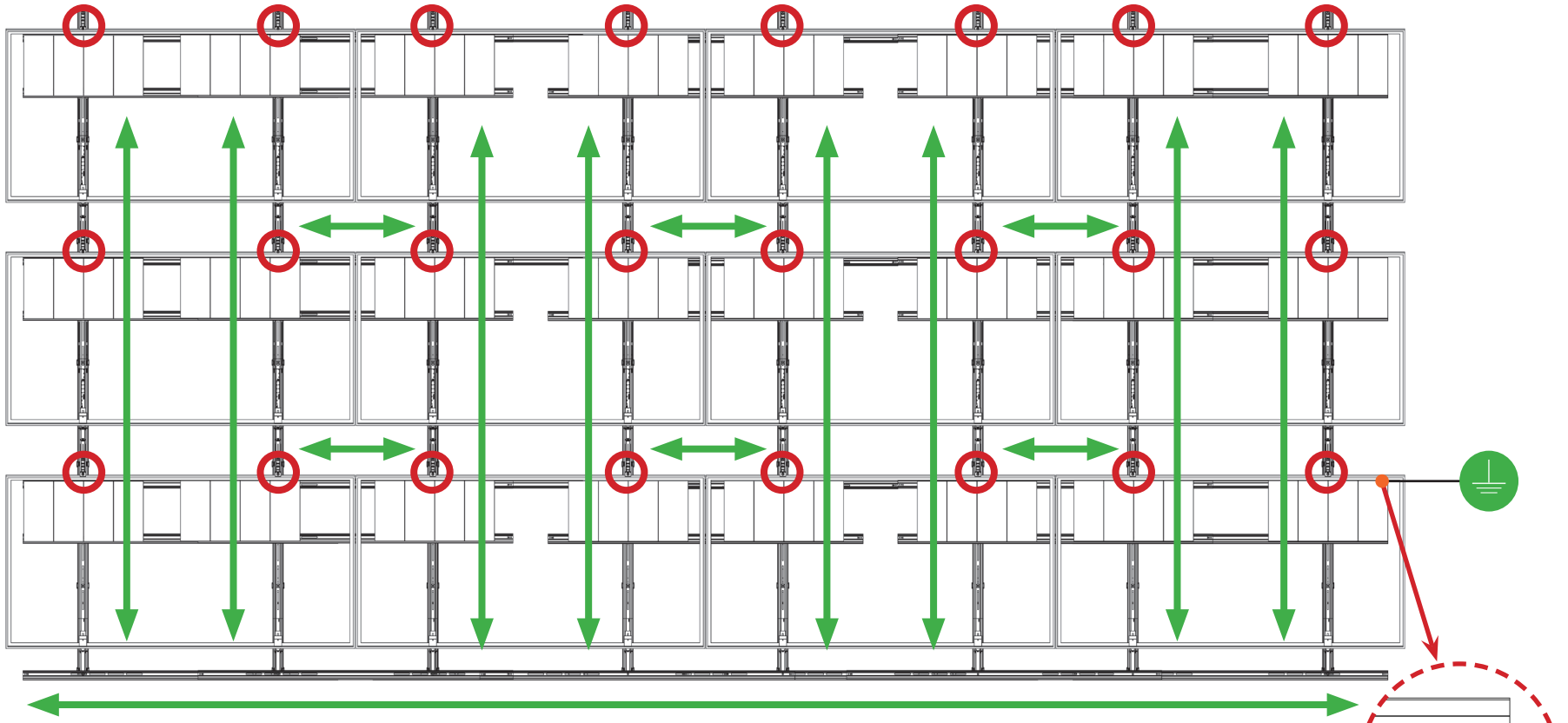

Bonding Clamp

Grounding Lug

Min. 10AWG, 105°C Copper Wire

Grounding location on Ballast Rail

NOTE: Grounding path can be established by installing the ground lug and copper wire connection at specified locations on ballast rails

SYSTEM LEVEL FIRE CLASSIFICATION: The system fire class rating is only valid when the installation is conducted in accordance with the assembly instructions contained in this manual over a fire resistant roof covering rated for the application. GridFlex 10 has been classified to the system level fire portion of UL2703. It has achieved Class A performance for low sloped roofs when used in conjunction with type 1, 2, 3 with a metal frame, 19, 22, 25, 29 and 30 module constructions. Please see the specific conditions for mounting details described within this document required to maintain the Class A fire rating. Minimum and maximum roof slopes are restricted through the system design and layout rules. The fire classification rating is only valid on roof pitches less than 2:12 (slopes < 2 inches per foot, or 9.5 degrees).

IMPORTANT: Wind Deflectors are required throughout the array to maintain Class A fire rating.

NOTE: Fire Type information can be found on back of modules or through manufacturers documentation. Some building codes and fire codes require minimum clearances around PV racking installations, and the installer should check local building code requirements for compliance.

CLASS A FIRE RATING MOUNTING ORIENTATION

GridFlex 10 has achieved Class A system level fire performance for type 1, 2, 3 with a metal frame, 19, 22, 25, 29 and 30 module constructions. In order to maintain the fire rating, the module J-Box must be oriented away from the array east-west edges.

UL2703 System Label: To comply with UL2703 system rating, North rail has a stamp of system label as shown below



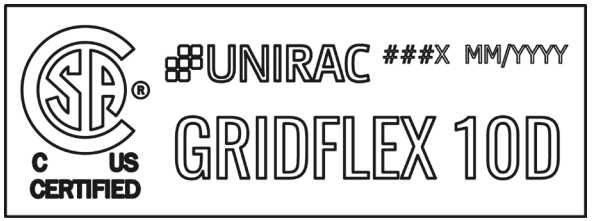



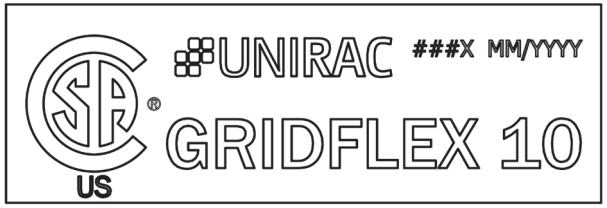

###X - Vendor ID
MM/YYYY - Month and Year of Manufacturing

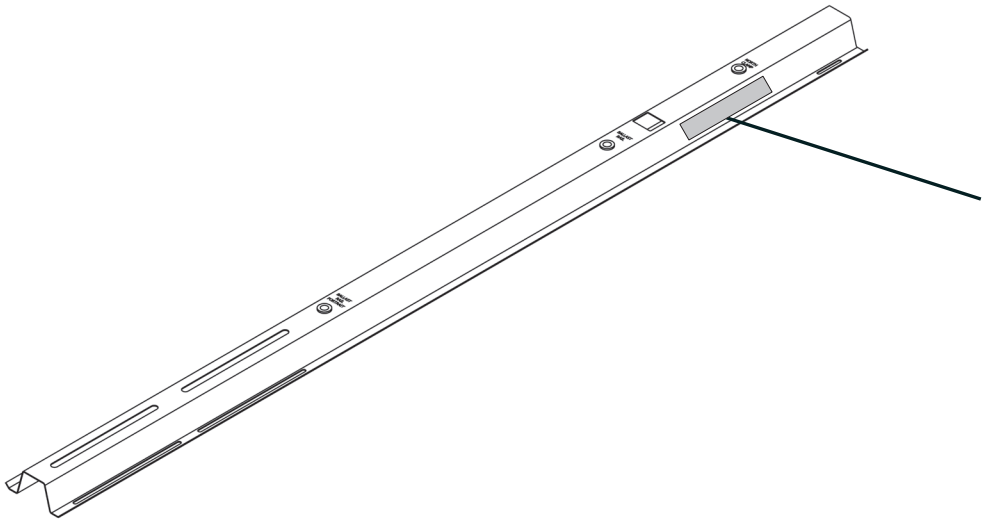

Note: North Rail has a system label at the location shown in the diagram.

MECHANICAL LOAD TEST QUALIFICATION

The GridFlex 10 system has been tested to the mechanical load provisions of UL2703 and covers the following basic parameters:

- PV module may have reduced load rating, independent of the GridFlex 10 rating. Please consult the PV module manufacturer's installation guide for more information.
- Load rating may vary based on PV module area. Please Contact Unirac for more information

See the table below for UL 23703 system design loads in the up, down, and downslope directions for the various system installation configurations

Module Manufacturer	Model	Module Area (sq ft)	Downward Design Load (psf)	Upward Design Load (psf) Non-South Row Modules & South Row Modules with Either Ballasting or Mechanical Attachment South of the South Row Modules	Upward Design Load (psf) South Row Modules with South Rail Stiffener	Downslope Design Load (psf)
Jinko	JKMxxxM-72HL4-TV	27.76	50.48	31.01	10.03	8.93
ZN Shine	ZXM8-TPLDD132	33.44	17.59	18.55	5.38	6.20
SunPower	SPR-P19-390-COM	22.2	60.12	38.57	#N/A	11.91

The following table lists the modules that have been mechanically load tested according to the CSA TIL NO. A-40 standard and UL 2703installation configurations

Module Manufacturer	Model	Module Area (sq ft)	Downward Design Load (psf)	Upward Design Load (psf) Non-South Row Modules & South Row Modules with Either Ballasting or Mechanical Attachment South of the South Row Modules	Downslope Design Load (psf)
Jinko	JKMxxxM-72HL4-TV	27.76	40.5	34.1	7.2

NOTE: Design loads are equal to tested loads with 1.5 safety factor applied.

Electrical Bonding and Grounding Test Modules

The list below is not exhaustive of compliant modules but shows those that have been evaluated and found to be electrically compatible with the GridFlex 10 system.

Manufacture	Module Model / Series
Aionrise	AION60G1 AION72G1
Aleo	P-Series S-Series
AMPS	AMPS-xxxN-108BB AMPS-xxxP-54BB
Aptos Solar	DNA-108-(MF/BF)10-xxxW DNA-108-MFN10-xxxW DNA-120-(MF/BF)10-xxxW DNA-120-(MF/BF)23 DNA-120-(MF/BF)26 DNA-120-MF10 DNA-144-(MF/BF)23 DNA-144-(MF/BF)26 DNA-144-BF10-xxxW-DG
Astronergy	CHSM6612 M, M/HV CHSM6612P/HV Series CHSM6612P Series CHSM66M(DG)/F-BH CHSM72M(DG)/F-BH (Fire Type 29 only) CHSM72M-HC CHSM72N(DG)/F-BH (Fire Type 29 only)
Auxin	AXN6M610T AXN6P610T AXN6M612T AXN6P612T AXNG1M SERIES
Axitec	AC-xxx(M/P)/60S AC-xxx(M/P)/72S AC-xxxMBT/144V AC-xxxMH/120(S/V/SB/VB)

Manufacture	Module Model / Series
Axitec (Cont.)	AC-xxxMH/144(S/V/SB/VB) AC-xxxP/156-60S AC-xxxTGB/108BB AC-xxxTGB/144TS AC-xxxTGB/144WS-US AC-xxxTGB/96BB
Bila Solar	AA550US-6x24GG
Bluesun Solar	BSMxxxM10-72HBD
Boviet Solar	BVM6610 BVM6612 BVM6612M-XXXS-H-HC-BF-DG BVM7612M-H-HC-BF-DG
BYD	MHK-36 Series P6K
Canadian Solar	CS1(H/K/U/Y)-MS CS3K-(MB/MB-AG/MS/P/P HE/PB-AG) CS3L-(MS/P), CS3N-MS CS3U-(MB/MB-AG/MS/P/P HE/PB/PB-AG) CS3W-(MB-AG/MS/P/P-PB-AG) CS3Y-MB-AG, CS5A-M CS6.1-54TM-H CS6.1-60TM-H CS6.1-72TB-H CS6.2-48TM-xxxH CS6.2-66TB-xxxH CS6.2-66TB-xxxHR CS6K-(M/MS/MS AllBlack/P/P HE) CS6P-(M/P), CS6R-MS CS6R-xxxMS-HL CS6U-(M/P/P HE), CS6W-(MB-AG/MS) CS6W-xxx-TB-AG

Manufacture	Module Model / Series
Canadian Solar (Cont.)	CS6X-P, CSX-P, CS7L-MB-AG CS7L-MB-AG CS7L-TB-AG CS7L-xxxMB-AG CS7N-xxxMB-AG CS7N-xxx MS CS7N-xxxTB-AG ELPS CS6(A/P)-MM
Centrosolar America	C-Series & E-Series
CertainTeed	CT2xxMxx-01 CT2xxPxx-01 CT54M10XXX-N07 CT72M10XXX-N07 CTM10400HC11-06 CTM10400HC11-08 CTM10400HC11-09 CTTCxxxHC12-08 CTxxxHC11-04 CTxxxHC11-06 CTxxxMxx-01 CTxxxMxx-02 CTxxxMxx-03 CTxxxMxx-04 CTxxxPxx-01
Eco Solargy	Apollo 1000 Orion 1000
EMMVEE	ExxxHCBT144-T Titanium Clear
Es Foundry	ES-DN8-H54B-xxx ES-DN8-H72-xxx

- Unless otherwise noted, all modules listed above include all wattages and specific models within that series. Variable wattages are represented as "xxx"
- Items in parenthesis are those that may or may not be present in a compatible module's model ID
- Slashes "/" between one or more items indicates that either of those items may be the one that is present in a module's model ID.
- The frame profile must not have any feature that might interfere with the bonding devices that are integrated into the racking system
- Use with a maximum over current protection device OCPD of 30A
- Please see GridFlex 10 information at Unirac.com to ensure the exact solar module selected is approved for use with GridFlex 10
- Listed models can be used to achieve a Class A fire system rating, for low slope applications, only when modules fire typed 1, 2, 3 with a metal frame, 19, 22, 25, 29 or 30.

Electrical Bonding and Grounding Test Modules

The list below is not exhaustive of compliant modules but shows those that have been evaluated and found to be electrically compatible with the GridFlex 10 system.

Manufacture	Module Model / Series
Es Foundry (Cont.)	ES-DP8-H54B-xxx ES-DP8-H72-xxx
ET Solar	ET AC Module ET-M772BH520-550WW/WB ET-M772BHxxxTW/TB ET Module ET-N772TBHxxxGL
Fellow Energy	FE72-18X(ND)
First Solar	FS-6XXX(A) FS-6XXX(A)-P FS-6XXX(A)-P-I
Flextronics	FXS-xxxBB
Freedom Forever	FF-MP1-BBB-xxx FF-MP-BBB-xxx
FreeVolt	PVGraf
GCL	GCL-M6 Series GCL-P6
Gstar Solar	GSD7S54T-xxxBT GSP7G54M(H)
Hansol	TD-AN3 TD-AN4 UB-AN1 UD-AN1
Hanwha SolarOne	HSL 60
Heliene	132HC M10 SL Monofacial Module 144HC M10 NTYP SL Bifacial Module 144HC M10 SL Bifacial 144HC M6

Manufacture	Module Model / Series
Heliene (Cont.)	156HC M10 NTYP SL Bifacial Module 156HC M10 SL Bifacial 36M, 36P 60M, 60P, 72M & 72P Series
H-SAAE	HT60-156M(V)-C HT60-156M-C HT72-156(M/P) HT72-156M(PD)-BF HT72-156M(PDV)-BF HT72-156P(V)-C HT72-156P-C HT72-166M HT72-18X HT72-18X(ND)-F
Hyperion Solar (Runergy)	HY-DH108N8B HY-DH108P8(B) HY-DH132N11 HY-DH144P8 HY-DH156N8 HY-DH156P8 HY-DH96N11B
Hyundai	HiA-SxxxHG HiD-SxxxRG(BK) HiN-SxxxXG(BK) HiN-TxxxNF(BK) HiN-TxxxNI HiN-TxxxNJ HiN-TxxxOJ HiS-S400PI HiS-SxxxGI HiS-SxxxOJ HiS-SxxxXG(BK) HiS-SxxxYH(BK)

Manufacture	Module Model / Series
Hyundai (Cont.)	HiS-TxxxNJ KG, MG, RW, TG, RI, RG, TI, KI, HI Series
Illuminate USA	IL5-72HBD-xxx M IL8-66HGD-xxx M
Imperial Star	ISM7-SHDD108-400/M
INDEPWR Solar	iPWR-M10-60BX2S-xxxW iPWR-M10-54BX2S-xxxW
ITEK	iT-SE Series
Japan Solar	JPS-60 JPS-72 Series
JA Solar	JAM54S30 xxx/MR JAM54S31 xxx/MR JAM6(K)-60/xxx JAM66D45 LB JAM72D10 xxx/MB JAM72D30MB JAM72D40 xxx/MB JAM72S30 /MR JAM78D10MB JAP6(k)-72-xxx/4BB JAP6 60-xxx JAP72S##-xxx/** JAP6(k)-60-xxx/4BB, JAP60S##-xxx/** JAM6(k)-72-xxx/**, JAM72S##-xxx/** JAM6(k)-60-xxx/**, JAM60S##-xxx/** i. ##: 01, 02, 03, 09, 10 ii. **: SC, PR, BP, HiT, IB, MW, MR ** = Backsheet, ## Cell technology
Jinko	JKM JKMS Series

- Unless otherwise noted, all modules listed above include all wattages and specific models within that series. Variable wattages are represented as "xxx"
- Items in parenthesis are those that may or may not be present in a compatible module's model ID
- Slashes "/" between one or more items indicates that either of those items may be the one that is present in a module's model ID.
- The frame profile must not have any feature that might interfere with the bonding devices that are integrated into the racking system
- Use with a maximum over current protection device OCPD of 30A
- Please see GridFlex 10 information at Unirac.com to ensure the exact solar module selected is approved for use with GridFlex 10
- Listed models can be used to achieve a Class A fire system rating, for low slope applications, only when modules fire typed 1, 2, 3 with a metal frame, 19, 22, 25, 29 or 30.

Electrical Bonding and Grounding Test Modules

The list below is not exhaustive of compliant modules but shows those that have been evaluated and found to be electrically compatible with the GridFlex 10 system.

Manufacture	Module Model / Series
Jinko(Cont.)	JKMxxxM-6RL3-B JKMxxxM-72HBL-V JKMxxxM-72HL4-(T)V JKMxxxM-72HL4-TV JKMxxxM-72HLM-TV JKMxxxM-72HL-V JKMxxxM-7RL3-TV JKMxxxM-7RL3-V JKMxxxN-54HL4-B JKMxxxN-72HL4-BDV JKMxxxN-72HL4-BDV (30mm&35mm Frame Height) JKMxxxN-72HL4-BDX JKMxxxN-72HL4-TV
Kyocera	KD-F KU Series
LA Solar	BLA Model LSxxxBF LSxxxBL LSxxxHC LSxxxHC(166) LSxxxHC (430-450 watt range)
LG Electronics	LGxxx(A1C/M1C/M1K/N1C/N1K/Q1C/Q1K/ QAC/QAK)-A6 LGxxx(E1C/E1K/N1C/N1K/N2T/N2W/S1C/S2W/Q1C/Q1K)-A5 LGxxx(M1C/N1C/Q1C/Q1K)-N5 LGxxx(N1C/N1K/N2T/N2W)-E6 LGxxx(N1C/N1K/N2W/Q1C/Q1K)-V5 LGxxx(N1C/N1K/N2W/S1C/S2W)-G4 LGxxx(N1K/N1W/N2T/N2W)-L5 LGxxxN1K-B6 LGxxxN2T-B5

Manufacture	Module Model / Series
LG Electronics (Cont.)	LGxxxN2T-J5 LGxxxN2W-B3 LGxxxN3K-V6
LONGi	LR4-60(HPB/HPH) LR4-72(HPH) LR4-72HBD xxxM LR5-54HABB-xxx M (fire type 29 only) LR5-54-HPB-xxx M LR5-72HBD xxx M LR6-60 LR6-60(BK/HPB/HPH/HV/PB/PE/PH) LR6-72 LR6-72(BK/HV/PB/PE/PH) LR7-72HGD-xxx M LR8-54HGBB LR8-66HGD-xxx M RealBlack LR4-60HPB RealBlack LR6-60HPB
Maxeon	SPR-MAX3-xxx-COM SPR-MAX3-XXX-R SPR-MAX3-XXX-BLK-R SPR-MAX6-xxx SPR-MAX6-xxx-BLK
Meyer Burger	Meyer Burger Black Meyer Burger White Meyer Burger Glass
Mission Solar Energy	MSE Mono MSE Perc MSExxx(SR8T/SR8K/SR9S/SX5T) MSExxx(SX5K/SX6W) MSExxxHT0B MSExxxSX5K

Manufacture	Module Model / Series
Mission Solar Energy (Cont.)	MSExxxSX5T MSExxxSX6Z MSExxxSX9R MSH10-xxxHN4G MSH10-xxxHN4G-DC11 MSH10-xxxHT4T MSI10-xxxHN4G MSI10-xxxHT4G MSI10-xxxHT4T MSN10xxxHT4T MSExxxSX9Z
Mitrex	Mxxx-I3H Mxxx-L3H
Mitsubishi	MJE MLE Series
mSolar	108BB HC Series (TXI10-xxx108BB) 144BB HC Series (TXS6-xxx144BB)
Neo Solar Power Co.	D6M Series
NE Solar	NESE xxx-60MH-M6 NESE xxx 66MHB-G12 NESE xxx-66THB-G12R NESE xxx-72MHB-M10 NESE xxx 72MHT-M10 NESE xxx 72THB-M10 NESE xxx 72MHB-M10
Optivolt	OPT10MxxxB
Panasonic	EVPVxxx EVPVxxx(H/K/PK/HK/HK2) VBHNxxxKA VBHNxxxKA03/04

- Unless otherwise noted, all modules listed above include all wattages and specific models within that series. Variable wattages are represented as "xxx"
- Items in parenthesis are those that may or may not be present in a compatible module's model ID
- Slashes "/" between one or more items indicates that either of those items may be the one that is present in a module's model ID.
- The frame profile must not have any feature that might interfere with the bonding devices that are integrated into the racking system
- Use with a maximum over current protection device OCPD of 30A
- Please see GridFlex 10 information at Unirac.com to ensure the exact solar module selected is approved for use with GridFlex 10
- Listed models can be used to achieve a Class A fire system rating, for low slope applications, only when modules fire typed 1, 2, 3 with a metal frame, 19, 22, 25, 29 or 30.

Electrical Bonding and Grounding Test Modules

The list below is not exhaustive of compliant modules but shows those that have been evaluated and found to be electrically compatible with the GridFlex 10 system.

Manufacture	Module Model / Series
Panasonic (Cont.)	VBHNxxxSA06/SA06B/SA11/SA11B VBHNxxxSA15/SA15B/SA16/SA16B VBHNxxxSA17/SA17G/SA17E/SA18/SA18E VBHNxxxZA01/ZA02/ZA03/VBHNxxx-ZA04
Peimar	SGxxxM (FB/BF) SMxxxM
Philadelphia Solar	PS-M108(HCBF)-400W (30 & 35mm frames) PS-M144(HCBF)-xxxW PS-MNB144(HCBF)-xxxW PS-MNB156(HCBF)-xxxW
Phono Solar	PSxxxM1-20/U PSxxxM1-20UH PSxxxM1-20/UH PSxxxM1H-20/U PSxxxM1H-20UH PSxxxM1H-20/UH PSxxxM-24/T PSxxxM-24/TH PSxxxM4(H)-24/TH PSxxxM8GFH-24TNH PSxxxMH-24/T PSxxxMH-24/TH
Prism Solar	P72 Series, P72X-xxx
Q Cells	Peak G5(SC) , G6(+)(SC)(AC), G7, G8(+), Peak L-G5, L-G6, L-G7, L-G8(BFF) Plus, Pro, Peak, G3, G4, Plus, Pro, Peak L-G2, L-G4, L-G5 Q.PEAK DUO BLK ML-G10.D+ Q.PEAK DUO BLK ML-G10.D1+/AC

Manufacture	Module Model / Series
Q Cells (Cont.)	Q.PEAK DUO ML-G12S.P3 / BFG Q.PEAK DUO XL-(G11.2/G11.3) Q.PEAK DUO XL-(G9/G9.2/G9.3) Q.PEAK DUO XL-G10.3/BFG Q.PEAK DUO XL-G10.d/BFG Q.PEAK DUO XL-G11.3/BFG Q.PEAK DUO XL-G11S Q.PEAK DUO XL-G11S.3 / BFG Q.PEAK DUO XL-G11S.B3 / BFG Q.PEAK DUO XL-G11S.L3 / BFG Q.PEAK DUO XL-G9.3/BFG Q.PEAK DUO(BLK)-G6+ Q.PEAK DUO (BLK)-G7 Q.PEAK DUO (BLK) G8(+) Q.PEAK DUO (BLK) ML-G10(a)(+) Q.PEAK DUO (BLK) ML-G9(+) Q.PEAK DUO BLK G10(+) Q.PEAK DUO BLK G10+ /AC Q.PEAK DUO BLK ML-G10+/AC Q.PEAK DUO BLK ML-G10.C+ Q.PEAK DUO BLK ML-G10.C1+/AC Q.PEAK DUO BLK ML-G10+ / t Q.PEAK DUO BLK ML-G10+ / TS Q.PEAK DUO-G10+ Q.TRON BLK M-G2(.H1)(.F1)(.C1)+/AC Q.TRON BLK M-G2+ AC Q.TRON BLK M-G2+/AC Q.TRON BLK M-G2.C+ Q.TRON BLK M-G2.C1+/AC Q.TRON BLK M-G2.C3+/AC Q.TRON BLK M-G2.C4+/AC Q.TRON BLK M-G2.D+ Q.TRON BLK M-G2.D1+/AC Q.TRON BLK M-G2.D2+/AC Q.TRON BLK M-G2.H+

Manufacture	Module Model / Series
Q Cells (Cont.)	Q.TRON BLK M-G2.H1+/AC. Q.TRON BLK M-G2+ SERIES Q.TRON BLK M-G2.Y+ Q.TRON M-G2+ SERIES Q.TRON ML-G3.3/BFG Q.TRON XL-G2.3 / BFG Q.PEAK DUO BLK ML-G10.XY+/AC (where “X” = any letter between A to W, where “Y” = any number between 1 to 9.) QPEAK DUO G10.C1+ AC Q.PEAK DUO L-(G7/G7.1/G7.2/G7.3/G7.7) Q.PEAK DUO L-(G8/G8.1/G8.2/G8.3) Q.PEAK DUO L-G6.3 / BFG Q.PEAK DUO L-G8.3 (BFF/BFG/BGT) Q.PEAK DUO ML-G12S.3/BFG Q.PEAK DUO ML-G12S.3 / BFG, Q.PEAK DUO ML-G12S.7/BFG Q.PEAK DUO ML-G12S.d / BFG Q.PEAK DUO XL-(G10/G10.2/G10.3/G10.c/G10.d)
REC	RECxxxAA (BLK/Pure/Pure-R/ Pure-RX/ Pure 2/ Pro M) RECxxxAA Pure-RX RECxxxAA PURE-RX-DC RECxxxNP (N-PEAK) RECxxxNP2 (Black) RECxxxNP3 Black RECxxxPE RECxxxPE72 RECxxxTP RECxxxTP2(M/BLK2) RECxxxTP2S(M)72 RECxxxTP3M (Black)

- Unless otherwise noted, all modules listed above include all wattages and specific models within that series. Variable wattages are represented as "xxx"
- Items in parenthesis are those that may or may not be present in a compatible module's model ID
- Slashes "/" between one or more items indicates that either of those items may be the one that is present in a module's model ID.
- The frame profile must not have any feature that might interfere with the bonding devices that are integrated into the racking system
- Use with a maximum over current protection device OCPD of 30A
- Please see GridFlex 10 information at Unirac.com to ensure the exact solar module selected is approved for use with GridFlex 10
- Listed models can be used to achieve a Class A fire system rating, for low slope applications, only when modules fire typed 1, 2, 3 with a metal frame, 19, 22, 25, 29 or 30.

Electrical Bonding and Grounding Test Modules

The list below is not exhaustive of compliant modules but shows those that have been evaluated and found to be electrically compatible with the GridFlex 10 system.

Manufacture	Module Model / Series
REC (Cont.)	RECxxxTP4 (Black) RECxxxTP72
Regitec Solar	RMHT54/xxxAB2
Renesola	All 60-cell modules RS6-xxxNBG-E3
Risen	RSM Series, RSM110-8-xxxBMDG
SEG Solar	SEG-xxx-BMA-BG SEG-xxx-BMA-HV SEG-xxx-BMA-TB SEG-xxx-BMB-BG SEG-xxx-BTA-BG SEG-xxx-BMB-HV SEG-XXX-BMB-TB SEG-xxx-BMD-BG SEG-xxx-BMD-HV SEG-xxx-BMD-TB SEG-xxx-BTB-BG SEG-xxx-BTD-BG
S-Energy	SL40-60MAI/MBI/MCI-xxxV SL45-60BGI/BHI SL45-60MBI-xxxZ SN60 Series SN72
Seraphim	SEG-(6PA/6PB/6MA/6MA-HV/6MB/E01/E11) SRP-(6QA/6QB) SRP-320-375-BMB-HV SRP-390-405-BMD-HV SRP-390-450-BMA-HV SRP-xxx-6MB-HV SRP-xxx-BMC-HV

Manufacture	Module Model / Series
Seraphim (Cont.)	SRP-xxx-BMD-HV SRP-xxx-BMZ-HV SRP-xxx-BTA-BG SRP-xxx-BTB-BG SRP-xxx-BTC-BG
Sharp	NU-SA NU-SC Series
Silfab	SILxxx(BG/BK/BL/HC/HC+/HL/HM/HN/ML/NL/NT/NX/NU/QD/QM) SIL-xxx XL SIL-xxx XM SIL-xxx XM+ SLA-M, SLA-P, SLG-M, SLG-P & BC Series
Sirius	ELNSM54M-HC-BF Series ELNSM54M-HC-N ELNSM54M-HC Series
Solar4America	S4Axxx-108MH10BB S4Axxx-108MH10xxx S4Axxx-108TH10xxx S4Axxx-144MH10xxx S4Axxx-144TH10xxx S4Axxx-144TH16xxx S4Axxx-72MH5BB
SolarEver USA	SE-166*83-xxxM-120N SE-182*91-xxxM-108N SE-182*105-xxxM-96-BD
Solaria	PowerXT-xxxR-(AC/PD/BD) PowerXT-xxxC-PD PowerXT-xxxR-PM (AC) PowerX-400R
Solar Space	SS8-54HDB-xxx-N

Manufacture	Module Model / Series
Solar Space (Cont.)	SS8-54HD-xxx-N SS8-72HD-xxx-M SS8-72HD-xxx-N SS8-78HD-xxx-M SS9-66HD-xxx-N SSA-48HDB-xxx-N SSA-48HD-xxx-N SSA-54HDB-xxx-N SSA-54HD-xxx-N SSA-66HD-xxx-N
Solartech	STU HJT, STU PERC & Quantum PERC
SolarWorld	Sunmodule Protect Sunmodule Plus/Pro
Sonali	SS-M-360 to 390 Series SS-M-390 to 400 Series SS-M-440 to 460 Series SS-M-430 to 460 BiFacial Series
Sun Edison	F-Series R-Series
Suniva	MV Series Optimus Series (35mm)
Sunket Solar	SKT580M10-144S2
Sunmac Solar	M754SH-BB Series
SunPower	AC, X-Series, E-Series & P-Series SPR E20 435 COM (G4 Frame) Axxx-BLK-G-AC SPR-Mxxx-H-AC SPR-Mxxx-BLK-H-AC
Sunpro Power	SPDGxxx-120M12

- Unless otherwise noted, all modules listed above include all wattages and specific models within that series. Variable wattages are represented as "xxx"
- Items in parenthesis are those that may or may not be present in a compatible module's model ID
- Slashes "/" between one or more items indicates that either of those items may be the one that is present in a module's model ID.
- The frame profile must not have any feature that might interfere with the bonding devices that are integrated into the racking system
- Use with a maximum over current protection device OCPD of 30A
- Please see GridFlex 10 information at Unirac.com to ensure the exact solar module selected is approved for use with GridFlex 10
- Listed models can be used to achieve a Class A fire system rating, for low slope applications, only when modules fire typed 1, 2, 3 with a metal frame, 19, 22, 25, 29 or 30.

Electrical Bonding and Grounding Test Modules

The list below is not exhaustive of compliant modules but shows those that have been evaluated and found to be electrically compatible with the GridFlex 10 system.

Manufacture	Module Model / Series
Sunpro Power (Cont.)	SPDGxxx-N108M10 SPDGxxx-N144M10
SunTech	STP STPXXXS - B60/Wnhb
Talesun	Hipor M Smart TD6I72M TD7G72M TM3G54M TM3G66M TM7G54M TM7G60M TM7G72M TP572 TP596 TP654 TP660 TP672 TP6F72M TP6F72M(H) TP7G54M(H)
Tesla	SC, SC B, SC B1, SC B2, TxxxS, TxxxH Tesla Solar Panel TSP-415/TSP-420
Thornova	TS-BG54 TS-BG72 TS-BGT72(xxx)
Trina	DE06 DE09.05 DE09C.07 DEG15HC.20(II)

Manufacture	Module Model / Series
Trina (Cont.)	DEG15MC.20(II) DEG15VC.20(II) DE18M(II) DEG18MC.20(II) DE19 DEG19C.20 PA05 PD05 DD05, DD06 PD14, PE14, DD14, DE14, DE15, DE15V(II) TSM-DE06X.05(II) TSM-DE09.05 TSM-DE09.08 TSM-DE09C.07 TSM-DE15H(II) TSM-DEG21C.20 TSM-NE09RC.05 TSM-NE09RH.05 TSM-NE19RC TSM-NEG19RC.20 TSM-NEG21C.20
TSMC	TS-150C2 CIGSw
Universal Solar	UNI4xx-144BMH-DG UNI5xx-144BMH-DG UNIxxx-108M-BB UNIxxx-120M-BB UNIxxx-120MH
Upsolar	UP-MxxxM(-B) UP-MxxxP
URECO	D7Kxxx(H7A/H8A) D7Mxxx(H7A/H8A) F6MxxxE7G-BB

Manufacture	Module Model / Series
URECO (Cont.)	FAKxxx(C8G/E8G) FAMxxxE7G-BB FAMxxxE8G(-BB) FBKxxxM8G FBMxxxM7G-BB FBMxxxMFG-BB
Vikram Solar	Eldora, Somera, Ultima PREXOS VSMDHT.60.AAA.05 PREXOS VSMDHT.72.AAA.05 Paradea VSMDH.72.AAA.05
Vina	VNS-72M1-5-xxxW-1.5 VNS-72M3-5-xxxW-1.5 VNS-144M1-5-xxxW-1.5 VNS-144M3-5-xxxW-1.5 VNS-120M3-5-xxxW-1.0
VSUN	VSUN4xx-144BMH VSUN4xx-144BMH-DG VSUN5xx-144BMH-DG VSUNxxx-108BMH VSUNxxx-108M-BB VSUNxxx-120BMH VSUNxxx-120M-BB VSUNxxx-132BMH VSUNxxx-144BMH VSUNxxx-144M-BB VSUNxxx-144MH VSUNxxx-144M-BW VSUNxxx-60M-BB VSUNxxx-72MH VSUNxxxN-108BMH-DG-BB VSUNxxxN-132BMHR VSUNxxxN-144BMH VSUNxxxN-144BMH-DG VSUNxxxN-144MH

- Unless otherwise noted, all modules listed above include all wattages and specific models within that series. Variable wattages are represented as "xxx"
- Items in parenthesis are those that may or may not be present in a compatible module's model ID
- Slashes "/" between one or more items indicates that either of those items may be the one that is present in a module's model ID.
- The frame profile must not have any feature that might interfere with the bonding devices that are integrated into the racking system
- Use with a maximum over current protection device OCPD of 30A
- Please see GridFlex 10 information at Unirac.com to ensure the exact solar module selected is approved for use with GridFlex 10
- Listed models can be used to achieve a Class A fire system rating, for low slope applications, only when modules fire typed 1, 2, 3 with a metal frame, 19, 22, 25, 29 or 30.

Electrical Bonding and Grounding Test Modules

The list below is not exhaustive of compliant modules but shows those that have been evaluated and found to be electrically compatible with the GridFlex 10 system.

Manufacture	Module Model / Series
Waaree	Arka Series WSMDi Bi-55-xxx BiN-08-xxx
Winaico	WSP Series WST
Yingli	YGE & YLM Series
Yotta Energy	YSM-B450-1
ZNShine Solar	ZXM6-72 Series ZXM6-NH120 Series ZXM6-NH144 ZXM6-NHLDD144 ZXM7-SH108 Series ZXM7-SHDB144 ZXM7-SHLDD144 ZXM7-UHLDD144 ZXM8-GPLDD132 Series ZXM8-TPLDD132 ZXM7-UHLDD108

- Unless otherwise noted, all modules listed above include all wattages and specific models within that series. Variable wattages are represented as "xxx"
- Items in parenthesis are those that may or may not be present in a compatible module's model ID
- Slashes "/" between one or more items indicates that either of those items may be the one that is present in a module's model ID.
- The frame profile must not have any feature that might interfere with the bonding devices that are integrated into the racking system
- Use with a maximum over current protection device OCPD of 30A
- Please see GridFlex 10 information at Unirac.com to ensure the exact solar module selected is approved for use with GridFlex 10
- Listed models can be used to achieve a Class A fire system rating, for low slope applications, only when modules fire typed 1, 2, 3 with a metal frame, 19, 22, 25, 29 or 30.