EcoFoot5D™
HIGH DENSITY 5-DEGREE
BALLAST RACKING SYSTEM

# INSTALLATION MANUAL

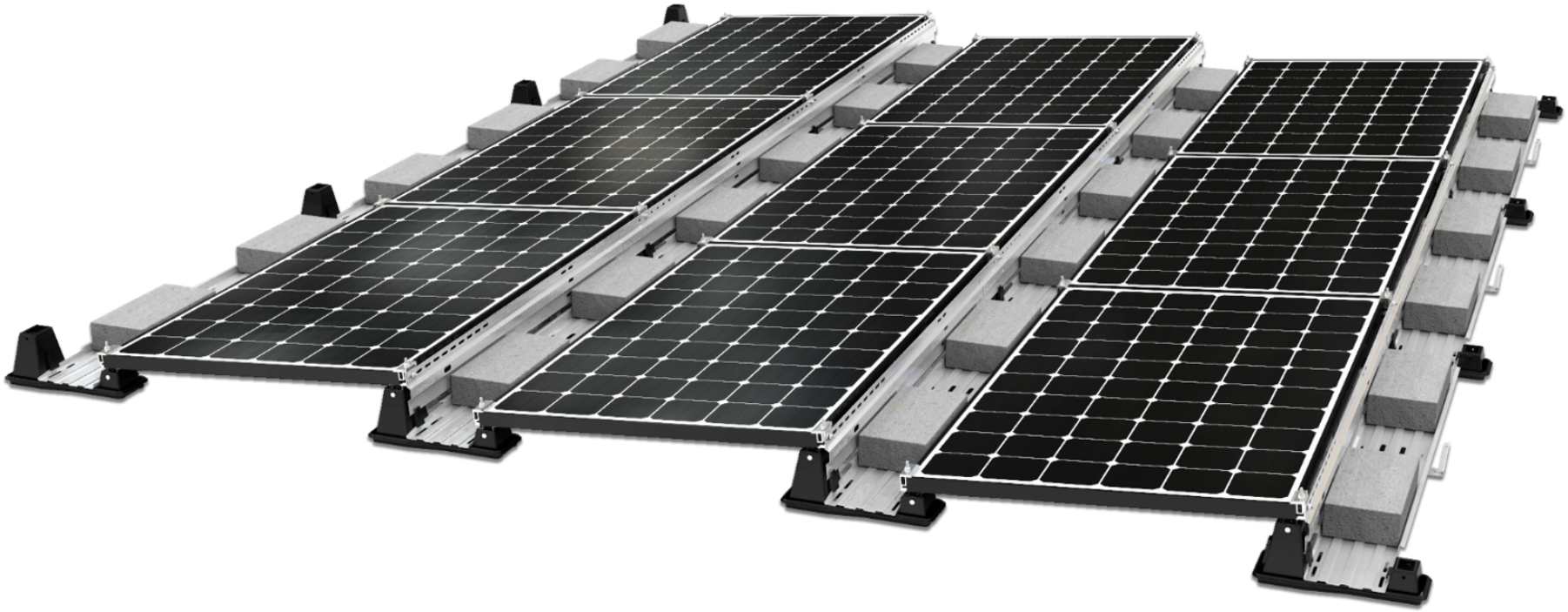

## UNIRAC Code-Compliant Installation Manual

© 2020 by Unirac, Inc. All rights reserved.

**UNIRAC welcomes input concerning the accuracy and user-friendliness of this publication. Please write to publications@unirac.com.**

**PUB2026OCT13**

EcoFoot5D™
HIGH DENSITY 5-DEGREE
BALLAST RACKING SYSTEM

# INSTALLATION MANUAL

## TABLE OF CONTENTS


INTRODUCTION . . . . . 1-2
WARNINGS AND SAFETY . . . . . 3
GENERAL APPLICATION NOTES . . . . . 4-5
SYSTEM COMPONENTS . . . . . 6-7
SYSTEM INSTALLATION STEPS . . . . . 8-12
STEPPED ARRAY INSTALLATION . . . . . 13-14
MLPE BRACKET INSTALLATION . . . . . 15
MODULE REMOVAL . . . . . 16
GROUNDING AND BONDING . . . . . 17
CODE COMPLIANCE NOTES . . . . . 18
MECHANICAL LOAD TEST . . . . . 19-21
COMPATIBLE MODULES . . . . . 22-25


*If provided refer to construction drawings for project specific details. Construction drawings have precedence over these installation guidelines.

EcoFoot5D™
HIGH DENSITY 5-DEGREE
BALLAST RACKING SYSTEM

# INSTALLATION MANUAL

**Legal Notices**

©2017 Unirac®, Inc. Unirac® and EcoFoot2+® are registered trademarks of Unirac, Inc. EcoFoot5D™ is a trademark of Unirac, Inc., registration pending.

## INTRODUCTION

EcoFoot5D™ is a 5-degree ballasted racking system designed to fit more modules on a roof, maximizing power density. The modular design is built on the proven, industry-preferred, beautifully simple and fast-to-install modular technology of the EcoFoot platform and sister product, EcoFoot2+.

EcoFoot5D consists of five simple components. Installation is accomplished in six simple steps. Much of the installation is tool-less.

EcoFoot5D Bases self-align, requiring only two chalk lines. The PV module installation automatically moves the Bases into perfect placement. Inter-row ballast placement and easy-reach wire management provide superior accessibility during and after installation.

Stackable Bases enable the transport of up to 290kW of Bases on 1 standard pallet, streamlining logistics. The combined effect of simplicity, maximum density, and minimized shipping, storage and transporting costs results in an ultra cost-effective racking solution.

## FIELD SUPPORT CONTACT INFORMATION

Unirac proudly offers dedicated engineering expertise and superior customer support. For questions about the installation procedures or a specific application, please visit www.unirac.com.

## INSTALLER RESPONSIBILITY

The installer is solely responsible for:

- Utilizing all necessary safety equipment, as required by applicable rules and regulations.
- Complying with all applicable local and national building codes, including any that may supersede this manual.
- Ensuring that Unirac® EcoFoot5D™ and other products are appropriate for the specific installation and are designed for the installation environment.
- Ensuring that the roof, its rafters, connections, and other structural support members can support the array under all conditions.
- Maintaining the waterproof integrity of the roof including selection of appropriate flashing if the system is being installed using attachments.
- Ensuring safe installation of all electrical aspects of the entire system.

## DISCLAIMER OF LIABILITY

Unirac® does not assume responsibility and expressly disclaims liability for loss, damage, or expense arising out of, or in any way connected with installation, operation, use, or maintenance by using this manual.

Unirac assumes no responsibility for any infringement of patents or other rights of third parties, which may result from use of modules. No license is granted by implication or under any patent or patent rights. The information in this manual is believed to be reliable, but does not constitute an expressed and/or implied warranty.

Unirac reserves the right to make changes to the product, specifications, data sheets and this manual without prior notice. This document is not prescriptive regarding safety and does not purport to address all the safety concerns that may arise with its use. Contractors should become familiar with all applicable safety, health, and regulatory requirements before beginning work.

Unauthorized field modification of Unirac components or assemblies may affect Unirac warranty coverage. Provide written drawings for Unirac's review, comment and approval prior to attempting any field modifications.

## WARNINGS AND SAFETY

Both electrical and roofing knowledge are required to correctly and safely install a solar photovoltaic system. Only qualified and certified installation professionals should install EcoFoot5D. Failure to follow the methods and procedures outlined in this manual may result in injury and/or damage to property.

Carefully read this manual before starting any work. Store a copy of this manual on the job site at all times and contact Unirac with any installation questions related to EcoFoot5D.

**⚠ WARNING**

**Please note the following warnings when installing EcoFooot5D:**

- EcoFoot5D components fit together tightly and could cause pinch injuries.
- EcoFoot5D components may be hot to the touch if left in the sun.

**Please follow the safety requirements below when installing EcoFoot5D:**

- Always keep children and unauthorized people away from work areas.
- Always wear required OSHA approved Personal Protective Equipment (PPE).
- Always use insulated tools when working with or near electrical systems.
- Always provide OSHA approved fall protection for all installation personnel.
- Never wear jewelry during mechanical and electrical installation work.
- Never work in rain, snow or extremely windy conditions.
- Never leave a module unsupported or unsecured on the roof.
- Never install broken photovoltaic modules.

## ECOFOOT5D GENERAL APPLICATION NOTES

**Site-Specific System Design:** Unirac provides drafting services on all EcoFoot5D projects. This service produces a site-specific design package with an Engineered Stamped Layout including detailed ballast plan and bill of materials.

**Roof Type:** EcoFoot5D is designed to mount photovoltaic modules to a range of roof surfaces, including: EPDM, TPO, PVC, Mineral Cap Sheet (a.k.a. Rolled Asphalt), Tar and Gravel.

**Roof Slope Range:** 0-7 degrees maximum, 3-degree limit for unattached seismic.

**Wind Zone:** EcoFoot5D is designed to mount photovoltaic modules on flat roof surfaces with a maximum pitch of 7 degrees in areas with extreme wind conditions. Please contact Unirac for clarification or assistance.

**Installation Requirements:** EcoFoot5D is a ballasted photovoltaic racking designed as a system. The system requires all EcoFoot5D components, the specific module, and ballast placement prescribed in the PE stamped design. The absence of any of these elements in any given sub-array could present a compromised condition on the roof. Arrays shall not be left unattended in such a state during an installation.

This install manual officially documents the components used and proper methods for an EcoFoot5D installation. Bonding elements are incorporated into EcoFoot5D components. As the system is built on the roof, components and modules are bonded together. Specific steps to ensure a bonded system are described through the installation manual. It is the installer's responsibility to ensure that the system is safely and properly installed, and that the system is bonded back to a final ground point.
When wiring the array, keep bare copper from contacting bare aluminum.

**Thermal and Seismic Design Requirements:** EcoFoot5D is a flexible and expandable design that accommodates various array geometries. Maximum widths for arrays are as follows:

- 60-cell modules, 26 modules in a row
- 72-cell modules, 22 modules in a row

Minimum spacing between sub-arrays is 6". Site specifics may further limit array sizes and spacing.

**Seismic and Uplift Design Requirements:** EcoFoot5D can be attached when required by seismic and uplift conditions as specified by the Authority Having Jurisdiction (AHJ). Use the method required for the specific Fire Code Rating of the PV module.

**Re-Inspection:** Unirac recommends periodic re-inspection of the installation for loose components, loose fasteners, and any corrosion, such that if found, the affected components are to be immediately replaced. Any components showing signs of damage that compromise safety shall be replaced immediately

**Compatible Modules:** Unirac has evaluated many photovoltaic modules for installation compatibility with the EcoFoot5D ballasted racking system. A list of compatible modules may be found on "Compatible Modules" page

**UL2703 Qualification:** In cases where UL 2703 certification is required, the EcoFoot5D system conforms to the UL2703 Standard for grounding and bonding and fire ratings. The EcoFoot5D system may be used to ground and/or mount a PV module complying with UL1703 or UL61730 only when the specific module has been evaluated for grounding and /or mounting in compliance with the included instructions.

EcoFoot5D racking system maintains a Class A fire rating for Type 1, 19, 20, 22, 25, 29,30, and 38 modules with or without Ballast Trays. For Type 2 modules, Class A fire rating is achieved only when Ballast Trays are installed. Contact Unirac with any questions about fire type compatibility.

For roofs with lower fire ratings, the existing rating is maintained when EcoFoot5D is used.

### ❶ EcoFoot5D Base

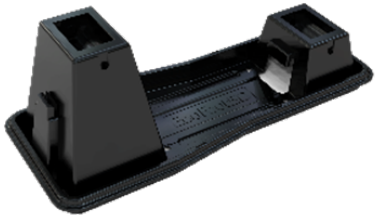

### ❷ Universal Clamp Lower



### ❸ Universal Clamp Upper

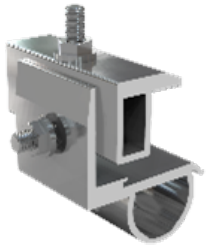

**Hardware Required**
All required hardware is included.

**Tools Required**
½" Deep Socket
Calibrated Torque Wrench

### ❹ Clevis Pins



### ❺ Wind Deflector

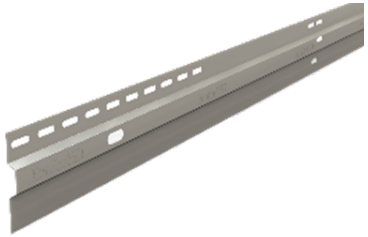

### ❻ Ballast Tray

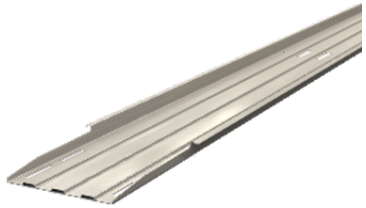

**Torque Settings**
14 ft-lbs on all 5/16" Fasteners

### ❼ Mid-Support Upper



### ❽ Mid-Support Lower



### ❾ 5/16" Thread-Forming Screw



### ❿ Ecofoot MLPE Bracket

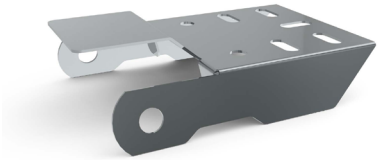

| S.NO. | DESCRIPTION | | PART NUMBER |
|---|---|---|---|
| 1 | EcoFoot5D Base | | ES10490 |
| 2 | Universal Clamp Lower | | ES10459 |
| 3 | Universal Clamp Upper | | ES10458 |
| 4 | Clevis Pins | | ES10476-CP |
| 5 | Wind Deflector | 70" | ES10494 |
| | | 82" | ES10496 |
| | | 86" | ES11024 |
| | | 92.25" | ES11026 |
| 6 | Ballast Tray | 71" | ES10486 |
| | | 83" | ES10488 |
| | | 87" | ES11023 |
| | | 93.25" | ES11025 |
| 7 | Mid-Support Upper | | ES10481-CP |
| 8 | Mid-Support Lower | | ES10482-CP |
| 9 | 5/16" Thread-Forming Screw | | ES10456-CP |
| 10 | EcoFoot MLPE Bracket | | ES10970 |

### Step 1 – Install Pre-assembled Universal Clamps into Bases

- Place Lower and Upper Universal Clamp into EcoFoot5D Base as shown.
- Push Clevis Pins completely into EcoFoot5D Base to secure Rocker.

**Note: The Upper Clamp includes a threaded stud and nut to install the Wind Deflector as shown in Step 6.**

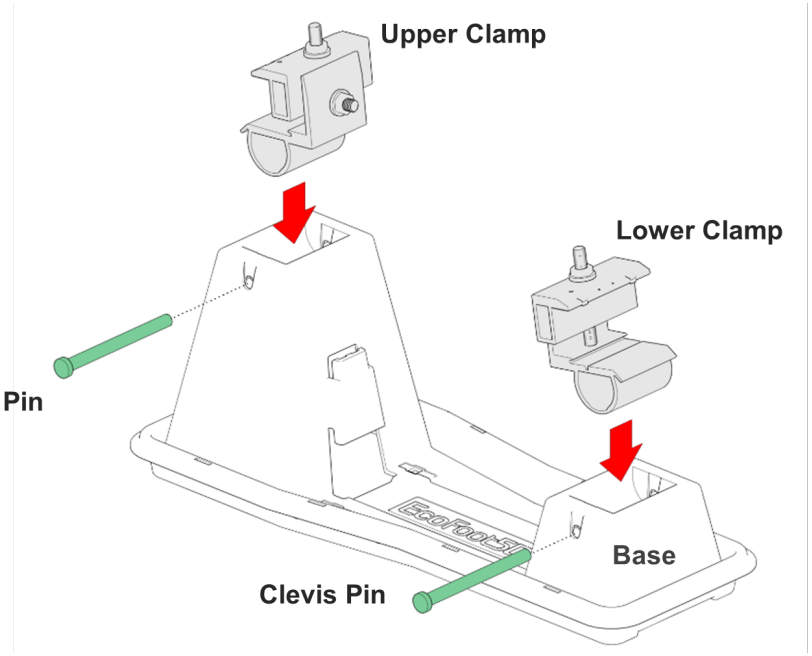


### Installation Tips

- Only install Clamps where modules will rest.
- See Step 3 for correct placement and orientation of Clamps.

### Step 2 – Position Array

- Snap two chalk lines on roof denoting outside edges of the EcoFoot5D Bases, per project drawing. Start from the north or south edge. Ensure chalk lines are square.
- Place EcoFoot5D Bases in approximate position throughout the array.

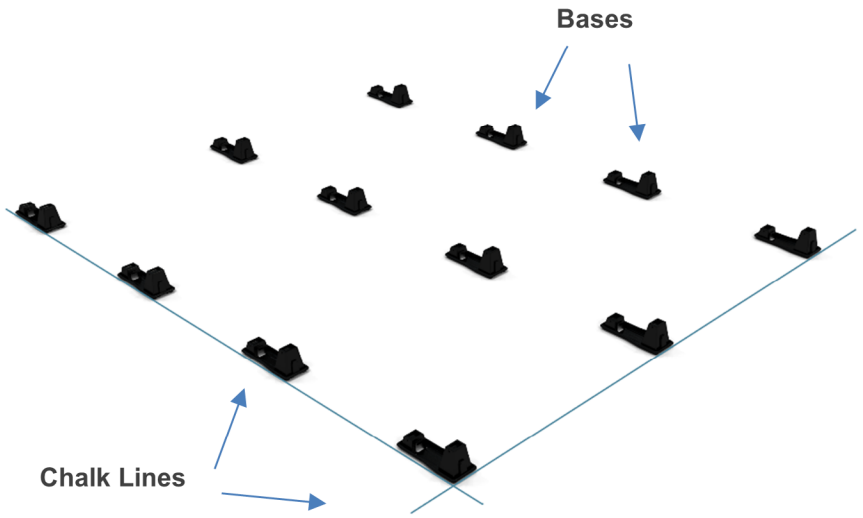


### Installation Tips

- As you build the array, panels will space the Bases. Roughly place a few rows of Bases at a time so that they are within reach of final location.

### Step 3 – Secure PV Modules onto Bases

- Place PV module onto EcoFoot5D Base.
- Space modules ½" apart using alignment marks located on the Clamps.

**Torque Nuts to 14 ft-lbs using a 1/2" deep socket.**

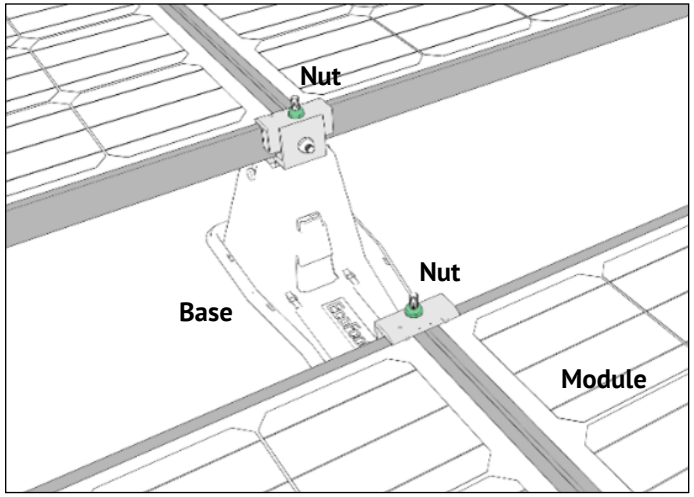


### Installation Tips

- After Step 3, wiring can be routed and secured.
- Wire clips or cables ties appropriately rated for PV applications (not included) can be inserted into slots along Base edge

### Step 4 – Install Mid-Support

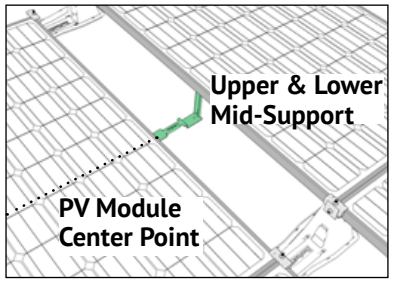


Locate module center point +/-1" using PV module cell lines.

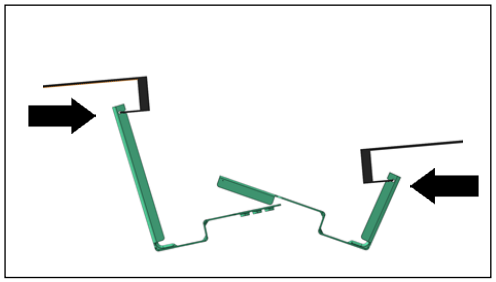

Slide the Upper and Lower Mid-Support slots onto module frame.

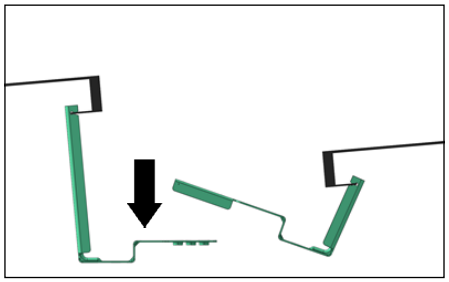

Press Upper down to sit flat on the roof.

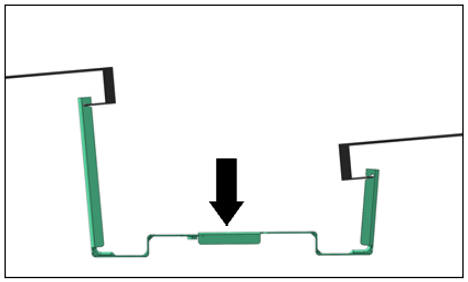

Press Lower down and snap onto tongue of upper.

**Note: Mid Support kits are used between rows and on the North and South array edges where ballast trays will be installed.**

### Step 5 – Install Ballast Tray and place ballast blocks on Tray

- Slide tray into retention clips located on the Base by sliding the Tray along the east-west direction.
- Secure tray to Mid-Support using 5/16" thread forming screw provided with Mid-Support Kit. **Torque Screw to 14 ft-lbs.**
- Place ballast (not included) in a single layer evenly dispersed along the length of Ballast Trays. Apply ballast per the ballast plan specified in the PE Certified Ballast Plan – Sheet S-1.0.

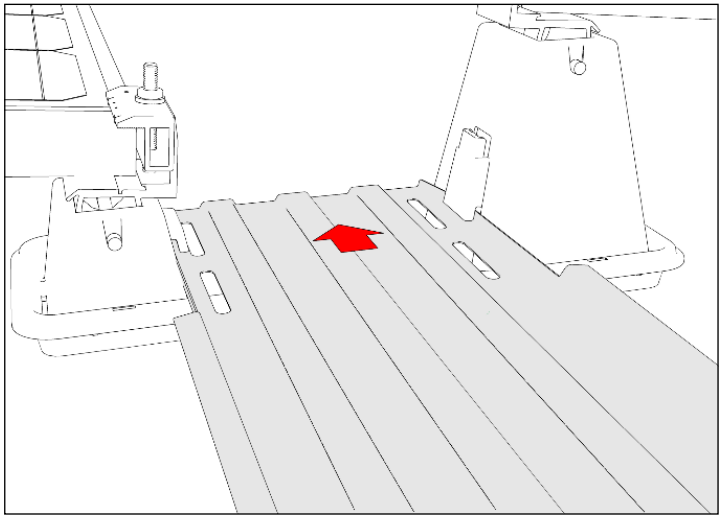

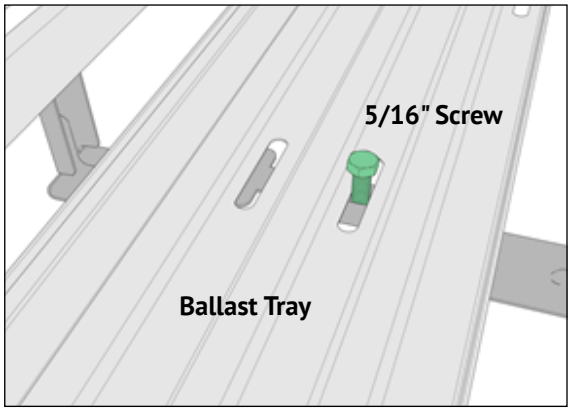


### Step 6 – Install Wind Deflector

Place Wind Deflectors into slot on EcoFoot5D Base and attach to Rocker using Nut provided.

**Torque Nut to 14 ft-lbs using a ½" deep socket.**
**Application of anti-seize on threaded stud recommended.**

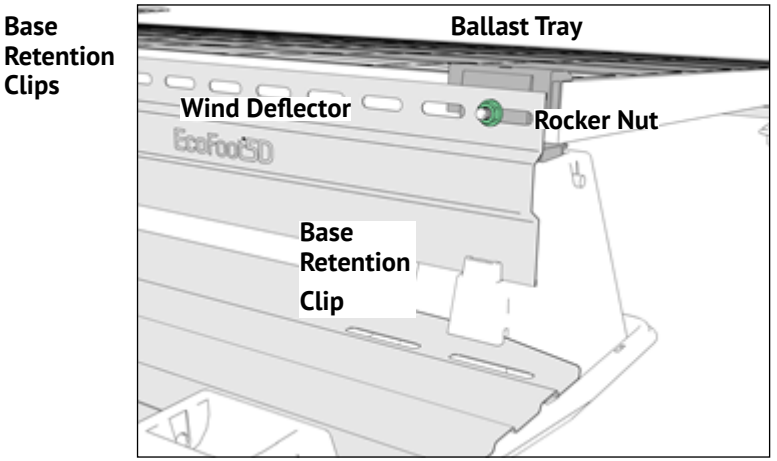


**NOTE:**
**For easier installation, when installing two deflectors in a single base, install the first deflector in the retention clip, install the second deflector between the other deflector and the base into the retention clip, and then slide both deflector slots over the threaded stud on the clamp and secure with rocker nut.**

## METHODS OF NORTH ROW INSTALLATION

The north row of EcoFoot5D arrays can be installed with Bases tucked under the modules using either of the methods described here.

### METHOD A: EcoFoot2+ BASES AND WIND DEFLECTORS

EcoFoot2+ Bases can be tucked under the north edge of EcoFoot5D arrays as shown in the diagram.

- Tilt angle of North row will be approximately 2 degrees higher than rest of array.
- Additional EcoFoot2+ Bases may be added to the center of the module frame if required for high snow loads or to hold additional ballast blocks.

**METHOD A: EcoFoot2+ BASE TUCKED ON NORTH EDGE**

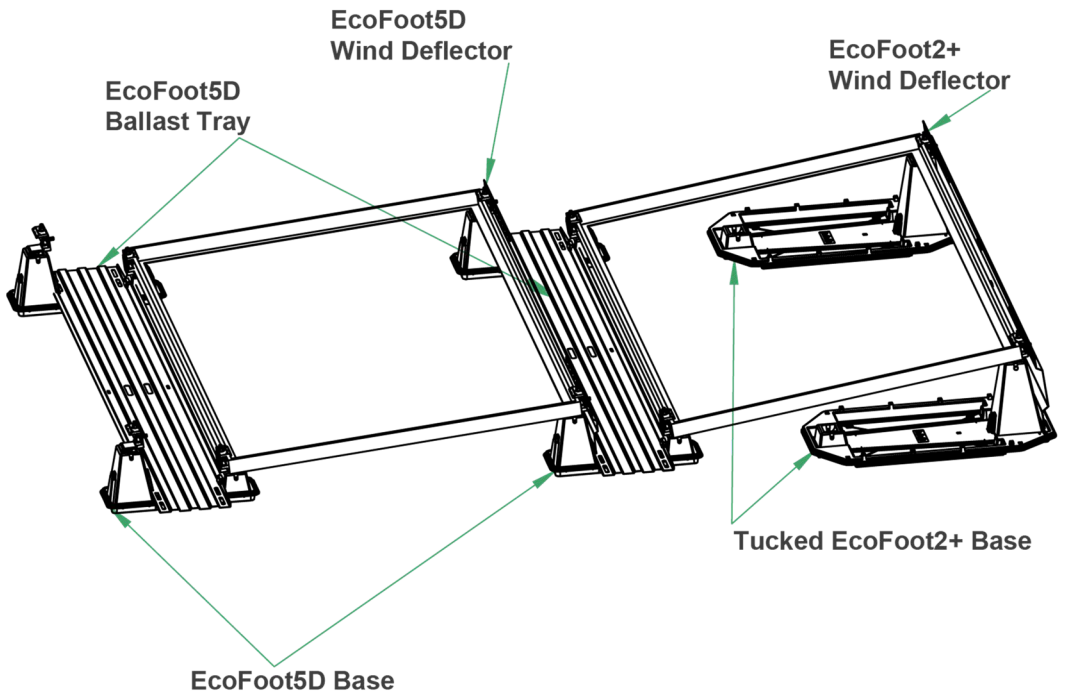

## Method B: EcoFoot5D Bases Attached

EcoFoot5D Bases can be tucked under the north edge of the north row and connected to anchored Strut. Strut runs East/West. See diagram below.

- Do not use Mid Supports and Ballast Trays on north row of tucked EcoFoot5D Bases.
- An additional EcoFoot5D Base may be added to the center of the module frame if required for high snow loads. The additional center Base does not need to be attached to the Strut.

**NOTE:**

**Some EcoFoot5D arrays are designed to be fully attached with strut running North/South. For fully attached systems, Mid supports and Ballast Trays are not needed. North edge Bases can be tucked and additional East/West strut attachment is not needed.**

**METHOD B: EcoFoot5D BASE TUCKED ON NORTH EDGE**

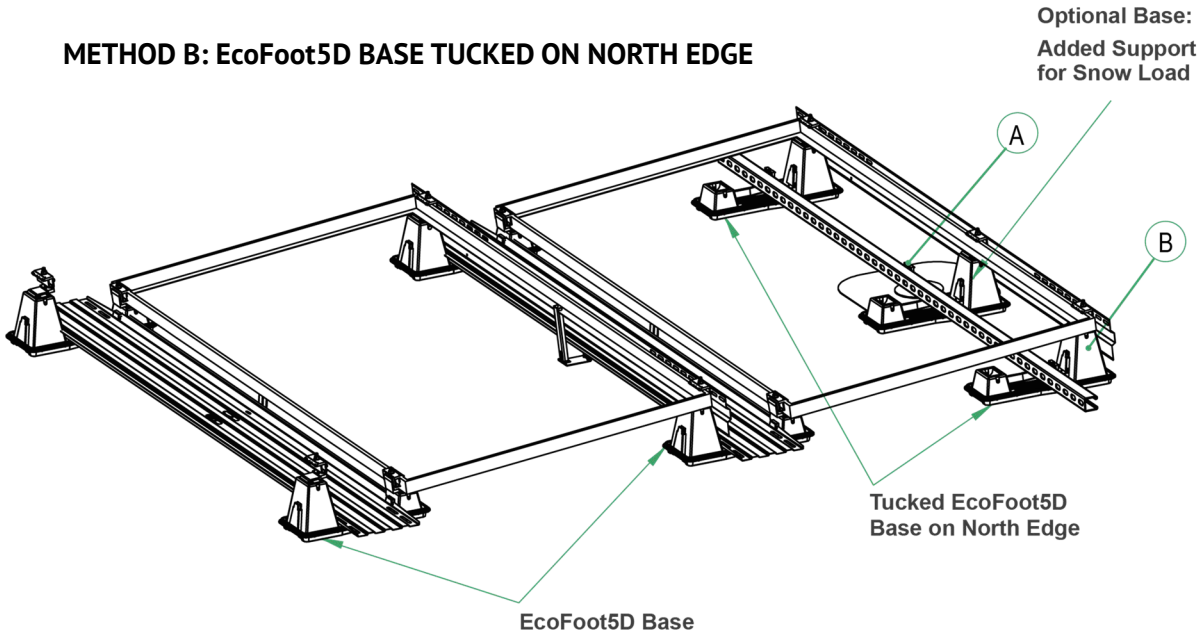


**DETAIL A:**
**Roof Attachment**

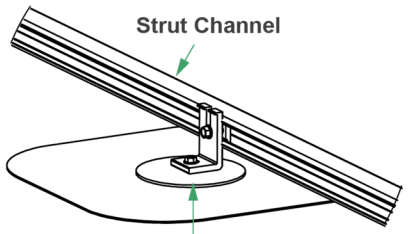


**DETAIL B:**
**Tucked EcoFoot5D Base on North Edge**

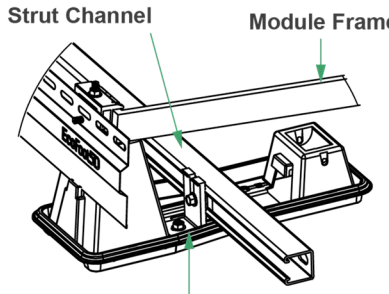


Use ES10788 Kit to attach Strut Channel to Bases and Roof Attachment

## INSTALLATION OF CLAMPS FOR STEPPED ARRAY

In solar arrays, at the outer edge of the array often a single Base is clamped to two PV modules on one row and a single PV module on the opposite row, creating a stepped edge. Clamps securing a single PV module are positioned differently than Clamps securing two PV modules. Follow the Clamp positioning instructions below:

***Example of one configuration of Stepped Array. At array edge, South Row has one less PV module than North Row, creating a stepped edge. Alternatively, Stepped Arrays may have the single PV module on the North Row.***

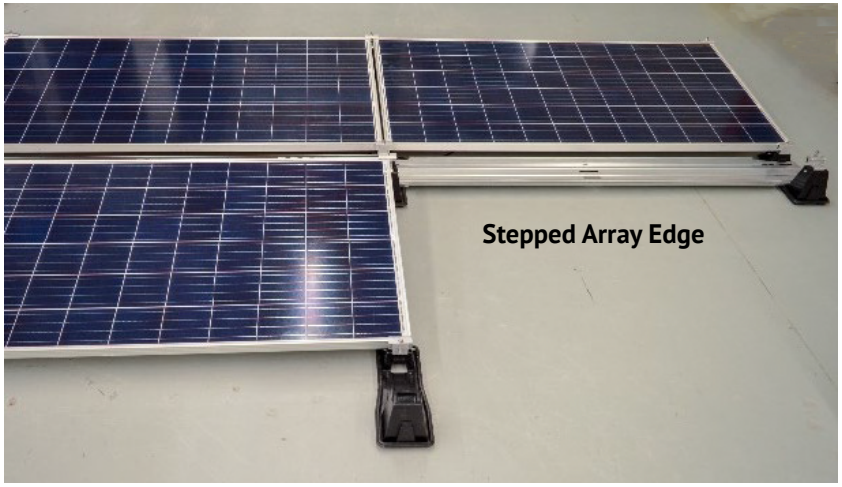


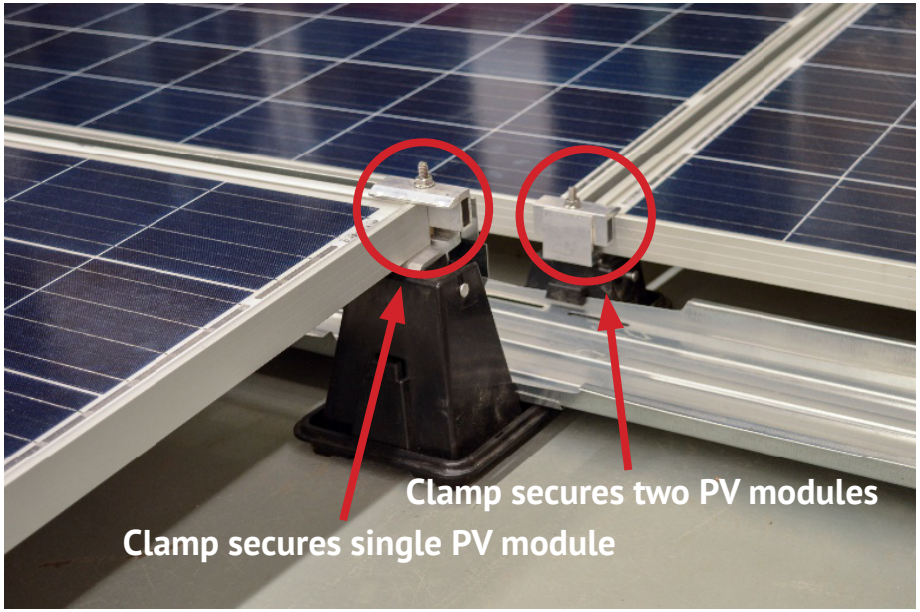

## CLAMPING TO SECURE SINGLE MODULE OF STEPPED ARRAY

- Position module to align with positioning dot at outer edge of Clamp. This will engage 1 ¾" of Clamp with module frame. Align Base as needed to position Clamp. Base will be slightly out of parallel.

**Torque Nut to 14 ft-lbs using a 1/2" deep socket.**

**⚠ CAUTION**

- **For clamps in a stepped array that are only securing a single PV module,it is required to install a bonding jumper from that module's frame to the correspoding wind deflector in order to ensure that the PV module is properly grounded. Unirac recommends using a listed bonding jumper from the module return flange to the wind deflector, such as the Unirac Wire Bonding Clip, P/N: 008015S**
- **Grounding methods must comply with NEC and local code requirements**

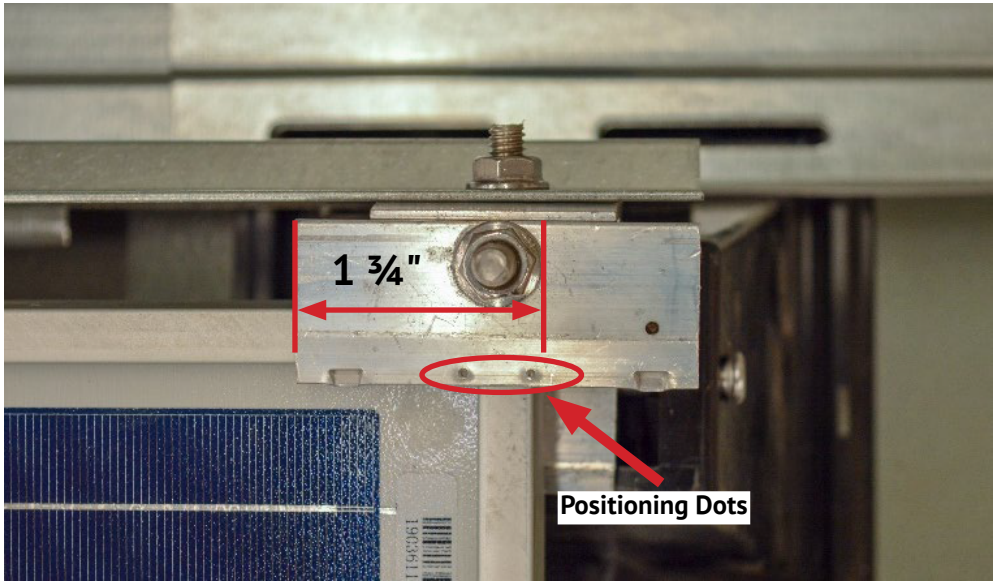


*Clamp Securing Single PV Module*

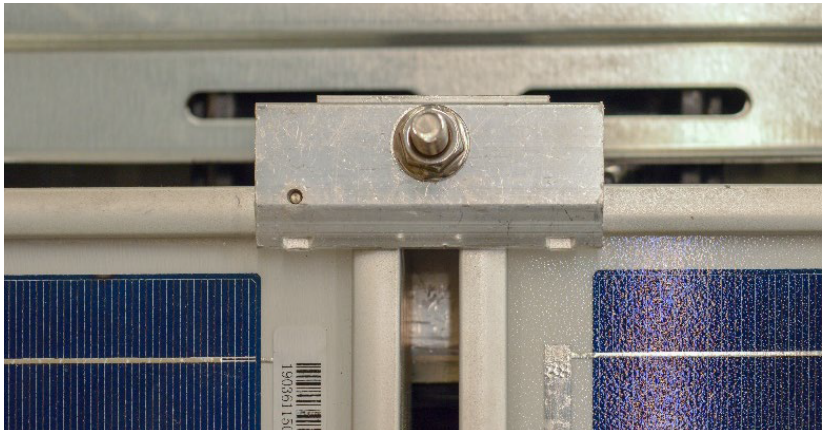

*Clamp Securing Two PV Modules*

## CLAMPING TO SECURE TWO MODULES OF STEPPED ARRAY

Position Clamp in typical two-module clamping position and torque Nut.

**Torque the nut to 14 ft-lbs.**

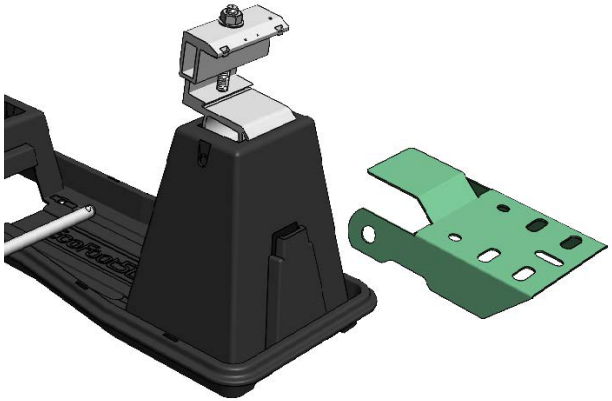

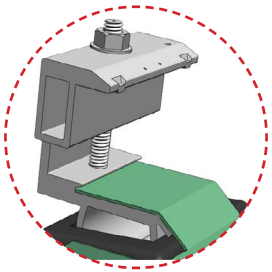

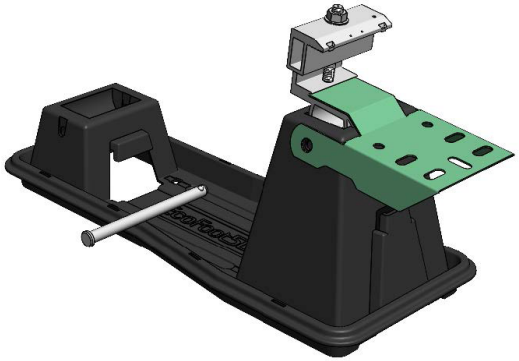

- Place EcoFoot MLPE Bracket on EcoFoot Universal Clamp as shown.
- Ensure MLPE Bracket should nest into Clamp's groove, as shown

- Insert Clevis Pin included with Universal Clamp Kit through EcoFoot MLPE Bracket, Base, and Clamp

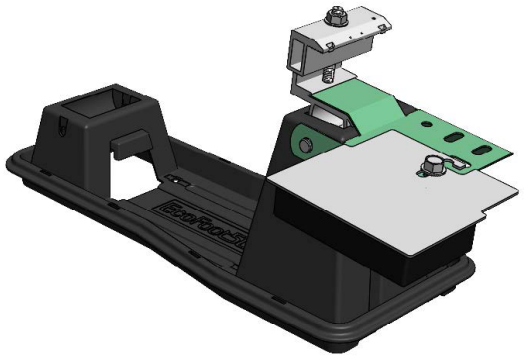

- Place MLPE on the MLPE Bracket and secure it with 5/16" serrated flange nut and bolt included in kit.

**Torque Value 14 ft-lbs**

## MODULE REMOVAL

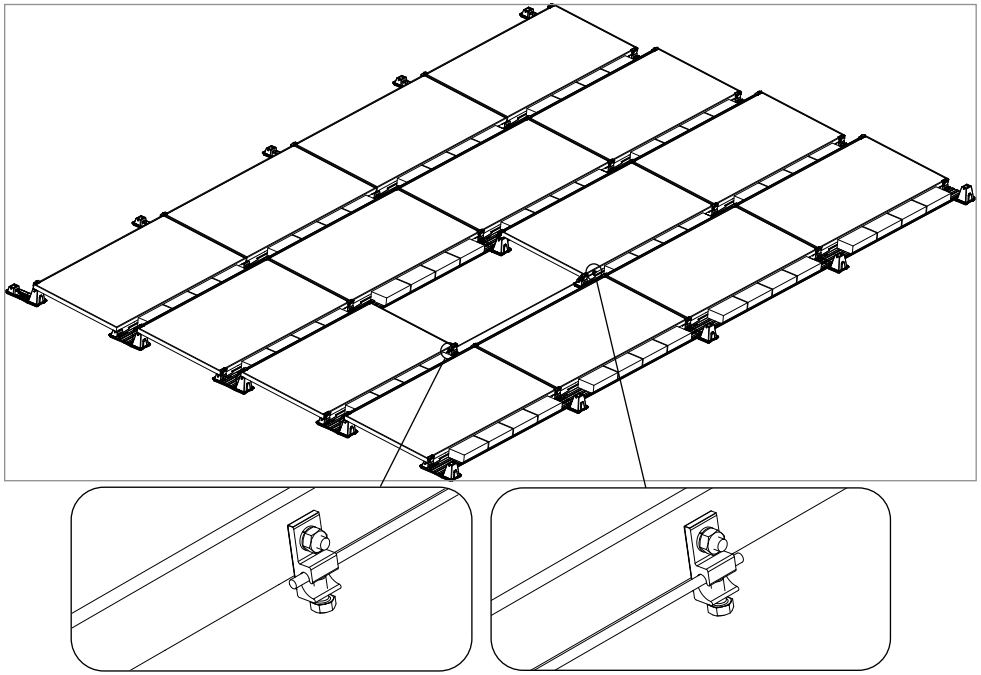

**⚠ CAUTION**

- **Module removal may disrupt the bonding path and could introduce the risk of electric shock.**
- **See Grounding and Bonding Paths section to determine when module removal may disrupt the bonding path.**
- **Follow Steps A through C to maintain the bonding path. Modules should only be removed by qualified persons in compliance with these instructions.**

**If a module is to be removed from an array, the following steps must be taken.**

**STEP A: Determine module to be removed**
Identify and mark the module to be removed.

**STEP B: Install ground lug on adjacent modules**
Install a WEEB Lug 6.7 on both modules adjacent to the module to be removed. Utilize the grounding hole on the frame of the module.

**STEP C: Connect Bonding Jumper**
Lay a bare #6 Copper conductor into the two lay in lugs connected to the adjacent modules. Tighten lay-in lug terminal screw onto the conductor and torque to 7 ft- lbs.
When wiring the array, keep bare copper from contacting bare aluminum.

The EcoFoot5D system is certified to UL 2703 for Grounding and Bonding when installed per the published installation instructions.

EcoFoot5D carries module-to-module ground bond through the Wind Deflector and Mid-Support.

Each row of modules/wind deflectors in an array of up to 400 modules must be grounded per the NEC and ANSI/NFPA 70 either through the designated ground hole in the Wind Deflector, or by drilling a ¼" ground hole into the Wind Deflector a minimum of ½" from any edge. One Ground Lug is required for every 400 modules connected within an array.

EcoFoot5D is intended to be used with PV modules that have a system voltage less than or equal to that allowable by NEC. For standard system grounding a minimum 10AWG, 105°C copper grounding conductor should be used to ground a system, according to the National Electric Code (NEC). It is the installer's responsibility to check local codes, which may vary. See below for Interconnection information

Unirac recommends using #6 copper ground wire in conjunction with WEEB grounding devices such as the WEEB-LUG-6.7 or WEEB DSK516.

**Lugs are a single use components.**

Other grounding methods must be reviewed and approved by a licensed master electrician or electrical engineer and Authority Having Jurisdiction (AHJ).

**Ground Hole with Lug Installed**

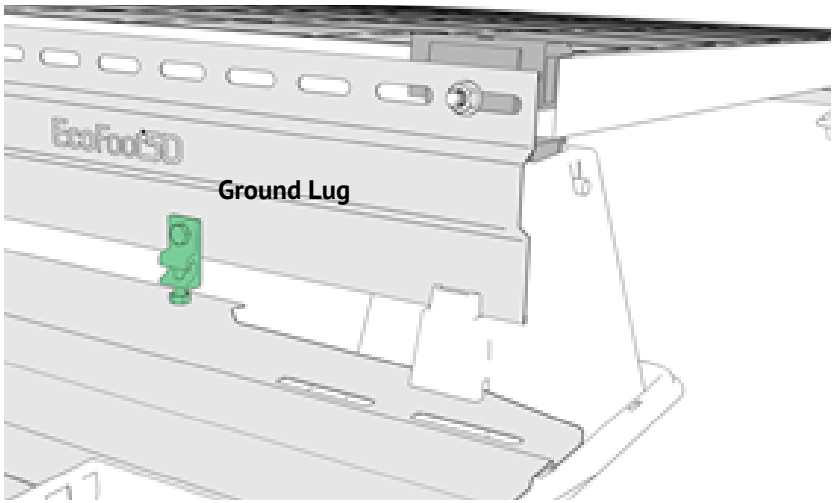


*Ground Lug is installed in the Wind Deflector either in the designated ground hole or by drilling a ¼" ground hole into the Wind Deflector a minimum of ½" from any edge. One Ground Lug is required for every 400 modules within an array.*

**Grounding and Bonding Path**

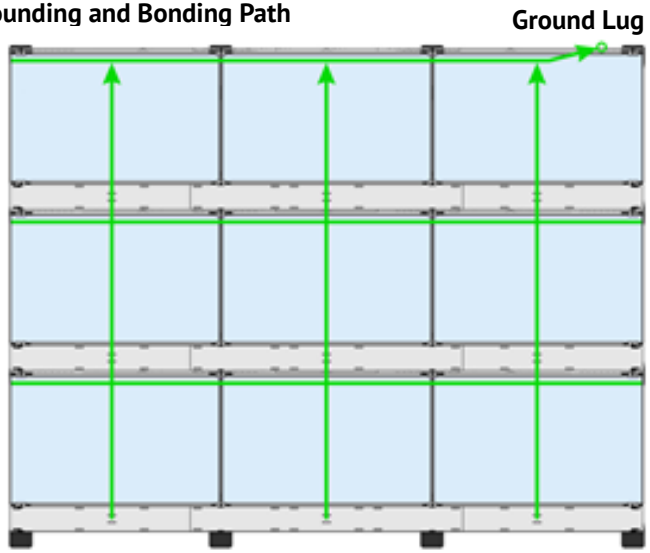


*Green lines represent ground bond path.*
*Wind Deflectors carry module-to-module east/west ground bond. Mid-Supports carry row-to-row north/south ground bond.*

**UL2703 System Label:** The label shown below is either stamped into the Wind Deflector or applied with an adhesive label.

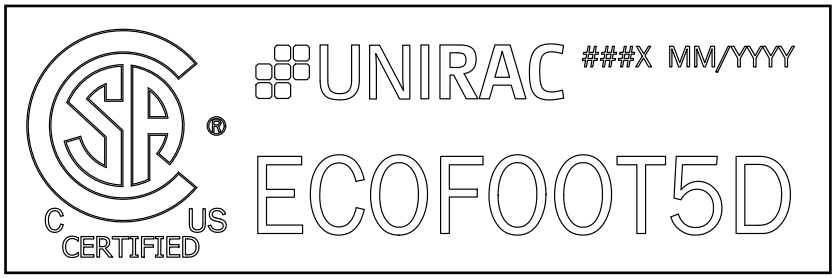


*The Date Code **###X MM/YYYY** shown above will appear on production parts, defined as follows:*

- ***###X** will be used to identify the source factory*
- ***MM** shall be the month of manufacture*
- ***YYYY** shall be the year of manufacture*

The Ecofoot5D system has been certified and listed to the UL 2703 standard (Rack Mounting Systems and Clamping Devices for Flat-Plate Photovoltaic Modules and Panels). This standard includes electrical grounding, electrical bonding, mechanical load and fire resistance testing.

In conducting these tests, specific modules are selected for their physical properties so that the certifications can be broadly applied. The following lists the specific modules that were tested and the applicability of those certifications to other modules that might come onto the market. PV modules may have a reduced mechanical load rating, independent of the Ecofoot5D load rating. Please consult the PV module manufacturer's installation manual for more information.

In addition to UL 2703 certification, Unirac performs internal testing beyond the requirements of certification tests in order to establish system functional limits, allowable loads, and factors of safety. These tests include functional system tests, and destructive load testing.

## MECHANICAL LOAD TEST MODULES

The modules selected for UL 2703 mechanical load testing were selected to represent the broadest range possible for modules on the market.
The tests performed cover the following basic module parameters:

- Frame thicknesses greater than or equal to 1.0 mm.
- Basic single and double wall frame profiles (some complex frame profiles could require further analysis to determine applicability).
- Clear and dark anodized aluminum frames.
- All installation configurations have achieved a minimum of 5psf design load in the downslope direction, tested with the Q Cells Q.PEAK DUO XL-G11.3/BFG module listed in this table

The following table lists the modules that have been mechanically load tested according to the UL 2703 standard

| Module Manufacturer | Model / Series | Area [sq ft] | Design Load [psf] |
|---|---|---|---|
| Boviet Solar | BVM6610 M | 17.51 | 11.8 up / 50 down |
| | BVM6612 M | 20.89 | 11.8 up / 42.9 down |
| Canadian Solar | CS6P-XXXM | 17.31 | 15.1 up / 30 down |
| | CS6X-XXXP | 20.65 | 13.6 up / 43.4 down |
| | CS6U-XXXM | 20.93 | 13.3 up / 42.8 down |
| | CS3W-MB-AG | 24.05 | 13.87 up / 27.17 down |
| | CS3U-MB-AG | 21.59 | 13.33 up / 38.85 down |
| ET Solar | ET-M672XXXWW | 20.86 | 13.4 up / 40 down |
| Hansol | HSXXXTD-AN4 | 21.46 | 13.4 up / 35 down |
| Heliene | 72M-XXX | 20.89 | 15 up / 40 down |
| Hyundai | HiS-MXXXTI | 21.06 | 10.2 up / 40 down |
| | HiS-MXXXRI | 21.06 | 15 up / 22.8 down |

| Module Manufacturer | Model / Series | Area [sq ft] | Design Load [psf] |
|---|---|---|---|
| Jinko | JKMXXXP-60 | 17.62 | 15 up / 45 down |
| | JKMXXXP-72 | 20.89 | 13.4 up / 42.9 down |
| | JKMxxxM-72HL4-TV | 27.78 | 17.93 Up / 17.35 Down |
| LG | LGXXXN2W-G4 | 21.10 | 13.3 up / 40 down |
| | LGXXXN2W-A5 | 22.31 | 12.5 up / 40 down |
| Longi | LR6-72HPH-XXXM | 21.48 | 15 up / 30 down |
| | LR6-72HV-XXXM | 20.86 | 13.4 up / 40 down |
| | LR4-72-HBD-XXX | 23.4 | 16.7 up / 21.3 down |
| Q Cells | Q.PRO BFR-G4 | 17.98 | 13.5 up / 49.8 down |
| | Q.PLUS L-G4.2 | 21.46 | 10.2 up / 33 down |
| | Q.PEAK DUO L-G8.3 | 23.06 | 17.16 up / 27.45 down |
| | Q.PEAK DUO XL-G10.3 / BFG | 24.93 | 16.7 up / 23.3 down |
| | Q.PEAK DUO XL-G11.3/BFG | 29.49 | 14.4 up / 26.93 down |
| REC | RECXXXTP2 | 17.97 | 15 up / 49.8 down |
| | RECXXXTP2S 72 | 21.60 | 13 up / 35 down |
| | RECXXXTP2S 72 XV | 21.6 | 15 up / 40 down |
| ReneSola | JCXXXM-24/Ab | 20.89 | 13.4 up / 30 down |
| S-Energy | SNXXXP-15 | 21.00 | 10 up / 30 down |
| Silfab | SLGXXXM | 21.00 | 13.1 up / 30 down |
| | SLA-P XXX | 17.58 | 13.3 up / 40 down |
| | SIL-XXXNU | 21.94 | 17.7 up / 31.4 down |
| SolarWorld | SW Poly Pro | 18.04 | 15.1 up / 30 down |
| Talesun | TP672M-XXX | 20.91 | 12 up / 30 down |
| Trina | TSM-XXX PA05.08 | 17.64 | 15.1 up / 30 down |
| | TSM-XXXDE14A(II) | 20.93 | 13.4 up / 40 down |
| | DE18M(II) | 25.94 | 19.85 up / 19.75 down |
| VSUN | VSUNXXX-72MH | 21.38 | 13.33 up / 18.1 down |
| Yingli | YGE 60 | 17.58 | 15.1 up / 30 down |
| ZN Shine | ZXM6-72 | 21.4 | 13.33 up / 13.33 down |
| | ZXM7-SHLDD144 | 27.96 | 16.57 up/ 23.67 down |

The following table lists the modules that have been mechanically load tested according to the CSA TIL NO. A-40 standard

| Module Manufacturer | Model / Series | Area [sq ft] | Design Load [psf] |
|---|---|---|---|
| Jinko | JKMxxxM-72HL4-TV | 27.78 | 17.93 Up / 17.35 Down |

## Electrical Bonding and Grounding Test Modules

The list below is not exhaustive of compliant modules but shows those that have been evaluated and found to be electrically compatible with the EcoFoot2+ ™ system.

| Manufacture | Module Model / Series |
|---|---|
| Aionrise | AION60G1<br>AION72G1 |
| AMPS | AMPS-xxxN-108BB<br>AMPS-xxxP-54BB |
| Aptos | DNA-120-BF26<br>DNA-120-MF10<br>DNA-120-MF26<br>DNA-144-BF10-xxxW-DG |
| Astronergy | ASM6612P Series<br>CHSM72M(DG)/F-BH<br>CHSM72N(DG)/F-BH |
| Auxin | AXN10Mxxx<br>AXNG1M SERIES |
| Axitec | AC-xxxMBT/144V<br>AC-xxxMH/144V<br>AC-xxxTGB/108BB<br>AC-xxxTGB/144TS<br>AC-xxxTGB/144WS-US<br>AC-xxxTGB/96BB<br>AXIbipremium XXL HC MW<br>AXIpremium XXL HC |
| BenQ Solar | PMxxxP01 |
| Bila Solar | AA550US-6x24GG |
| Boviet | BVM661(0/2) M (BB)-xxx<br>BVM661(0/2) M-xxx<br>BVM661(0/2) P -xxx<br>BVM661(0/2) P-xxx (BB)<br>BVM6610M-xxxS-H-HC<br>BVM6610M-xxxS-H-HC-BF |
| Canadian Solar | CS1Y-MS |

| Manufacture | Module Model / Series |
|---|---|
| Canadian Solar (Cont.) | CS3N MS<br>CS3U-MB-AG<br>CS3U-MS-AG<br>CS3W-MB-AG<br>CS3W-MS<br>CS3W-PB-AG<br>CS3Y-MB-G<br>CS6.1-54TM-H<br>CS6.2-48TM-xxxH<br>CS6K-xxx(M/P)<br>CS6P-xxx(M/P)<br>CS6R-MS-HL<br>CS6U-xxx(M/P)<br>CS6U-xxx(M/P) (1500V),<br>CS6W-MB-AG<br>CS6W-xxx-TB-AG<br>CS6X-xxx(M/P) |
| CertainTeed | CT54M10XXX-N07<br>CT72M10XXX-N07<br>CTM10xxxHC11-09 (430-465 W)<br>CTTCxxxHC12-08<br>CTxxxHC11-06 |
| EMMVEE | ExxxHCBG144-T<br>ExxxHCBT144-T |
| Energy America | ZLK-xxx |
| Es Foundry | ES-DN8-H72-xxx<br>ES-DP8-H72-xxx |
| ET Solar | ET-(M/P)660xxx(WW/WB/BB)<br>ET-N772TBHxxxGL |
| Fellow Energy | FE72-18X(ND) |

| Manufacture | Module Model / Series |
|---|---|
| Freevolt | PVGraf |
| Gstar Solar | GSD7S54T-xxxBT<br>GSP7G54M(H) |
| Hansol | HSxxxTD-AN4<br>HSxxxTD-AN3<br>HSxxxUD-AN1 |
| Heliene | 108HC M10 SL All Black Module<br>132HC M10 SL Monofacial Module<br>144HC M10 NTYP SL Bifacial Module<br>144 HC M10 SL-Bifacial,<br>144HC M10 SL Monofacial<br>60(P/M)-xxx, 60M-xxx (BLK) HOME PV<br>72M-xxx (BLK), 72P-xxx,<br>HSPE-132HC-M10-SL-Monofacial |
| HT-SAAE | HT72-18X(ND)-F |
| Hyundai | HiN-TxxxNF(BK)<br>HiN-TxxxNI<br>HiS-(M/S)xxx (RI/TI)<br>HiS-SxxxGI<br>HiS-SxxxKI<br>HiS-SxxxYH(BK) |
| Imperial Star | ISM7-SHDD120-xxx/M |
| INDEPWR Solar | iPWR-M10-54BX2S-xxxW<br>iPWR-M10-60BX2S-xxxW |
| JA Solar | JAM54D41-xxx/MB<br>JAM54S31 xxx/MR<br>JAM72D10 xxx/MB<br>JAM72D30 xxx/MB (2278mm or 2285mm) |

- Unless otherwise noted, all modules listed above include all wattages and specific models within that series. Variable wattages are represented as "xxx"
- Items in parenthesis are those that may or may not be present in a compatible module's model ID
- Slashes "/" between one or more items indicates that either of those items may be the one that is present in a module's model ID
- The frame profile must not have any feature that might interfere with the bonding devices that are integrated into the racking system
- Use with a maximum over current protection device OCPD of 30A
- Listed models can be used to achieve a Class A fire system rating, for low slope applications, when modules fire typed 1, 2, 3 with a metal frame, 19, 22, 25, and modules typed 29, 30 and 38

## Electrical Bonding and Grounding Test Modules

The list below is not exhaustive of compliant modules but shows those that have been evaluated and found to be electrically compatible with the EcoFoot2+ ™ system.

| Manufacture | Module Model / Series |
|---|---|
| JA Solar (Cont.) | JAM72S01-xxx/PR<br>JAM72S09-xxx/PR<br>JAM72S10/MR<br>JAM72S10-xxx/PR<br>JAM72S30xxx/MR<br>JAM78D10 /MB<br>JAP72S01-xxx/SC<br>JAP72S09-xxx/SC |
| Jinko Solar | JKMxxxM-6RL3-B<br>JKMxxxM-72HL-V<br>JKMxxxM-7RL3-TV<br>JKMxxxN-72HL4-BDV (30mm & 35mm Frame Height)<br>JKMxxxN-72HL4-TV<br>JKMxxxP-60/72 |
| LA Solar | LSxxxBF (530-550 watt range)<br>LSxxxBL (410 watt)<br>LSxxxBL (430-450 watt range)<br>LSxxxBL (530-550 watt range)<br>LSxxxHC (430-450 watt range) |
| LG Electronics | LGxxx(A/M/N/Q)1C-A6<br>LGxxx(M/N/Q)1K-A6<br>LGxxx(N/Q)1C-N5<br>LGxxx(N/Q)1C-V5<br>LGxxx(N/Q)1K-V5<br>LGxxx(N/S)1C- (A5/G4)<br>LGxxx(N/S)2W-(A5/B3/G4)<br>LGxxxN1K-A5<br>LGxxxN1K-L5<br>LGxxxN2T-E6<br>LGxxxN2T-L5<br>LGxxxN2W-E6 |

| Manufacture | Module Model / Series |
|---|---|
| LG Electronics(Cont.) | LGxxxN2W-L5<br>LGxxxNX(W/T)-V5<br>LGxxxQ1K-N5,<br>LGxxxQAC-A6<br>LGxxxQAK-A6 |
| LONGi | LR4-72-HBD-xxx<br>LR4-72HBD xxxM<br>LR4-72HPH<br>LR5-54-HPB-xxxM<br>LR5-54HTB xxxM<br>LR5-66HPH<br>LR5-72HBD<br>LR5-72HPH<br>LR6-72HPH-xxxM<br>LR6-72HV-xxxM<br>LR6-72-xxxM<br>LR8-54HGBB |
| Maxeon | SPR-MAX6-xxx<br>SPR-MAX6-xxx-BLK |
| Meyer Burger | Black, White |
| Mission Solar Energy | MSExxxHT0B<br>MSExxxSX5K<br>MSExxxSX5T<br>MSExxxSX9R<br>MSExxxSX9Z<br>MSH10-xxxHN4G<br>MSH10-xxxHN4G-DC11<br>MSH10-xxxHT4T<br>MSI10-xxxHN4G<br>MSI10-xxxHT4G<br>MSI10-xxxHT4T |

| Manufacture | Module Model / Series |
|---|---|
| Mission Solar Energy(Cont.) | MSN10xxxHT4T<br>MSX10-xxxHN0B |
| mSolar | TXI10-xxx108BB |
| NE Solar | NESE xxx 72MHB-M10<br>NESE xxx 72THB-M10<br>NESE xxx 72MHT-M10 |
| Panasonic | EVPVxxx(K/PK/H)<br>EVPVxxxHK<br>EVPVxxxHK2 |
| Philadelphia Solar | PS-M144(HCBF)<br>PS-MNB108(HCBF)-xxxW<br>PS-MNB144(HCBF)-xxxW |
| Phono Solar | PSxxxM8GFH-24TNH |
| Q Cells | B.LINE (PRO or PLUS) BFR G4.1 xxx<br>Q.(PLUS/PEAK) (L/BFR)-G4.1 xxx<br>Q.(PLUS/PEAK) (L /BFR)-G4.2 xxx<br>Q.(PRO or PLUS) BFR-G4.1 xxx<br>Q.PEAK (BLK or BFR) G4.1/TAA xxx<br>Q.PEAK BLK G4.1 xxx Q.(PRO or PLUS) G4 xxx<br>Q.PEAK DUO BLK ML-G10+<br>Q.PEAK DUO BLK ML-G10.a+<br>Q.PEAK DUO BLK ML-G10.B+<br>Q.PEAK DUO BLK ML-G10.C+<br>Q.PEAK DUO-G10(+)<br>Q.PEAK DUO BLK ML-G10.C1+/AC<br>Q.PEAK DUO BLK ML-G10+/AC<br>Q.TRON BLK M-G2(.H1)(.F1)(.C1)+/AC<br>Q.PEAK DUO XL-(G10.2, G10.3, G10.c or G10.d)<br>QPEAK DUO G10.C1+ AC |

- Unless otherwise noted, all modules listed above include all wattages and specific models within that series. Variable wattages are represented as "xxx"
- Items in parenthesis are those that may or may not be present in a compatible module's model ID
- Slashes "/" between one or more items indicates that either of those items may be the one that is present in a module's model ID
- The frame profile must not have any feature that might interfere with the bonding devices that are integrated into the racking system
- Use with a maximum over current protection device OCPD of 30A
- Listed models can be used to achieve a Class A fire system rating, for low slope applications, when modules fire typed 1, 2, 3 with a metal frame, 19, 22, 25, and modules typed 29, 30 and 38

## Electrical Bonding and Grounding Test Modules

The list below is not exhaustive of compliant modules but shows those that have been evaluated and found to be electrically compatible with the EcoFoot2+ ™ system.

| Manufacture | Module Model / Series |
|---|---|
| Q Cells(Cont.) | Q.PEAK DUO BLK ML-G10.D+<br>Q.PEAK DUO BLK ML-G10.D1+/AC<br>Q.PEAK DUO XL-(G10.3 or G10.d)/BFG<br>Q.PEAK DUO XL-G11.3/BFG<br>Q.PEAK-G4.1 (MAX) xxx<br>Q.PEAK L (G4.2 or G4.5)<br>Q.PLUS BFR G4.1/MAX xxx<br>Q.PLUS L G4.2,<br>Q.PRO BFR-G4/G4.3 xxx<br>Q.PRO EC-G4.4 xxx, Q.PEAK DUO BLK-(G9(+) or G10(+)) Q.PEAK DUO L-(G5.1, G5.2, G6, G6.1, G6.2, G6.3, G7.1, G7.2, G8, G8.1, G8.2 or G8.3) Q.PLUS DUO L-(G5.1or G5.2)<br>Q.TRON BLK M-G2+<br>Q.TRON BLK M-G2+/AC<br>Q.TRON BLK M-G2+ AC<br>Q.TRON BLK M-G2.C+<br>Q.TRON BLK M-G2.D1+/AC<br>Q.TRON BLK M-G2.F+<br>Q.TRON BLK M-G2.F1+/AC<br>Q.TRON BLK M-G2.H+<br>Q.TRON BLK M-G2.H1+/AC<br>Q.TRON BLK M-G2+ SERIES<br>Q.TRON M-G2+ SERIES<br>Q.TRON ML-G3.3/BFG<br>Q.PEAK DUO BLK ML-G10.XY+/AC (where “X” = any letter between A to W, where “Y” = any number between 1 to 9.) |

| Manufacture | Module Model / Series |
|---|---|
| REC | RECxxx(TP, PE, TP2 or NP )<br>RECxxx(TP, PE, TP4 or NP2 ) (BLK)<br>RECxxxTP2 (BLK/BLK2)<br>RECxxxAA<br>RECxxxAA 72<br>RECxxxAA Black<br>RECxxxAA Pro M<br>RECxxxAA Pure<br>RECxxxAA Pure 2<br>RECxxxAA Pure R<br>RECxxxAA Pure-RX<br>RECxxxAA PURE-RX-DC<br>RECxxxNP3 Black<br>RECxxxTP2S 72 |
| ReneSola | JCxxxM -24(Ab or Bb),<br>RS6-xxxNBG-E3 |
| Risen Solar | RSM144-6-xxxBMDG |
| Runergy | HY-DH96N11B |
| SEG Solar | SEG-xxx-BTA-BG<br>SEG-xxx-BTB-BG<br>SEG-xxx-BTD-BG |
| S-Energy | SL40-60MAI/MBI/MCI-xxxV<br>SNxxx(M/P)-10 (40T)<br>SNxxxP-15, SNxxx(M/P)-10 |
| Seraphim | SRP-xxx-BMD-HV<br>SRP-xxx-BTA-BG<br>SRP-xxx-BTB-BG<br>SRP-xxx-BTD-BG<br>SRP-xxx-BTE-BG |

| Manufacture | Module Model / Series |
|---|---|
| Silfab | SIL-xxx BG<br>SIL-xxx BK<br>SIL-xxx HC+<br>SIL-xxx HM<br>SIL-xxx HN<br>SIL-xxxNU<br>SIL-xxx QD<br>SIL-xxx QM<br>SIL-xxx XM<br>SIL-xxx XM+<br>SLA-(P, M or X) xxx<br>SLG-(P, M or X) xxx<br>SSA-(P or M) xxx<br>SSG-(P or M) xxx |
| Sirius PV | ELNSM54M-HC-BF Series<br>ELNSM54M-HC-N<br>ELNSM54M-HC Series |
| Solar4America | S4A550-144MH10STT<br>S4Axxx-108MH10BB |
| Solar Space | SS8-54HDB-xxx-N<br>SS8-54HD-xxx-N<br>SS8-72HD-xxx-M<br>SS8-72HD-xxx-N<br>SSA-48HDB-xxx-N<br>SSA-48HD-xxx-N<br>SSA-54HDB-xxx-N<br>SSA-54HD-xxx-N |
| SolarWorld | Sunmodule Plus SW Mono<br>Sunmodule Protect SW Mono<br>SW Poly Pro, SW Poly 2.5 |

- Unless otherwise noted, all modules listed above include all wattages and specific models within that series. Variable wattages are represented as "xxx"
- Items in parenthesis are those that may or may not be present in a compatible module's model ID
- Slashes "/" between one or more items indicates that either of those items may be the one that is present in a module's model ID
- The frame profile must not have any feature that might interfere with the bonding devices that are integrated into the racking system
- Use with a maximum over current protection device OCPD of 30A
- Listed models can be used to achieve a Class A fire system rating, for low slope applications, when modules fire typed 1, 2, 3 with a metal frame, 19, 22, 25, and modules typed 29, 30 and 38

## Electrical Bonding and Grounding Test Modules

The list below is not exhaustive of compliant modules but shows those that have been evaluated and found to be electrically compatible with the EcoFoot2+ ™ system.

| Manufacture | Module Model / Series |
|---|---|
| Sonali | SS-M-360 to 390 & 440 to 460 Series<br>SS-M-430 to 460 BiFacial Series |
| Sunket Solar | SKT580M10-144S2 |
| SunPlus Optimum | SR4-54HTB-xxxM |
| SunPower | A440-COM-MLSD |
| Sunpro Power | SPDGxxx-120M12<br>SPDGxxx-N108M10<br>SPDGxxx-N144M10 |
| Talesun | (+/- Hipro Mxxx+ or PID ZERO)<br>TP672(M or P) TD6I72M<br>TD7G72M<br>TM3G48M<br>TM3G54M<br>TM7G60M<br>TM7G72M<br>TP6F72M<br>TP6F72M(H) |
| Tesla | Tesla Solar Panel<br>TSP-415/TSP-420<br>TxxxH<br>TxxxS |
| Thornova | TS-BBT54(xxx)<br>TS-BGT72(xxx) |

| Manufacture | Module Model / Series |
|---|---|
| Trina | DE09.05<br>DE18M(II)<br>DEG15HC.20(II)<br>DEG15MC.20(II)<br>DEG18MC.20(II)<br>TSM-DE15H(II)<br>TSM-DE15M(II)<br>TSM-NE09RH.05<br>TSM-NEG9RH.25<br>TSM-xxxDD14A(II)<br>TSM-xxxDE14A(II)<br>TSM-xxx PA05.08<br>TSM-xxxPD14<br>TSM-xxxPE14A |
| Vikram | PARADEA VSMDH.72.AAA.05<br>PREXOX VSMDHT.60.AAA.05<br>VSMDHT.72.AAA.05 |
| VSUN | VSUNxxx-108MH<br>VSUNxxx-120BMH<br>VSUNxxx-144BMH<br>VSUNxxx-144BMH-DG<br>VSUNxxx-60M<br>VSUNxxx-72MH<br>VSUNxxx-72PH<br>VSUNxxxN-108BMH-BB<br>VSUNxxxN-108BMH-BB (SoftPaw)<br>VSUNxxxN-120BMH-BB (SoftPaw) |
| Waaree | Bi-55-xxx<br>BiN-08-xxx |
| Yingli | YLxxxC-30b<br>YLxxxP-29b |

| Manufacture | Module Model / Series |
|---|---|
| ZN Shine | ZXM6-60<br>ZXM6-72<br>ZXM6-NHLDD144<br>ZXM7-SHDB144<br>ZXM7-SHLDD144<br>ZXM7-UHLDD108<br>ZXM7-UHLDD144<br>ZXP6-72 |

- Unless otherwise noted, all modules listed above include all wattages and specific models within that series. Variable wattages are represented as "xxx"
- Items in parenthesis are those that may or may not be present in a compatible module's model ID
- Slashes "/" between one or more items indicates that either of those items may be the one that is present in a module's model ID
- The frame profile must not have any feature that might interfere with the bonding devices that are integrated into the racking system
- Use with a maximum over current protection device OCPD of 30A
- Listed models can be used to achieve a Class A fire system rating, for low slope applications, when modules fire typed 1, 2, 3 with a metal frame, 19, 22, 25, and modules typed 29, 30 and 38