EcoFoot2+

10-DEGREE BALLASTED RACKING SYSTEM

INSTALLATION MANUAL

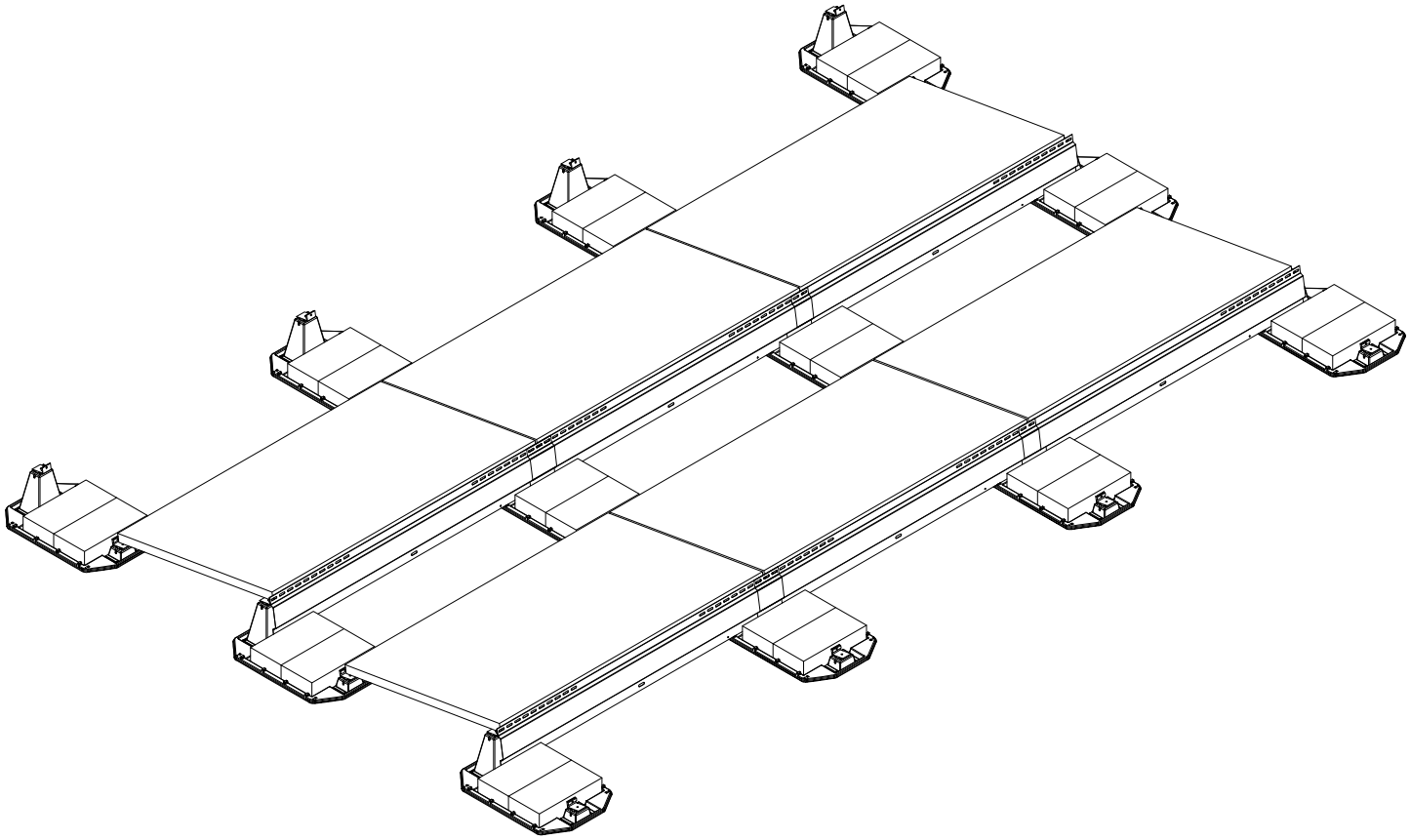

UNIRAC Code-Compliant Installation Manual

© 2022 by Unirac, Inc. All rights reserved.

UNIRAC welcomes input concerning the accuracy and user-friendliness of this publication. Please write to publications@unirac.com.

PUB2026OCT13

EcoFoot2+

10-DEGREE BALLASTED RACKING SYSTEM

INSTALLATION MANUAL

TABLE OF CONTENTS

LEGAL NOTICES 1
INTRODUCTION 2-3
WARNINGS AND SAFETY 4
GENERAL APPLICATION NOTES 5-6
SYSTEM COMPONENTS 7-8
SYSTEM INSTALLATION STEPS 9-13
MID SUPPORT INSTALLATION 14-15
STEPPED ARRAY INSTALLATION 16-17
MLPE BRACKET INSTALLATION 18
MODULE REMOVAL 19
GROUNDING AND BONDING PATHS 20
CODE COMPLIANCE NOTES 21
MECHANICAL LOAD TEST 22-24
COMPATIBLE MODULES 25-28

Legal Notices

©2017 Unirac®, Inc. Unirac® and EcoFoot2+® are registered trademarks of Unirac, Inc.

Field Support Contact Information

Unirac proudly offers dedicated engineering expertise and superior customer support. For questions about the installation procedures or a specific application, please contact our Field Support Specialists at 866-488-6794 or FieldSupport@Unirac.com.
Installer Responsibility

The installer is solely responsible for:

- Utilizing all necessary safety equipment, as required by applicable rules and regulations.
- Complying with all applicable local and national building codes, including any that may supersede this manual.
- Ensuring that Unirac® EcoFoot2+® and other products are appropriate for the specific installation and are designed for the installation environment.
- Ensuring that the roof, its rafters, connections, and other structural support members can support the array under all conditions.
- Maintaining the waterproof integrity of the roof including selection of appropriate flashing if the system is being installed using attachments.
- Ensuring safe installation of all electrical aspects of the entire system

Disclaimer of Liability

Unirac® does not assume responsibility and expressly disclaims liability for loss, damage, or expense arising out of, or in any way connected with installation, operation, use, or maintenance by using this manual.

Unirac assumes no responsibility for any infringement of patents or other rights of third parties, which may result from use of modules. No license is granted by implication or under any patent or patent rights. The information in this manual is believed to be reliable, but does not constitute an expressed and/or implied warranty.

Unirac reserves the right to make changes to the product, specifications, data sheets and this manual without prior notice. This document is not prescriptive regarding safety and does not purport to address all the safety concerns that may arise with its use. Contractors should become familiar with all applicable safety, health, and regulatory requirements before beginning work.

Unauthorized field modification of Unirac components or assemblies may affect Unirac warranty coverage. Provide written drawings for Unirac's review, comment and approval prior to attempting any field modifications.

Warnings & Safety

Both electrical and roofing knowledge are required to correctly and safely install a solar photovoltaic system. Only qualified and certified installation professionals should install EcoFoot2+. Failure to follow the methods and procedures outlined in this guide may result in injury and/or damage to property.
Carefully read this guide before starting any work. Store a copy of this guide on the job site at all times and contact Unirac with any installation questions related to EcoFoot2+.



Please note the following warnings when installing EcoFoot2+:

- EcoFoot2+ components fit together tightly and could cause pinch injuries.
- EcoFoot2+ components may be hot to the touch if left in the sun.

Please follow the safety requirements below when installing EcoFoot2+:

- Always keep children and unauthorized people away from work areas.
- Always wear required OSHA approved Personal Protective Equipment (PPE).
- Always use insulated tools when working with or near electrical systems.
- Always provide OSHA approved fall protection for all installation personnel.
- Never wear jewelry during mechanical and electrical installation work.
- Never work in rain, snow or extremely windy conditions.
- Never leave a module unsupported or unsecured on the roof.
- Never install broken photovoltaic modules.
- Never use photovoltaic modules as a work surface.

EcoFoot2+ General Application Notes

Site-Specific System Design: Unirac provides drafting services on all EcoFoot2+ projects. This service produces a site-specific design package with an Engineered Stamped Layout including detailed ballast plan and bill of materials.

Roof Type: EcoFoot2+ is designed to mount photovoltaic modules to a range of roof surfaces, including: EPDM, TPO, PVC, Mineral Cap Sheet (a.k.a. Rolled Asphalt), Tar and Gravel.

Roof Slope Range: 0-7 degrees maximum, 3-degree limit for unattached seismic.

Wind Zone: EcoFoot2+ is designed to mount photovoltaic modules on flat roof surfaces with a maximum pitch of 7 degrees in areas with extreme wind conditions. Please contact Unirac for clarification or assistance.

Installation Requirements: EcoFoot2+ is ballasted photovoltaic racking designed as a system which requires all EcoFoot2+ components, the specific module, and ballast placement prescribed in the PE stamped design. The absence of any of these elements in any given sub-array could present a compromised condition on the roof. Arrays shall not be left unattended in such a state during an installation.

This install guide officially documents the components used and proper methods for an EcoFoot2+ installation. Bonding elements are incorporated into EcoFoot2+ components. As the system is built on the roof, components and modules are bonded together. Specific steps to ensure a bonded system are described through the installation guide. It is the installer's responsibility to ensure that the system is safely and properly installed, and that the system is bonded back to a final ground point.

When wiring the array, keep bare copper from contacting bare aluminum.

Thermal and Seismic Design Requirements: EcoFoot2+ is a flexible and expandable design that accommodates various array geometries.

Maximum widths for arrays are as follows:

- 60-cell modules, 26 modules in a row
- 72-cell modules, 22 modules in a row

Minimum spacing between sub-arrays is 6". Site specifics may further limit array sizes and spacing.

Re-Inspection: Unirac recommends periodic re-inspection of the installation for loose components, loose fasteners, and any corrosion, such that if found, the affected components are to be immediately replaced. Any components showing signs of damage that compromise safety shall be replaced immediately.

Compatible Modules: Unirac has evaluated many photovoltaic modules for installation compatibility with the EcoFoot 2+ 10-degree racking system. A list of compatible modules may be found in "EcoFoot2+ Install Guide Compatible Modules Page" on our website: www.unirac.com

UL2703 Qualification: In cases where UL 2703 certification is required, the EcoFoot2+ system conforms to the UL2703 Standard for grounding and bonding and fire ratings. The EcoFoot2+ system may be used to ground and/or mount a PV module complying with UL1703 or UL61730 only when the specific module has been evaluated for grounding and /or mounting in compliance with the included instructions.

EcoFoot2+ system is to be installed over a fire resistant roof covering rated for the application. EcoFoot2+ Racking maintains a Class A fire rating when installed in landscape orientation according to the installation instructions, on a low slope roof Class A roof with Type 1, Type 2, Type 3 module with a metal frame, Type 19, Type 22, Type 25, Type 29, Type 30 and Type 38. Contact Unirac with any questions about fire type compatibility.

Further information about Unirac's UL2703 Listing, including module load ratings may be found in Mechanical Load Test section of this manual.

EcoFoot2+ Core Components

A EcoFoot2+ Base

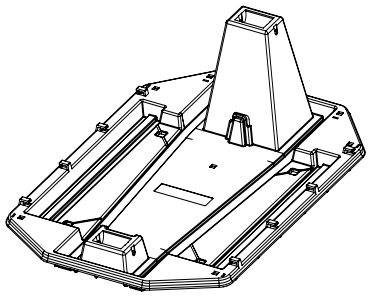

B Clamp-Lower

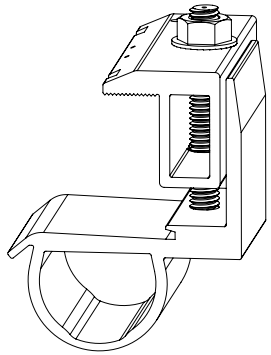

C Clamp-Upper

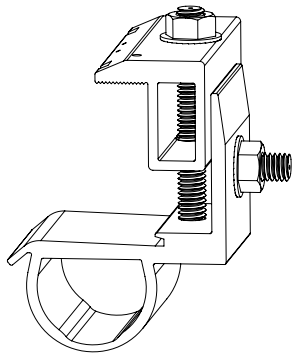

D Clevis Pin

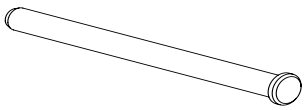

E Wind Deflector

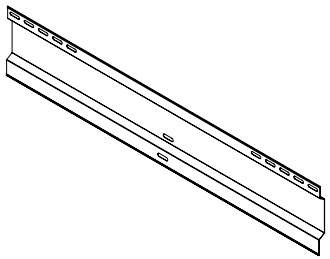

F Nut

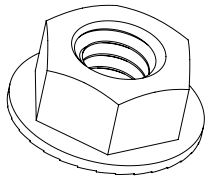

G Mid-Support Upper

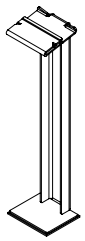

H Mid-Support Lower



C.ID.	DESCRIPTION	PART NUMBER
A	EcoFoot2+ Base	ES20207
B	Universal Clamp Lower	ES10459
C	Universal Clamp Upper	ES10458
D	Clevis Pins	ES10476-CP
E	Wind Deflector, 44"	ES20311A
	Wind Deflector, 56.375"	ES20311I
	Wind Deflector, 70"	ES20311B
	Wind Deflector, 82"	ES20311C
	Wind Deflector, 86"	ES20311H
	Wind Deflector, 92"	ES20311K
F	Nut	ES10277
G	Mid-Support Upper	ES11207
H	Mid-Support Lower	ES11208

C.ID. - Component Identifying Number

EcoFoot2+ Installation Instructions

STEP 1: Chalk lines on roof denoting two outside edges of the EcoFoot2+® according to project drawing. Place EcoFoot2+® Bases (A) in position.

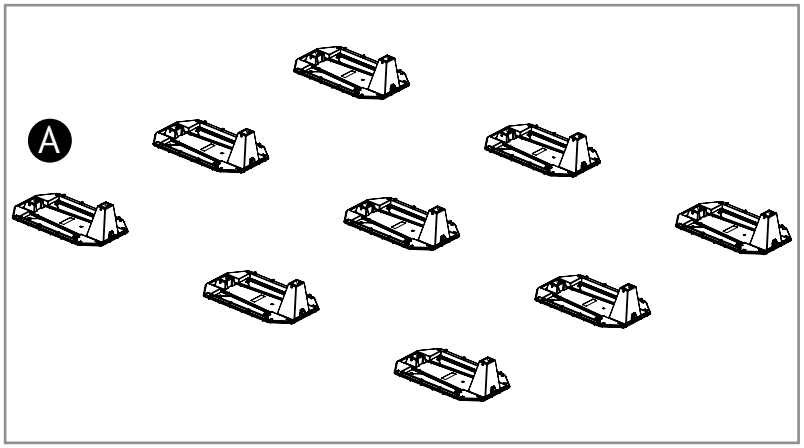

TIPS

- Ensure lines are square using 3-4-5 principle.
- As you build the array, panels will space Bases. Roughly place a few rows of Bases at a time so that they are within reach of final location.
- If installation requires 2 blocks or fewer on the north row, north row Bases can be turned around 180 degrees and tucked under the panel.
- If installation requires butyl, then butyl will be pre-installed on the bottom of the Base with protective tape. Ensure these butyl components are placed where specified in project drawing.

⚠ CAUTION

Remove protective tape after Step 6

STEP 2: Place Lower Clamp (B) and Upper Clamp (C) into EcoFoot2+ Base (A) as shown. Push Clevis Pin (D) completely into EcoFoot2+® Base(A) to secure Rocker.

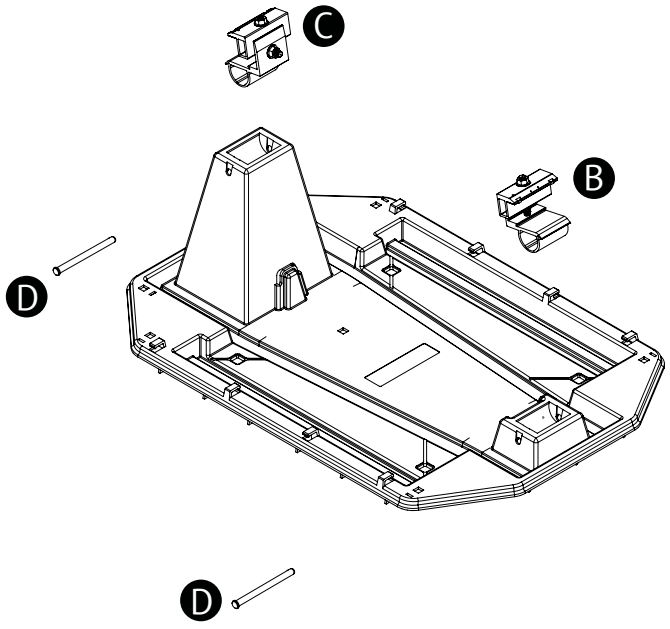

TIP

Only install Clamps where modules will rest. Refer to diagram below for correct placement and orientation of Clamps.

STEP 3: Place module onto EcoFoot2+® Base (A). Using a 1/2" deep socket, Torque nuts (F). Space modules 1/2“ apart using the alignment marks on the Clamps.

Torque Nuts (F) to 14 ft-lbs.

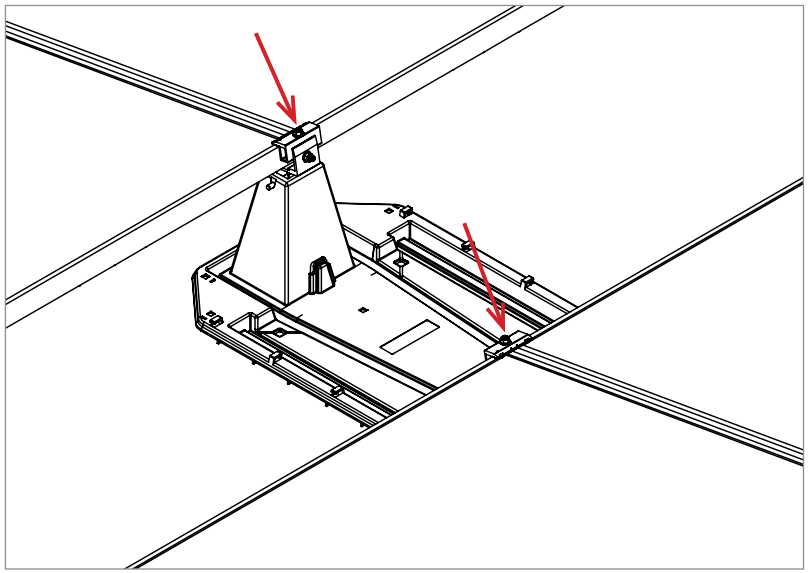

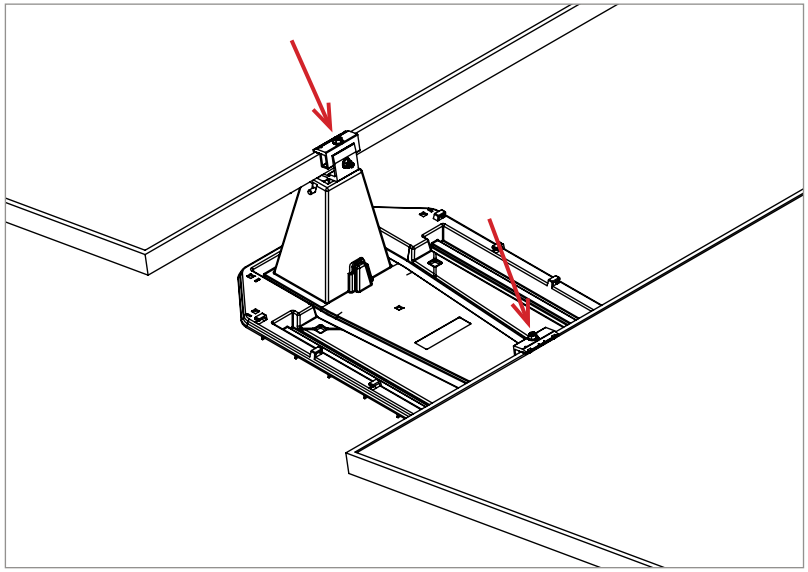

STEP 4: Place Ballast (not included) as required per PE Certified Ballast Plan provided.

NOTE;

In freeze/thaw environments, use concrete block with minimum compressive strength of 3,000psi (ref ASTM C1491-03 Standard Specifications for Concrete Roof Pavers).

EcoFoot2+® Ballast Block Placement

One Block

When using a single ballast block, lay the block flat in the center of EcoFoot2+ Base tray

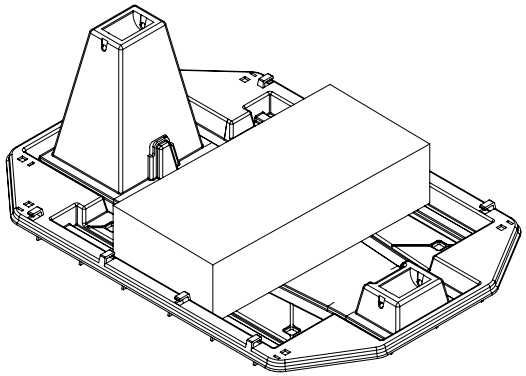

Two Blocks

When using two ballast blocks, lay the blocks flat in the EcoFoot2+ Base tray.

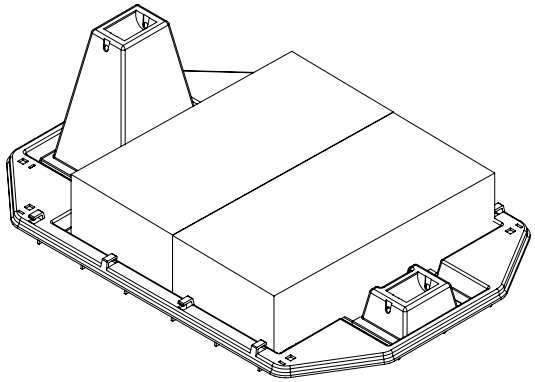

Three Blocks

When placing three ballast blocks in the EcoFoot2+ Base tray, lay one block flat and two on the long edge. This configuration helps to prevent blocks from becoming dislodged accidentally.

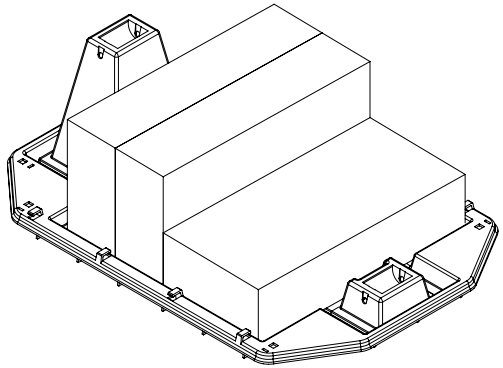

STEP 6: Route, connect, and secure conductors.

TIP:
Wire clips attached to the module flange (not included) can be used to dress conductors in a row of modules. Integrated snap features in the Base can be used to dress conductors bridging rows.

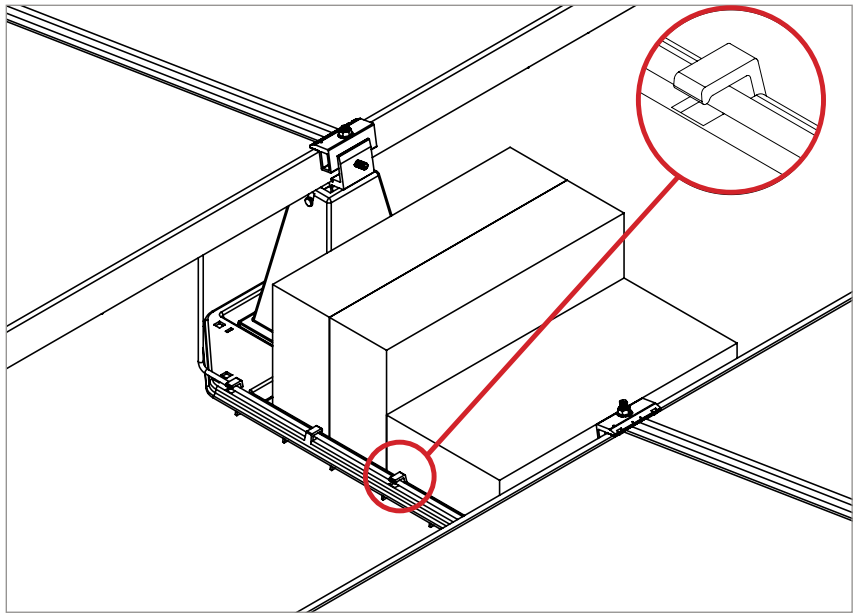

STEP 7: For systems that utilize mid supports, install them prior to installing wind deflectors in the next step. See Mid Support Installation section for instructions

STEP 8: Place Deflectors (E) into slot on EcoFoot2+® Base and attach to Rocker using Nut (F) provided. Using a 1/2" deep socket, torque Nut (F). Application of anti-seize on threaded stud is recommended.

Torque Nut to 14 ft-lbs.

NOTE:
For easier installation, when installing two deflectors in a single base, install the first deflector in the retention clip, install the second deflector between the other deflector and the base into the retention clip, and then slide both deflector slots over the threaded stud on the clamp and secure with rocker nut.

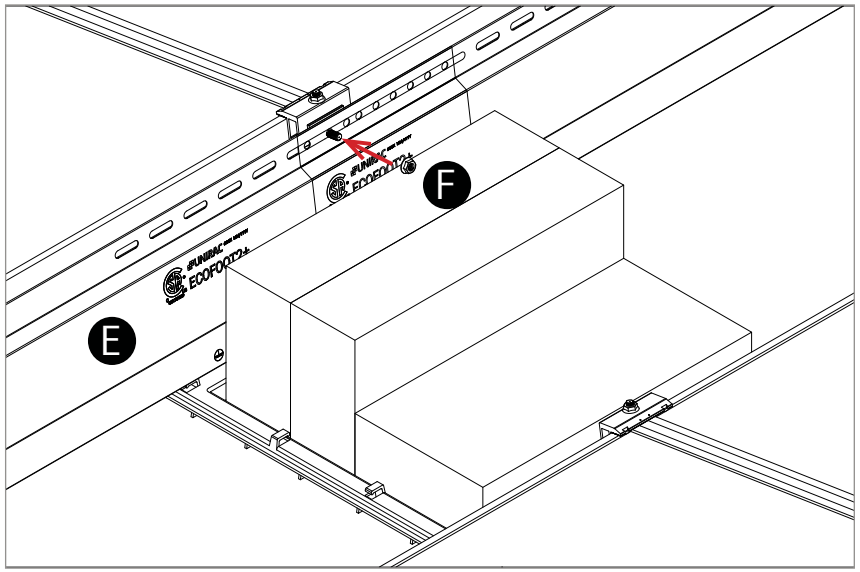

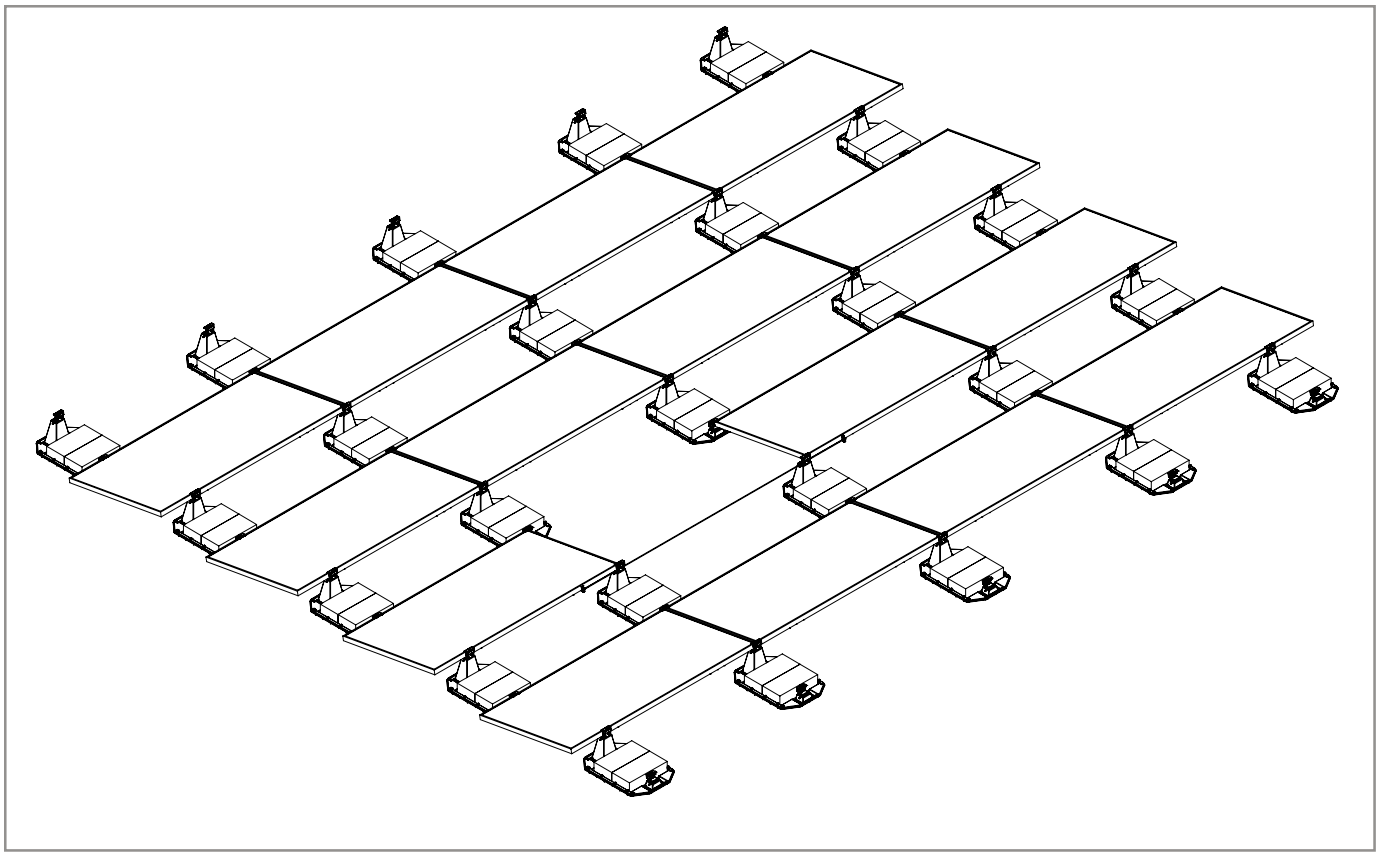

STEP 9: FINAL CHECK

Check all fasteners to ensure that the torque values are correct and that the modules are properly positioned.

MID SUPPORT KIT INSTALLATION

The Mid Support Kit is a non-standard item and only used in heavy load conditions or with light-duty panels. The design team at Unirac will indicate use when required.

INSTALLING LOWER MID-SUPPORT

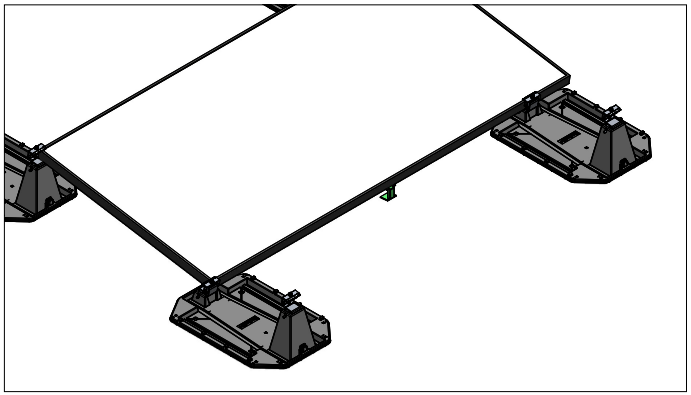

Locate module center point +/-1" using PV module cell lines.

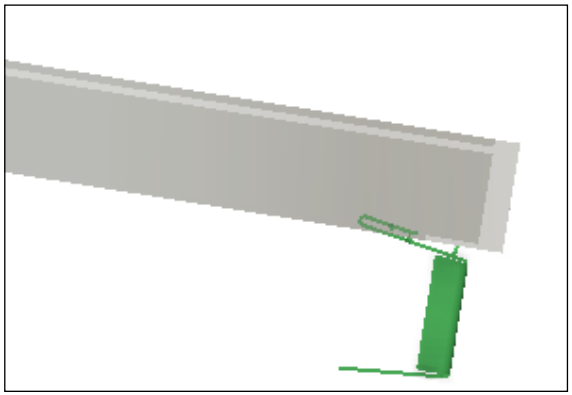

Slide the Lower Mid-Support slots onto module frame.

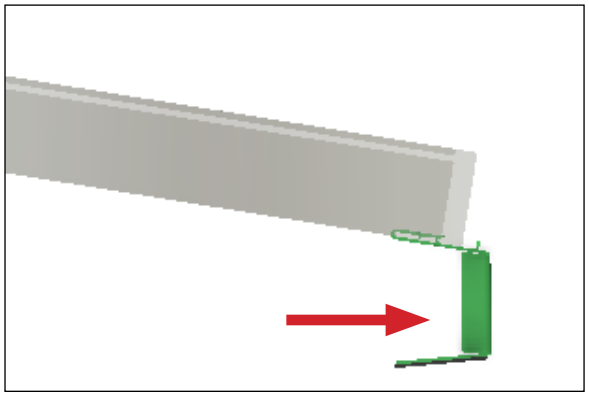

Pull outwards to sit flat on the roof.

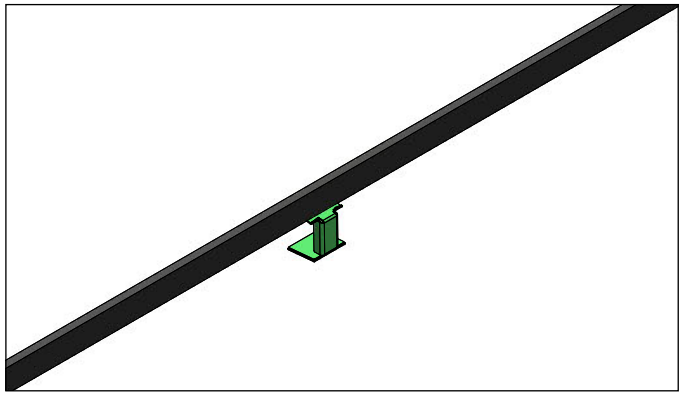

Ensure the Mid Support positioned flat on the roof.

INSTALLING UPPER MID-SUPPORT

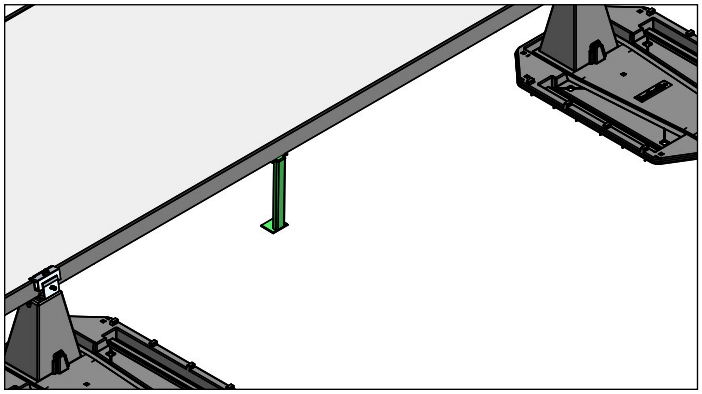

Locate module center point +/-1" using PV module cell lines.

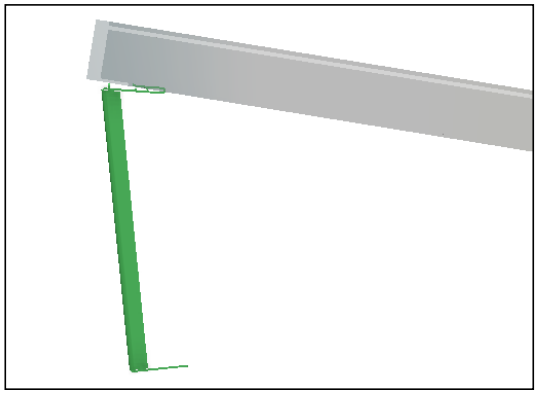

Slide the Lower Mid-Support slots onto module frame.

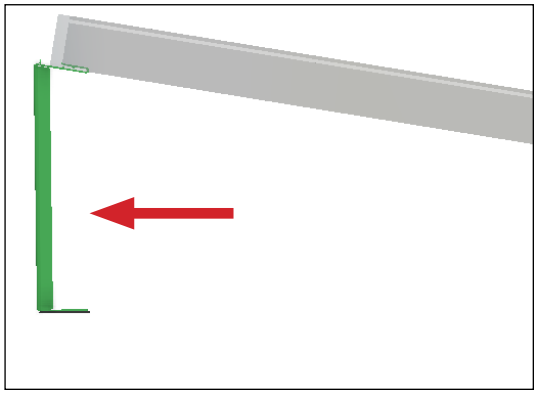

Pull outwards to sit flat on the roof.

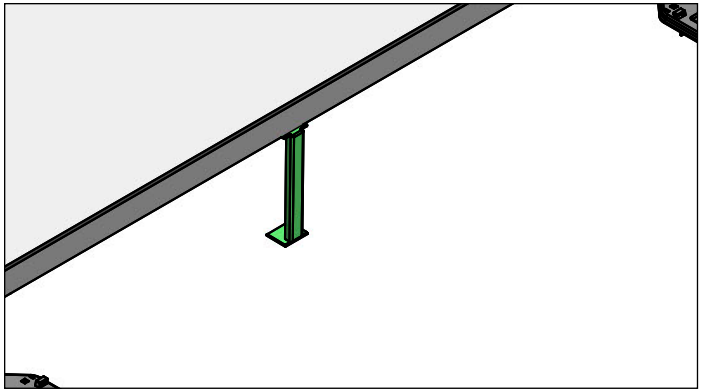

Ensure the Mid Support positioned flat on the roof.

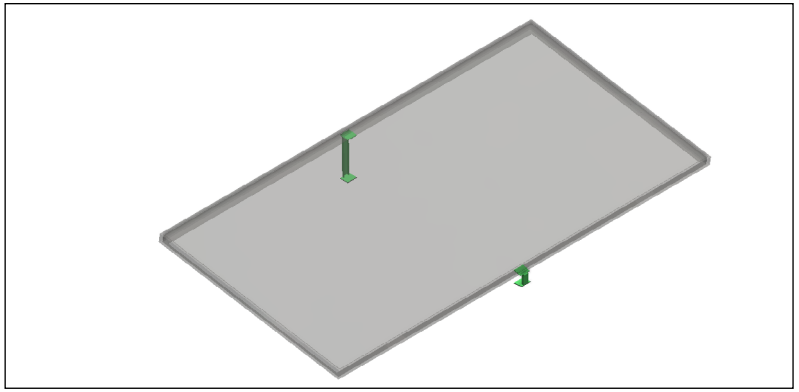

Typical view of Mid supports after installation

INSTALLATION OF CLAMPS FOR STEPPED ARRAY

In solar arrays, at the outer edge of the array often a single Base is clamped to two PV modules on one row and a single PV module on the opposite row, creating a stepped edge. Clamps securing a single PV module are positioned differently than Clamps securing two PV modules. Follow the Clamp positioning instructions below:

Example of one configuration of Stepped Array. At array edge, South Row has one less PV module than North Row, creating a stepped edge. Alternatively, Stepped Arrays may have the single PV module on the North Row.

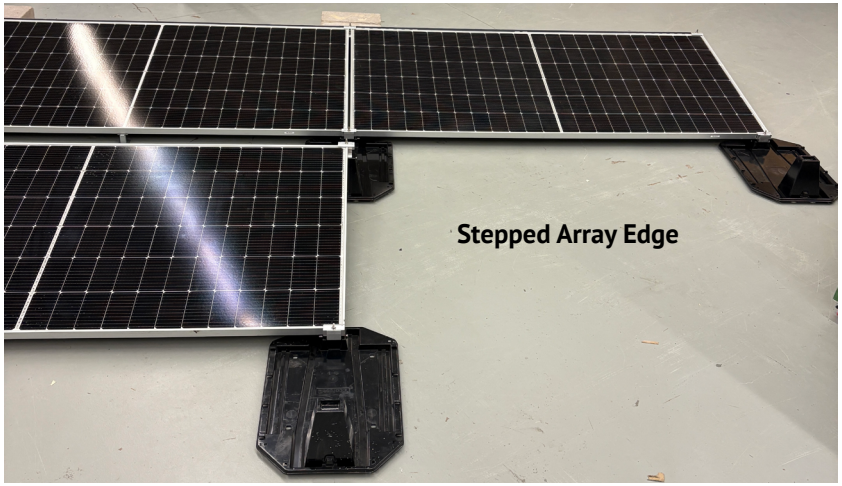

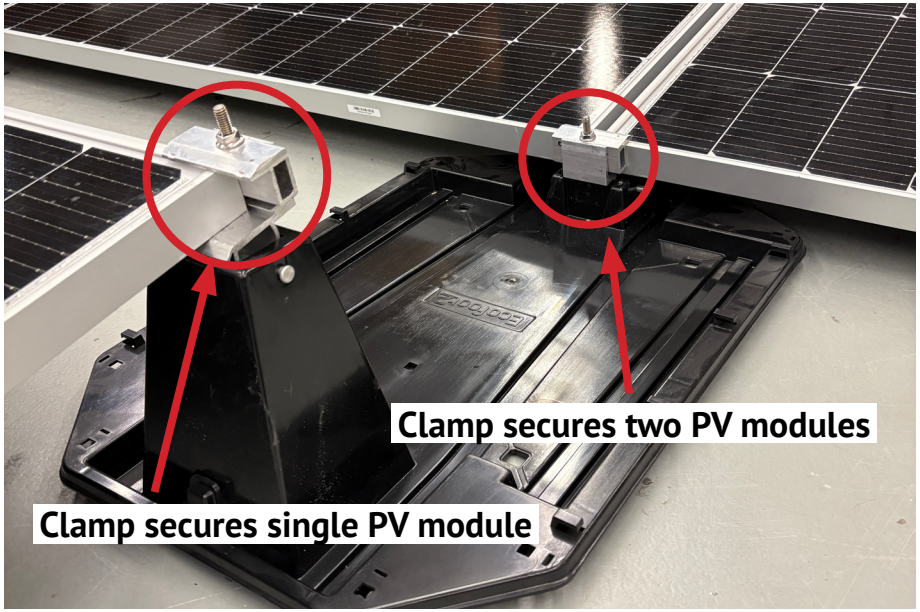

CLAMPING TO SECURE SINGLE MODULE OF STEPPED ARRAY

- Position module to align with positioning dot at outer edge of Clamp. This will engage 1 ¾" of Clamp with module frame. Align Base as needed to position Clamp. Base will be slightly out of parallel.

Torque Nut to 14 ft-lbs using a 1/2" deep socket.

⚠ CAUTION

- **For clamps in a stepped array that are only securing a single PV module, it is required to install a bonding jumper from that module's frame to the corresponding wind deflector in order to ensure that the PV module is properly grounded. Unirac recommends using a listed bonding jumper from the module return flange to the wind deflector, such as the Unirac Wire Bonding Clip, P/N: 008015S**
- **Grounding methods must comply with NEC and local code requirements.**

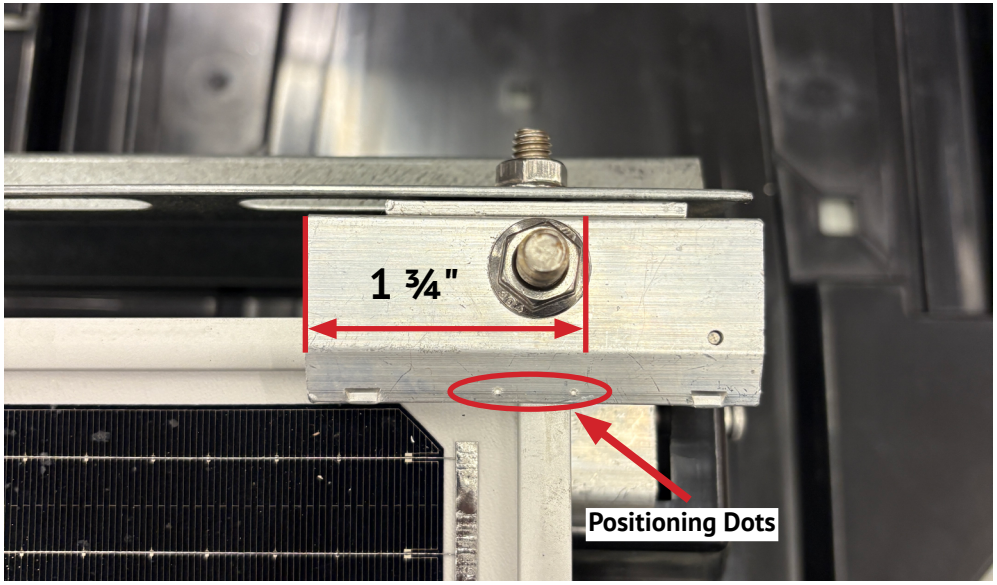

Clamp Securing Single PV Module

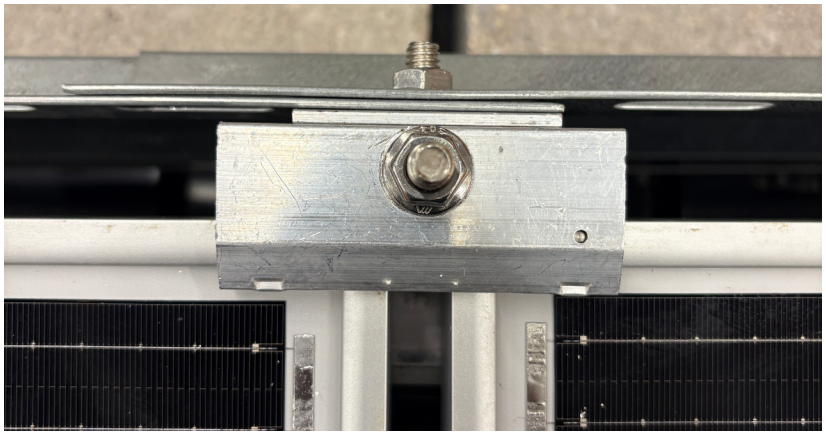

Clamp Securing Two PV Modules

CLAMPING TO SECURE TWO MODULES OF STEPPED ARRAY

Position Clamp in typical two-module clamping position and torque Nut.

Torque the nut to 14 ft-lbs.

MLPE BRACKET INSTALLATION

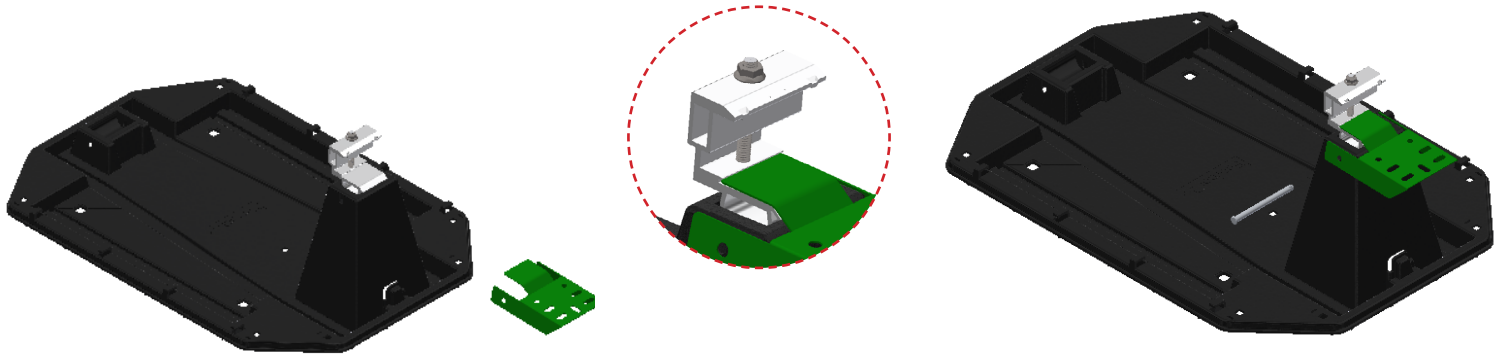

- Place EcoFoot MLPE Bracket on EcoFoot Universal Clamp as shown.
- Ensure MLPE Bracket should nest into Clamp's groove, as shown
- Insert Clevis Pin included with Universal Clamp Kit through EcoFoot MLPE Bracket, Base, and Clamp

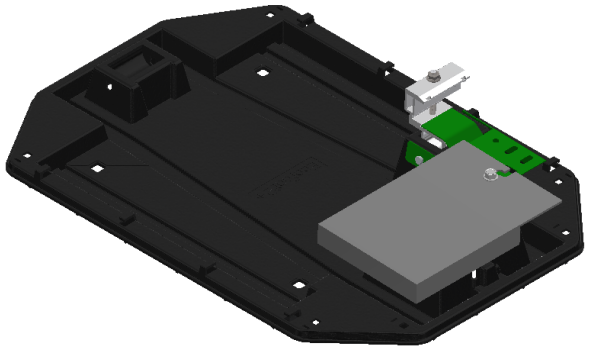

- Place MLPE on the MLPE Bracket and secure it with 5/16" serrated flange nut and bolt included in kit.

Torque Value 14 ft-lbs

Module Removal

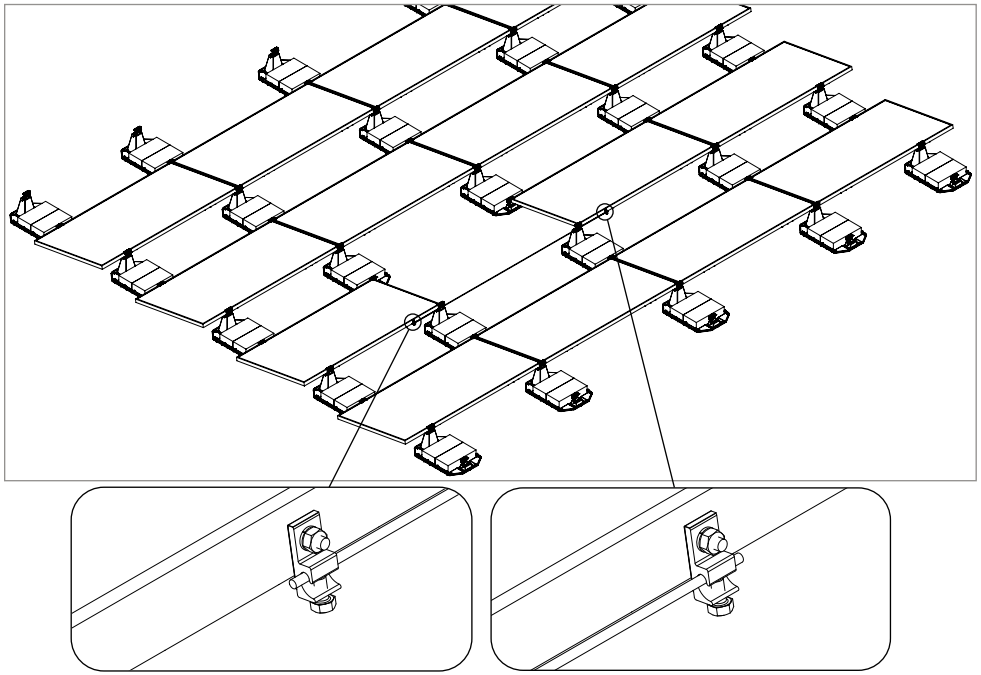

⚠ CAUTION

- **Module removal may disrupt the bonding path and could introduce the risk of electric shock.**
- **See Grounding and Bonding Paths section to determine when module removal may disrupt the bonding path.**
- **Follow Steps A through C to maintain the bonding path. Modules should only be removed by qualified persons in compliance with these instructions.**

If a module is to be removed from an array, the following steps must be taken.

STEP A: Determine module to be removed

Identify and mark the module to be removed.

STEP B: Install ground lug on adjacent modules

Install a WEEB Lug 6.7 on both modules adjacent to the module to be removed. Utilize the grounding hole on the frame of the module.

STEP C: Connect Bonding Jumper

Lay a bare #6 CU conductor into the two lay in lugs connected to the adjacent modules. Tighten lay-in lug terminal screw onto the conductor and torque to 7 ft- lbs. When wiring the array, keep bare copper from contacting bare aluminum.

The EcoFoot2+ ™ system is certified to UL 2703 for Grounding and Bonding when installed per the published installation instructions.

EcoFoot2+ ™ carries module-to-module ground bond through the Wind Deflector

Each row of modules/wind deflectors in an array of up to 400 modules must be grounded per the NEC and ANSI/NFPA 70 either through the designated ground hole in the Wind Deflector, or by drilling a ¼" ground hole into the Wind Deflector a minimum of ½" from any edge. One Ground Lug is required for every 400 modules connected within an array.

EcoFoot2+ ™ is intended to be used with PV modules that have a system voltage less than or equal to that allowable by NEC. For standard system grounding a minimum 10AWG, 105°C copper grounding conductor should be used to ground a system, according to the National Electric Code (NEC). It is the installer's responsibility to check local codes, which may vary.

Unirac recommends using #6 copper ground wire in conjunction with WEEB grounding devices such as the WEEB-LUG-6.7 or WEEB DSK516. Lugs are a single use component.

Other grounding methods must be reviewed and approved by a licensed master Electrician or Electrical Engineer and Authority Having Jurisdiction (AHJ).

Ground Hole with Lug Installed

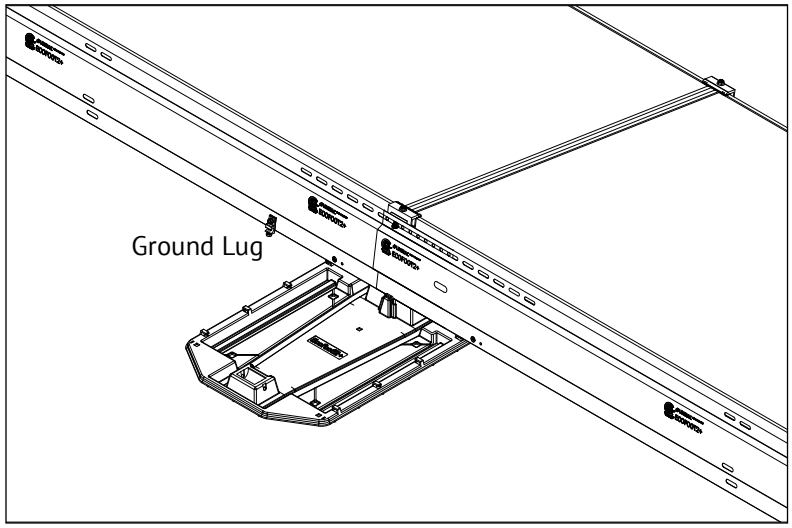

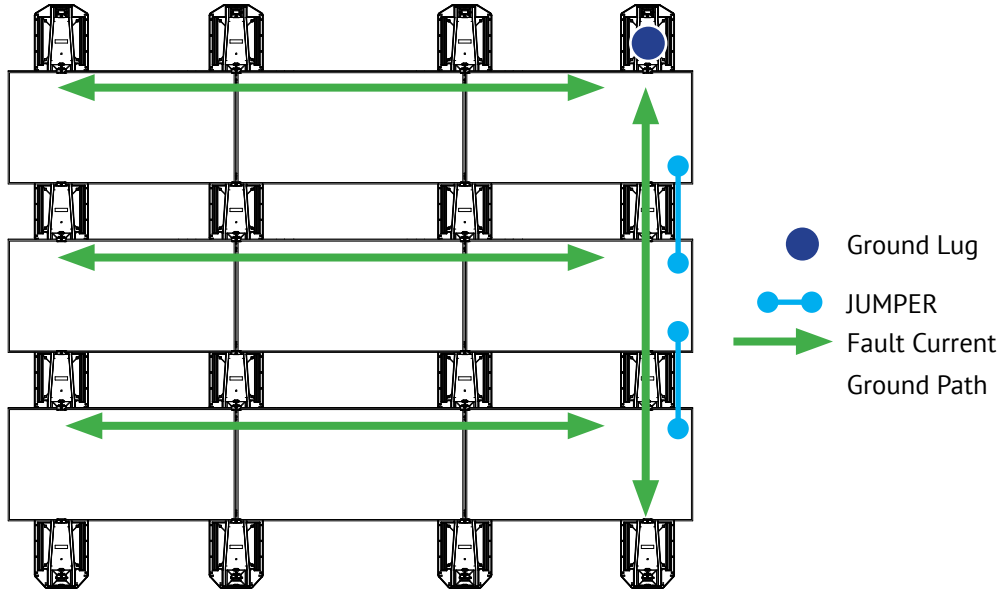

Wind Deflectors carry module-to-module East/West ground bond. Bonding jumpers carry row-to-row North/South ground bond.

UL2703 System Label: The label shown below is either stamped into the Wind Deflector or applied with an adhesive label

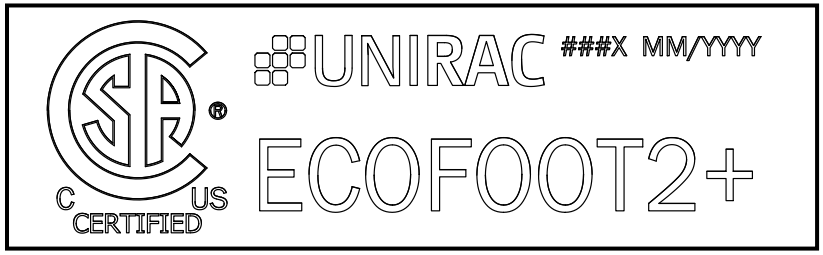

*The Date Code **A B C Y Z Z** shown above will appear on production parts, defined as follows:*

- ***A B C*** will be used to identify the source factory
- ***Y*** shall be the quarter of manufacture
- ***ZZ*** shall be the last two digits of the year of manufacture

MECHANICAL LOAD TEST

SYSTEM CERTIFICATION

The EcoFoot2+ ™ system has been certified and listed to the UL 2703 standard (Rack Mounting Systems and Clamping Devices for Flat-Plate Photovoltaic Modules and Panels). This standard includes electrical grounding, electrical bonding, mechanical load and fire resistance testing.

In conducting these tests, specific modules are selected for their physical properties so that the certifications can be broadly applied. The following lists the specific modules that were tested and the applicability of those certifications to other modules that might come onto the market. PV modules may have a reduced mechanical load rating, independent of the EcoFoot2+ ™ load rating. Please consult the PV module manufacturer's installation guide for more information.

In addition to UL 2703 certification, Unirac performs internal testing beyond the requirements of certification tests in order to establish system functional limits, allowable loads, and factors of safety. These tests include functional system tests, and destructive load testing.

MECHANICAL LOAD TEST MODULES

The modules selected for UL 2703 mechanical load testing were selected to represent the broadest range possible for modules on the market.
The tests performed cover the following basic module parameters:

- Frame thicknesses greater than or equal to 1.0 mm.
- Basic single and double wall frame profiles (some complex frame profiles could require further analysis to determine applicability).
- Clear and dark anodized aluminum frames.
- All installation configurations have achieved a minimum of 5psf design load in the downslope direction, tested with the Q Cells Q.PEAK DUO XL-G11.3/BFG module listed in this table

The following table lists the modules that have been mechanically load tested according to the UL 2703 standard

Module Manufacturer	Model / Series	Area [sq ft]	Design Loads Standard Configuration	Design Loads with Mid Supports [psf]	Design Loads with Mid Bays [psf]
Boviet Solar	BVM6612 M	20.89	11.8 up / 30 down	11.8 up / 50 down	N/A
Canadian Solar	CS6P-XXXM	17.31	30 up / 30 down	N/A	N/A
	CS6X-XXXP	20.65	15 up / 38 down	15 up / 50 down	N/A
	CS6U-XXXM	20.93	13.3 up / 25 down	13.3 up / 50 down	N/A
	CS3W-MB-AG	24.05	13.87 up / 13.8 down	13.87 up / 40.55 down	N/A
	CS3U-MB-AG	21.59	13.33 up / N/A down	13.33 up / 40 down	N/A
ET Solar	ET-M672XXXWW	20.86	15 up / 20 down	15 up / 40 down	N/A
Hansol	HSXXXTD-AN4	21.46	15 up / 20 down	15 up / 35 down	N/A
Heliene	72M-XXX	20.89	15 up / 25 down	15 up / 34 down	N/A
	144HC-xxx M10 SL Bifacial	27.79	13.75 up / 13.75 down	N/A	N/A

Module Manufacturer	Model / Series	Area [sq ft]	Design Loads Standard Configuration	Design Loads with Mid Supports [psf]	Design Loads with Mid Bays [psf]
Hyundai	HiS-MXXXTI	21.06	10.2 up / 30 down	10.2 up / 40 down	N/A
	HiS-MXXXRI	21.06	15 up / 20 down	15 up / 33.3 down	N/A
JA Solar	JAM72S10-XXX/MR	21.6	16.7 up / 27.2 down	16.7 up / 51.3 down	N/A
Jinko	JKMXXXP-60	17.62	30 up / 30 down	N/A	N/A
	JKMXXXP-72	20.89	15 up / 30 down	N/A	N/A
	JKMxxxM-72HL4-TV	27.78	17.93 up / 17.35 down	N/A	N/A
LG	LGXXXN2W-G4	21.10	15 up / 35 down	N/A	N/A
	LGXXXN2W-A5	22.31	15 up / 18.8 down	15 up / 30 down	N/A
Longi	LR6-72HPH-XXXM	21.48	15 up / 20 down	15 up / 30 down	N/A
	LR6-72HV-XXXM	20.86	15 up / 20 down	15 up / 40 down	N/A
	LR4-72-HBD-XXX	23.4	16.7 up / 20 down	16.7 up / 43.9 down	N/A
Q Cells	Q.PRO BFR-G4	17.98	15.1 up / 20 down	15.1 up / 55 down	N/A
	Q.PLUS L-G4.2	21.46	10.2 up / 30 down	10.2 up /33 down	N/A
	Q.PEAK DUO L-G8.3	23.06	17.16 up / 20.53 down	17.16 up / 46.88 down	N/A
	Q.PEAK DUO XL-G10.3 / BFG	24.93	16.7 up / 16.7 down	16.7 up / 43.5 down	N/A
	Q.PEAK DUO XL-G11.3/BFG	29.49	14.13 up / 14.27 down	14.13 up / 41.63 down	N/A
REC	RECXXXTP2	17.97	15 up / 26 down	15 up / 50 down	N/A
	RECXXXTP2S 72	21.60	15 up / 15.5 down	15 up / 20 down	N/A
	RECXXXTP2S 72 XV	21.6	15 up / 25 down	15 up / 34 down	N/A
ReneSola	JCXXXM-24/Ab	20.89	15 up / 30 down	N/A	N/A
	JCXXXM-24/Bb	20.89	30 up / 30 down	N/A	N/A
S-Energy	SNXXXP-15	21.00	10 up / 20 down	10 up / 30 down	N/A
Silfab	SLGXXXM	21.00	13.1 up / 13.9 down	13.1 up / 30 down	N/A
	SLA-P XXX	17.58	13.3 up / 30 down	13.3 up /40 down	N/A
	SIL-XXXNU	21.94	17.7 up / 27.2 down	17.7 up / 46.7 down	N/A
SolarWorld	SW Poly Pro	18.04	30 up / 30 down	N/A	N/A
Talesun	TP672M-XXX	20.91	12 up / 20 down	12 up / 30 down	N/A

Module Manufacturer	Model / Series	Area [sq ft]	Design Loads Standard Configuration	Design Loads with Mid Supports [psf]	Design Loads with Mid Bays [psf]
Trina	TSM-XXX PA05.08	17.64	30 up / 30 down	N/A	N/A
	TSM-XXXDE14A(II)	20.93	15 up / 30 down	15 up / 40 down	N/A
	TSM-xxxNEG19RC.20	29.10	N/A	N/A	9.65 up / 36.30 down
	DE18M(II)	25.94	18.92 up / 19.01 down	18.92 up / 37.85 down	N/A
VSUN	VSUNXXX-72MH	21.38	13.33 up / 20 down	13.33 up / 50 down	N/A
Yingli	YGE 60	17.58	30 up / 30 down	N/A	N/A
ZN Shine	ZXM6-72	21.4	13.33 up / 16.27 down	13.33 up / 40 down	N/A
	ZXM7-SHLDD144	27.96	16.57 up/ 12.6 down	16.57 up/ 37.08 down	N/A

The following table lists the modules that have been mechanically load tested according to the CSA TIL NO. A-40 standard

Module Manufacturer	Model / Series	Area [sq ft]	Design Loads Standard Configuration	Design Loads with Mid Supports [psf]	Design Loads with Mid Bays [psf]
Jinko	JKMxxxM-72HL4-TV	27.78	17.93 up / 17.35 down	N/A	N/A
Trina	TSM-xxxNEG19RC.20	29.10	N/A	N/A	9.65 up / 36.30 down

Electrical Bonding and Grounding Test Modules

The list below is not exhaustive of compliant modules but shows those that have been evaluated and found to be electrically compatible with the EcoFoot2+ ™ system.

Manufacture	Module Model / Series
Aionrise	AION60G1 AION72G1
AMPS	AMPS-xxxN-108BB AMPS-xxxP-54BB
APTOS SOLAR	DNA-108-MFN10-xxxW DNA-120-BF26 DNA-120-MF10 DNA-120-MF26 DNA-144-BF10-xxxW-DG
Astronergy	ASM6612P Series
Auxin	AXN10Mxxx AXNG1M SERIES
Axitec	AC-xxxMBT/144V AC-xxxMH/144V AC-xxxTGB/144TS AXIbipremium XXL HC MW: AXIpremium XXL HC:
BenQ Solar	PMxxxP01
Bila Solar	AA550US-6x24GG
Boviet	BVM661(0/2) M (BB)-xxx BVM661(0/2) M-xxx BVM661(0/2) P -xxx BVM661(0/2) P-xxx (BB) BVM6610M-xxxS-H-HC BVM6610M-xxxS-H-HC-BF
Canadian Solar	CS1Y-MS CS3N MS CS3U-MB-AG CS3U-MS-AG

Manufacture	Module Model / Series
Canadian Solar(Cont.)	CS3W-MB-AG CS3W-MS CS3W-PB-AG CS3Y-MB-G CS6.1-54TM-H CS6.2-48TM-xxxH CS6K-xxx(M/P) CS6P-xxx(M/P) CS6R-MS-HL CS6U-xxx(M/P) CS6U-xxx(M/P) (1500V), CS6W-MB-AG CS6W-xxx-TB-AG CS6X-xxx(M/P)
CertainTeed	CTM10xxxHC11-09 (430-465 W) CTTCxxxHC12-08 CTxxxHC11-06
EMMVEE	ExxxHCBG144-T ExxxHCBT144-T
Energy America	ZLK-xxx
Es Foundry	ES-DN8-H54B-xxx ES-DN8-H72-xxx ES-DP8-H54B-xxx ES-DP8-H72-xxx
ET Solar	ET-(M/P)660xxx(WW/WB/BB)
Freevolt	PVGraf
Gstar Solar	GSD7S54T-xxxBT GSP7G54M(H)
Hansol	HSxxxTD-AN4 HSxxxTD-AN3

Manufacture	Module Model / Series
Hansol (Cont.)	HSxxxUD-AN1
Heliene	108HC M10 SL All Black Module 132HC M10 SL Monofacial Module 144HC M10 NTYP SL Bifacial Module 144 HC M10 SL-Bifacial 144HC M10 SL Monofacial 60(P/M)-xxx 60M-xxx (BLK) HOME PV 72M-xxx (BLK) 72P-xxx HSPE-132HC-M10-SL-Monofacial
Hyundai	HiN-TxxxNF(BK) HiN-TxxxNI HiS-(M/S)xxx (RI/TI) HiS-SxxxGI HiS-SxxxKI HiS-SxxxYH(BK)
Imperial Star	ISM7-SHDD120-xxx/M
INDEPWR Solar	iPWR-M10-54BX2S-xxxW iPWR-M10-60BX2S-xxxW
JA Solar	JAM54D41-xxx/MB JAM54S31 xxx/MR JAM72D10 xxx/MB JAM72D30 xxx/MB (2278mm or 2285mm) JAM72S01-xxx/PR JAM72S09-xxx/PR JAM72S10/MR JAM72S10-xxx/PR JAM72S30xxx/MR JAM78D10 /MB

- Unless otherwise noted, all modules listed above include all wattages and specific models within that series. Variable wattages are represented as "xxx"
- Items in parenthesis are those that may or may not be present in a compatible module's model ID
- Slashes "/" between one or more items indicates that either of those items may be the one that is present in a module's model ID
- The frame profile must not have any feature that might interfere with the bonding devices that are integrated into the racking system
- Use with a maximum over current protection device OCPD of 30A
- Please see EcoFoot2+™ information at unirac.com to ensure the exact solar module selected is approved for use with EcoFoot2+™
- Listed models can be used to achieve a Class A fire system rating, for low slope applications, when modules fire typed 1, 2, 3 with a metal frame, 19, 22, 25, and modules typed 29, 30 or 38.

Electrical Bonding and Grounding Test Modules

The list below is not exhaustive of compliant modules but shows those that have been evaluated and found to be electrically compatible with the EcoFoot2+ ™ system.

Manufacture	Module Model / Series
JA Solar (Cont.)	JAP72S01-xxx/SC JAP72S09-xxx/SC
Jinko Solar	JKMxxxM-6RL3-B JKMxxxM-72HL-V JKMxxxM-7RL3-TV JKMxxxN-72HL4-BDV (30mm & 35mm Frame Height) JKMxxxN-72HL4-TV JKMxxxP-60/72
LA Solar	LSxxxBF (530-550 watt range) LSxxxBL (410 watt) LSxxxBL (430-450 watt range) LSxxxBL (530-550 watt range) LSxxxHC (430-450 watt range)
LG Electronics	LGxxx(A/M/N/Q)1C-A6 LGxxx(M/N/Q)1K-A6 LGxxx(N/Q)1C-N5 LGxxx(N/Q)1C-V5 LGxxx(N/Q)1K-V5 LGxxx(N/S)1C- (A5/G4) LGxxx(N/S)2W-(A5/B3/G4) LGxxxN1K-A5 LGxxxN1K-L5 LGxxxN2T-E6 LGxxxN2T-L5 LGxxxN2W-E6 LGxxxN2W-L5 LGxxxNX(W/T)-V5 LGxxxQ1K-N5, LGxxxQAC-A6 LGxxxQAK-A6

Manufacture	Module Model / Series
LONGi	LR4-72-HBD-xxx LR4-72HBD xxxM LR4-72HPH LR5-54-HPB-xxxM LR5-54HTB xxxM LR5-66HPH LR5-72HBD LR5-72HPH LR6-72HPH-xxxM LR6-72HV-xxxM LR6-72-xxxM LR8-54HGBB
Maxeon	SPR-MAX6-xxx SPR-MAX6-xxx-BLK
Meyer Burger	Black, White
Mission Solar Energy	MSExxxHT0B MSExxxSX5K MSExxxSX5T MSExxxSX9R MSExxxSX9Z MSH10-xxxHN4G MSH10-xxxHN4G-DC11 MSH10-xxxHT4T MSI10-xxxHN4G MSI10-xxxHT4G MSI10-xxxHT4T MSN10xxxHT4T MSX10-xxxHN0B
mSolar	TXI10-xxx108BB
NE Solar	NESE xxx 72MHB-M10 NESE xxx 72THB-M10

Manufacture	Module Model / Series
NE Solar (Cont.)	NESE xxx 72MHT-M10 NESE xxx-66THB-G12R
Optivolt	OPT10MxxxB
Panasonic	EVPVxxx(K/PK/H) EVPVxxxHK EVPVxxxHK2
Philadelphia Solar	PS-M144(HCBF) PS-MNB108(HCBF)-xxxW PS-MNB144(HCBF)-xxxW
Phono Solar	PSxxxM8GFH-24TNH
Q Cells	B.LINE (PRO or PLUS) BFR G4.1 xxx Q.(PLUS/PEAK) (L/BFR)-G4.1 xxx Q.(PLUS/PEAK) (L /BFR)-G4.2 xxx Q.(PRO or PLUS) BFR-G4.1 xxx Q.PEAK (BLK or BFR) G4.1/TAA xxx Q.PEAK BLK G4.1 xxx Q.(PRO or PLUS) G4 xxx Q.PEAK DUO BLK ML-G10+/AC Q.PEAK DUO BLK ML-G10.C1+/AC Q.PEAK DUO-G10(+) Q.PEAK DUO XL-(G10.2, G10.3, G10.c or G10.d) Q.PEAK DUO XL-(G10.3 or G10.d)/BFG Q.TRON BLK M-G2(.H1)(.F1)(.C1)+/AC Q.PLUS L G4.2, Q.PRO BFR-G4/G4.3 xxx Q.PRO EC-G4.4 xxx, Q.PEAK DUO BLK-(G9(+) or G10(+)) Q.PEAK DUO L-(G5.1, G5.2, G6, G6.1, G6.2, G6.3, G7.1, G7.2, G8, G8.1, G8.2 or G8.3) Q.PLUS DUO L-(G5.1or G5.2) Q.TRON BLK M-G2+

- Unless otherwise noted, all modules listed above include all wattages and specific models within that series. Variable wattages are represented as "xxx"
- Items in parenthesis are those that may or may not be present in a compatible module's model ID
- Slashes "/" between one or more items indicates that either of those items may be the one that is present in a module's model ID
- The frame profile must not have any feature that might interfere with the bonding devices that are integrated into the racking system
- Use with a maximum over current protection device OCPD of 30A
- Please see EcoFoot2+™ information at unirac.com to ensure the exact solar module selected is approved for use with EcoFoot2+™
- Listed models can be used to achieve a Class A fire system rating, for low slope applications, when modules fire typed 1, 2, 3 with a metal frame, 19, 22, 25, and modules typed 29, 30 or 38.

Electrical Bonding and Grounding Test Modules

The list below is not exhaustive of compliant modules but shows those that have been evaluated and found to be electrically compatible with the EcoFoot2+ ™ system.

Manufacture	Module Model / Series
Q Cells(Cont.)	Q.PEAK DUO BLK ML-G10.C+ Q.PEAK DUO BLK ML-G10.D+ Q.PEAK DUO BLK ML-G10.D1+/AC Q.PEAK DUO ML-G12S.P3 / BFG Q.PEAK DUO XL-G11S.3 / BFG Q.PEAK DUO XL-G11S.B3 / BFG Q.PEAK DUO XL-G11S.L3 / BFG Q.TRON BLK M-G2+/AC Q.TRON BLK M-G2+ AC Q.TRON BLK M-G2.C+ Q.TRON BLK M-G2.C1+/AC Q.TRON BLK M-G2.C3+/AC Q.TRON BLK M-G2.C4+/AC Q.TRON BLK M-G2.D+ Q.TRON BLK M-G2.D1+/AC Q.TRON BLK M-G2.D2+/AC Q.TRON BLK M-G2.F+ Q.TRON BLK M-G2.F1+/AC Q.TRON BLK M-G2.H+ Q.TRON BLK M-G2.H1+/AC Q.TRON BLK M-G2+ SERIES Q.TRON BLK M-G2.Y+ Q.TRON M-G2+ SERIES Q.TRON ML-G3.3/BFG Q.PEAK DUO BLK ML-G10.XY+/AC (where "X" = any letter between A to W, where "Y" = any number between 1 to 9.)
REC	RECxxx(TP, PE, TP2 or NP) RECxxx(TP, PE, TP4 or NP2) (BLK) RECxxxTP2 (BLK/BLK2) RECxxxAA

Manufacture	Module Model / Series
REC (Cont.)	RECxxxAA 72 RECxxxAA Black RECxxxAA Pro M RECxxxAA Pure RECxxxAA Pure 2 RECxxxAA Pure R RECxxxAA Pure-RX RECxxxAA Pure-RX RECxxxAA PURE-RX-DC RECxxxNP3 Black RECxxxTP2S 72
Regitec Solar	RMHT54/xxxAB2
ReneSola	JCxxxM -24(Ab or Bb), RS6-xxxNBG-E3
Risen Solar	RSM144-6-xxxBMDG
Runergy	HY-DH132N11 HY-DH96N11B
SEG Solar	SEG-xxx-BTA-BG SEG-xxx-BTB-BG SEG-xxx-BTD-BG
S-Energy	SL40-60MAI/MBI/MCI-xxxV SNxxx(M/P)-10 (40T) SNxxxP-15, SNxxx(M/P)-10
Seraphim	SRP-xxx-BMD-HV SRP-xxx-BTA-BG SRP-xxx-BTB-BG SRP-xxx-BTD-BG SRP-xxx-BTE-BG

Manufacture	Module Model / Series
Silfab	SIL-xxx BG SIL-xxx BK SIL-xxx HC+ SIL-xxx HM SIL-xxx HN SIL-xxxNU SIL-xxx QD SIL-xxx QM SIL-xxx XM SIL-xxx XM+ SLA-(P, M or X) xxx SLG-(P, M or X) xxx SSA-(P or M) xxx SSG-(P or M) xxx
Sirius	ELNSM54M-HC-BF Series ELNSM54M-HC Series
Sirius PV	ELNSM54M-HC-N
Solar4America	S4A550-144MH10STT S4Axxx-108MH10BB
Solar Space	SS8-54HDB-xxx-N SS8-54HD-xxx-N SS8-72HD-xxx-M SS8-72HD-xxx-N SSA-48HD-xxx-N SSA-54HDB-xxx-N SSA-54HD-xxx-N SSA-48HDB-xxx-N
SolarWorld	Sunmodule Plus SW Mono Sunmodule Protect SW Mono SW Poly Pro, SW Poly 2.5

- Unless otherwise noted, all modules listed above include all wattages and specific models within that series. Variable wattages are represented as "xxx"
- Items in parenthesis are those that may or may not be present in a compatible module's model ID
- Slashes "/" between one or more items indicates that either of those items may be the one that is present in a module's model ID
- The frame profile must not have any feature that might interfere with the bonding devices that are integrated into the racking system
- Use with a maximum over current protection device OCPD of 30A
- Please see EcoFoot2+™ information at unirac.com to ensure the exact solar module selected is approved for use with EcoFoot2+™
- Listed models can be used to achieve a Class A fire system rating, for low slope applications, when modules fire typed 1, 2, 3 with a metal frame, 19, 22, 25, and modules typed 29, 30 or 38.

Electrical Bonding and Grounding Test Modules

The list below is not exhaustive of compliant modules but shows those that have been evaluated and found to be electrically compatible with the EcoFoot2+ ™ system.

Manufacture	Module Model / Series
Sonali	SS-M-360 to 390 & 440 to 460 Series SS-M-430 to 460 BiFacial Series
Sunket Solar	SKT580M10-144S2
SunPower	A440-COM-MLSD
SunPro	SPDGxxx-120M12
Sunpro Power	SPDGxxx-N108M10 SPDGxxx-N144M10
Talesun	(+/- Hipro Mxxx+ or PID ZERO) TP672(M or P) TD6I72M TD7G72M TM3G48M TM3G54M TM7G60M TM7G72M TP6F72M TP6F72M(H)
Tesla	Tesla Solar Panel TSP-415/TSP-420 TxxxH TxxxS
Thornova	TS-BBT54(xxx) TS-BGT72(xxx)

Manufacture	Module Model / Series
Trina Solar	DE09.05 DE18M(II) DEG15HC.20(II) DEG15MC.20(II) DEG18MC.20(II) TSM-DE15H(II) TSM-DE15M(II) TSM-NE09RH.05 TSM-NEG9RH.25 TSM-xxxDD14A(II) TSM-xxxDE14A(II) TSM-xxx PA05.08 TSM-xxxPD14 TSM-xxxPE14A
Vikram	PARADEA VSMDH.72.AAA.05 PREXOX VSMDHT.60.AAA.05 VSMDHT.72.AAA.05
VSUN	VSUNxxx-108MH VSUNxxx-120BMH VSUNxxx-144BMH VSUNxxx-144BMH-DG VSUNxxx-60M VSUNxxx-72MH VSUNxxx-72PH VSUNxxxN-108BMH-BB VSUNxxxN-108BMH-BB (SoftPaw) VSUNxxxN-108BMH-DG-BB VSUNxxxN-120BMH-BB (SoftPaw) VSUNxxxN-132BMHR
Waaree	Bi-55-xxx BiN-08-xxx

Manufacture	Module Model / Series
Yingli	YLxxxC-30b YLxxxP-29b
ZN Shine	ZXM6-60 ZXM6-72 ZXM6-NHLDD144 ZXM7-SHDB144 ZXM7-SHLDD144 ZXM7-UHLDD108 ZXM7-UHLDD144 ZXP6-72

- Unless otherwise noted, all modules listed above include all wattages and specific models within that series. Variable wattages are represented as "xxx"
- Items in parenthesis are those that may or may not be present in a compatible module's model ID
- Slashes "/" between one or more items indicates that either of those items may be the one that is present in a module's model ID
- The frame profile must not have any feature that might interfere with the bonding devices that are integrated into the racking system
- Use with a maximum over current protection device OCPD of 30A
- Please see EcoFoot2+™ information at unirac.com to ensure the exact solar module selected is approved for use with EcoFoot2+™
- Listed models can be used to achieve a Class A fire system rating, for low slope applications, when modules fire typed 1, 2, 3 with a metal frame, 19, 22, 25, and modules typed 29, 30 or 38.